SONY

VIDEOCASSETTE RECORDER

BVW-D75PS

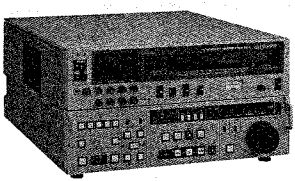

BETACAM SP

MAINTENANCE MANUAL

Volume 2 1st Edition

Serial No. 10001 and Higher

このマニュアルに記載されている事柄の著作権は当社にあり，説明内容は機器購入者の使用を目的としています。
従って，当社の許可なしに無断で複写したり，説明内容(操作，保守等）と異なる目的で本マニュアルを使用することを禁止します。

The material contained in this manual consists of information that is the property of Sony Corporation and is intended solely for use by the purchasers of the equipment described in this manual.
Sony Corporation expressly prohibits the duplication of any portion of this manual or the use thereof for any purpose other than the operation or maintenance of the equipment described in this manual without the express written permission of Sony Corporation.

Le matériel contenu dans ce manuel consiste en informations qui sont la propriété de Sony Corporation et sont destinées exclusivement à l'usage des acquéreurs de l'équipement décrit dans ce manuel.
Sony Corporation interdit formellement la copie de quelque partie que ce soit de ce manuel ou son emploi pour tout autre but que des opérations ou entretiens de l'équipement à moins d'une permission écrite de Sony Corporation.

Das in dieser Anleitung enthaltene Material besteht aus Informationen, die Eigentum der Sony Corporation sind, und ausschließlich zum Gebrauch durch den Käufer der in dieser Anleitung beschriebenen Ausrüstung bestimmt sind.
Die Sony Corporation untersagt ausdrücklich die Vervielfältigung jeglicher Teile dieser Anleitung oder den Gebrauch derselben für irgendeinen anderen Zweck als die Bedienung oder Wartung der in dieser Anleitung beschriebenen Ausrüstung ohne ausdrückliche schriftliche Erlaubnis der Sony Corporation.

TABLE OF CONTENTS

Volume 1

1. INSTALLATION
2. SERVICE INFORMATION
(This section will be available as a supplement.)
3. PERIODIC CHECK AND MAINTENANCE
(This section will be available as a supplement.)
4. REPLACEMENT OF MAJOR PARTS
(This section will be available as a supplement.)
5. TAPE RUN ALIGNMENT
(This section will be available as a supplement.)
6. GENERAL INFORMATION FOR ALIGNMENT
(This section will be available as a supplement.)
7. POWER AND CONTROL SYSTEM ALIGNMENT
(This section will be available as a supplement.)
8. SERVO SYSTEM/DT ALIGNMENT
(This section will be available as a supplement.)
9. AUDIO/TIME CODE ALIGNMENT
(This section will be available as a supplement.)
10. VIDEO SYSTEM ALIGNMENT
(This section will be available as a supplement.)
11. OVERALL VIDEO ALIGNMENT
(This section will be available as a supplement.)

Volume 2

12. BLOCK DIAGRAM

OVERALL (1/5) Video Block ····· 12-1
OVERALL (2/5) Audio Block ····· 12-2
OVERALL (3/5) System Control Block ····· 12-3
OVERALL (4/5) Dynamic Tracking Block ····· 12-4
OVERALL (5/5) Servo Block ····· 12-5
MDM-5P BOARD (1/5) ····· 12-6
MDM-5P BOARD (2/5) ····· 12-7
MDM-5P BOARD (3/5) ····· 12-8
MDM-5P BOARD (4/5) ····· 12-9
MDM-5P BOARD (5/5) ····· 12-10
RP-53P BOARD ····· 12-11
TBC-17P BOARD (1/2) ····· 12-12
TBC-17P BOARD (2/2) ····· 12-13
DIF-11P BOARD (1/5) (2/5) ····· 12-14
DIF-11P BOARD (3/5) (4/5) (5/5) ····· 12-15
AFM-8 BOARD ····· 12-16
AUDIO BLOCK DIAGRAM (1/2) ····· 12-17
AUDIO BLOCK DIAGRAM (2/2) ····· 12-18
SS-48DP BOARD (1/2) ····· 12-19
SS-48DP BOARD (2/2) ····· 12-20
DR-118B BOARD ····· 12-21
DYNAMIC TRACKING ····· 12-22

13. PRINTED WIRING BOARD LAYOUT

CIRCUIT CONFIGURATION ····· 13-1
MDM-5P BOARD ····· 13-2
RP-53P BOARD ····· 13-4
CP-187 BOARD ····· 13-5
SWC-11 BOARD ····· 13-5
TBC-17P BOARD ····· 13-6
DIF-11P BOARD ····· 13-8
SIF-17 BOARD ····· 13-10
DUS-359/490 BOARD ····· 13-10
CP-175/185 BOARD ····· 13-11
AFM-8 BOARD ····· 13-12
AU-145 BOARD ····· 13-13
AU-146P BOARD ····· 13-14
AU-147P BOARD ····· 13-15
HP-47 BOARD ····· 13-16
VR-110/111 BOARD ····· 13-16
DP-126/127 BOARD ····· 13-16
DP-128/129 BOARD ····· 13-17
SWC-10 BOARD ····· 13-17
DP-156 BOARD ····· 13-17
VR-119 BOARD ····· 13-17
SS-48DP BOARD ····· 13-18
DT-28/29 BOARD ····· 13-20
DR-118B BOARD ····· 13-21
DD-17 BOARD ····· 13-22
RM-82 BOARD ····· 13-23
PTC-42/43/49/54/55 BOARD ····· 13-23
PD-56 BOARD ····· 13-23
DS-31 BOARD ····· 13-23
TR-73 BOARD ····· 13-23
DE-15 BOARD ····· 13-23
LP-57 BOARD ····· 13-23
PC-62 BOARD ····· 13-23
CL-25 BOARD ····· 13-23
AC-107 BOARD ····· 13-23
KY-188D BOARD ····· 13-24
KY-205 BOARD ····· 13-24
KY-206 BOARD ····· 13-24
DP-136 BOARD ····· 13-25
PTC-39 BOARD ····· 13-25
PT-9 BOARD ····· 13-25
SWC-12P BOARD ····· 13-26
MB-394 BOARD ····· 13-27

14. SCHEMATIC DIAGRAM

CIRCUIT CONFIGURATION ····· 14-1
MDM-5P BOARD (1/8) ····· 14-3
MDM-5P BOARD (2/8) ····· 14-5
MDM-5P BOARD (3/8) ····· 14-7
MDM-5P BOARD (4/8) ····· 14-9
MDM-5P BOARD (5/8) ····· 14-11
MDM-5P BOARD (6/8) ····· 14-13
MDM-5P BOARD (7/8) ····· 14-15
MDM-5P BOARD (8/8) ····· 14-17
RP-53P BOARD (1/5) ····· 14-19
RP-53P BOARD (2/5) ····· 14-21
RP-53P BOARD (3/5) ····· 14-23
RP-53P BOARD (4/5) (5/5) ····· 14-25
PA-109 BOARD ····· 14-27
TBC-17P BOARD (1/6) ····· 14-29
TBC-17P BOARD (2/6) ····· 14-31
TBC-17P BOARD (3/6) ····· 14-33
TBC-17P BOARD (4/6) ····· 14-35
TBC-17P BOARD (5/6) ····· 14-37
TBC-17P BOARD (6/6) ····· 14-39
CP-187 BOARD ····· 14-41
SWC-11 BOARD ····· 14-41
DIF-11P BOARD (1/5) ····· 14-43
DUS-490 BOARD ····· 14-43
DIF-11P BOARD (2/5) ····· 14-45
DIF-11P BOARD (3/5) ····· 14-47
DUS-359 BOARD ····· 14-47
DIF-11P BOARD (4/5) ····· 14-49
DIF-11P BOARD (5/5) ····· 14-51
SIF-17 BOARD ····· 14-53
CP-175 BOARD ····· 14-55
CP-185 BOARD ····· 14-57
AFM-8 BOARD (1/4) ····· 14-59
AFM-8 BOARD (2/4) (3/4) (4/4) ····· 14-61
AU-145 BOARD (1/3) ····· 14-63
AU-145 BOARD (2/3) ····· 14-65
AU-145 BOARD (3/3) ····· 14-67
AU-146P BOARD (1/5) ····· 14-69
AU-146P BOARD (2/5) ····· 14-71
AU-146P BOARD (3/5) ····· 14-73
AU-146P BOARD (4/5) ····· 14-75
AU-146P BOARD (5/5) ····· 14-77
AU-147P BOARD (1/4) ····· 14-79
AU-147P BOARD (2/4) ····· 14-81

DUS-475 BOARD ····· 14-81
AU-147P BOARD (3/4) ····· 14-83
AU-147P BOARD (4/4) ····· 14-85
DUS-465 BOARD ····· 14-85
HP-47 BOARD ····· 14-85
VR-110 BOARD ····· 14-87
VR-111 BOARD ····· 14-87
DP-126 BOARD ····· 14-89
DP-127 BOARD ····· 14-91
DP-128 BOARD ····· 14-93
DP-129 BOARD ····· 14-93
SWC-10 BOARD ····· 14-95
DP-156 BOARD ····· 14-97
VR-119 BOARD ····· 14-97
SS-48DP BOARD (1/10) ····· 14-99
SS-48DP BOARD (2/10) ····· 14-101
SS-48DP BOARD (3/10) ····· 14-103
SS-48DP BOARD (4/10) ····· 14-105
SS-48DP BOARD (5/10) ····· 14-107
SS-48DP BOARD (6/10) ····· 14-109
EQ-42 BOARD ····· 14-109
SS-48DP BOARD (7/10) ····· 14-111
SS-48DP BOARD (8/10) ····· 14-113
SS-48DP BOARD (9/10) ····· 14-115
SS-48DP BOARD (10/10) ····· 14-117
DT-28 BOARD (1/4) ····· 14-119
SR-52 BOARD ····· 14-119
DT-28 BOARD (2/4) (3/4) ····· 14-121
DT-28 BOARD (4/4) ····· 14-123
DT-29 BOARD ····· 14-123
DR-118B BOARD (1/4) ····· 14-125
DR-118B BOARD (2/4) ····· 14-127
DR-118B BOARD (3/4) ····· 14-129
DR-118B BOARD (4/4) ····· 14-131
DD-17 BOARD ····· 14-131
TR-73 BOARD ····· 14-133
RM-82 BOARD ····· 14-133
PD-56 BOARD ····· 14-133
DS-31 BOARD ····· 14-133
PTC-42 BOARD ····· 14-135
PTC-43 BOARD ····· 14-135
PTC-49 BOARD ····· 14-135
PTC-54 BOARD ····· 14-135
PTC-55 BOARD ····· 14-135
CL-25 BOARD ····· 14-137
LP-57 BOARD ····· 14-137
PC-62 BOARD ····· 14-137
AC-107 BOARD ····· 14-137
KY-188D BOARD ····· 14-139
KY-205 BOARD ····· 14-139
KY-206 BOARD ····· 14-139
DP-136 BOARD ····· 14-139
PT-9 BOARD ····· 14-139
PTC-39 BOARD ····· 14-139
SWC-12P BOARD ····· 14-141
MB-394 BOARD (1/8) ····· 14-143
MB-394 BOARD (2/8) ····· 14-145
MB-394 BOARD (3/8) ····· 14-147
MB-394 BOARD (4/8) ····· 14-149
MB-394 BOARD (5/8) ····· 14-151
MB-394 BOARD (6/8) ····· 14-153
MB-394 BOARD (7/8) ····· 14-155
MB-394 BOARD (8/8) ····· 14-157
MB-394 BOARD (1/5) ····· 14-159
MB-394 BOARD (2/5) ····· 14-161
MB-394 BOARD (3/5) ····· 14-163
MB-394 BOARD (4/5) ····· 14-165
MB-394 BOARD (5/5) ····· 14-167
FRAME A (1/3) ····· 14-169
FRAME A (2/3) ····· 14-171
FRAME A (3/3) ····· 14-173
FRAME B ····· 14-175

15. SEMICONDUCTOR PIN ASSIGNMENT

16. REPLACEABLE PART AND OPTIONAL FIXTURE

16-1. NOTES ON REPAIR PARTS ····· 16-1
16-2. EXPLODED VIEW ····· 16-2
Reel Chassis (1) ····· 16-4
Reel Chassis (2) ····· 16-6
Drum and Cleaning Roller Assembly ····· 16-8
Head and Pinch Press Assembly ····· 16-10
Rail and Slider Assembly ····· 16-12
Threading Ring ····· 16-14
Threading Gear Box Assembly ····· 16-16
Tension Regulator Assembly ····· 16-18
Reel chassis (3) ····· 16-20
Cassette Compartment Assembly ····· 16-22
Chassis and Ornamental Panel Block ····· 16-24
Card Rack Block ····· 16-26
Front Panel Block ····· 16-28
Function Control Panel Block ····· 16-30
Rear Panel Block ····· 16-32

16-3. ELECTRICAL PARTS LIST ····· 16-35
AC-107 BOARD ····· 16-35
AFM-8 BOARD ····· 16-35
AU-145 BOARD ····· 16-42
AU-146P BOARD ····· 16-47
AU-147P BOARD ····· 16-53
CL-25 BOARD ····· 16-59
CP-175 BOARD ····· 16-60
CP-185 BOARD ····· 16-62
CP-187 BOARD ····· 16-63
DD-17 BOARD ····· 16-63
DE-15 BOARD ····· 16-64
DIF-11P BOARD ····· 16-64
DP-126 BOARD ····· 16-75
DP-127 BOARD ····· 16-76
DP-128 BOARD ····· 16-77
DP-129 BOARD ····· 16-78
DP-136 BOARD ····· 16-78
DP-156 BOARD ····· 16-79
DR-118B BOARD ····· 16-79
DS-31 BOARD ····· 16-84
DT-28 BOARD ····· 16-84
DT-29 BOARD ····· 16-88
DUS-359 BOARD ····· 16-89
DUS-465 BOARD ····· 16-89
DUS-475 BOARD ····· 16-89
DUS-490 BOARD ····· 16-89
EX-286 BOARD ····· 16-90
EX-347 BOARD ····· 16-90
HP-47 BOARD ····· 16-90
KY-188D BOARD ····· 16-91
KY-205 BOARD ····· 16-94
KY-208 BOARD ····· 16-94
LP-57 BOARD ····· 16-95
MB-394 BOARD ····· 16-95
MDM-5P BOARD ····· 16-96
PC-62 BOARD ····· 16-113
PD-56 BOARD ····· 16-113
PT-9 BOARD ····· 16-113
PTC-39 BOARD ····· 16-114
PTC-42 BOARD ····· 16-114
PTC-43 BOARD ····· 16-114
PTC-49 BOARD ····· 16-114
PTC-54 BOARD ····· 16-114
PTC-55 BOARD ····· 16-115
RM-62 BOARD ····· 16-115
RP-53P BOARD ····· 16-115
SIF-17 BOARD ····· 16-122
SS-48DP BOARD ····· 16-123
SWC-10 BOARD ····· 16-132
SWC-11 BOARD ····· 16-133
SWC-12P BOARD ····· 16-133
TBC-17P BOARD ····· 16-134
TR-73 BOARD ····· 16-144
VR-110 BOARD ····· 16-145
VR-111 BOARD ····· 16-146
VR-119 BOARD ····· 16-146
FRAME ····· 16-147
PACKING MATERIALS & SUPPLIED ACCESSORIES ····· 16-148
OPTIONAL FIXTURE ····· 16-149

SECTION 12
BLOCK DIAGRAM

OVERALL BLOCK DIAGRAM (1/5)
VIDEO BLOCK

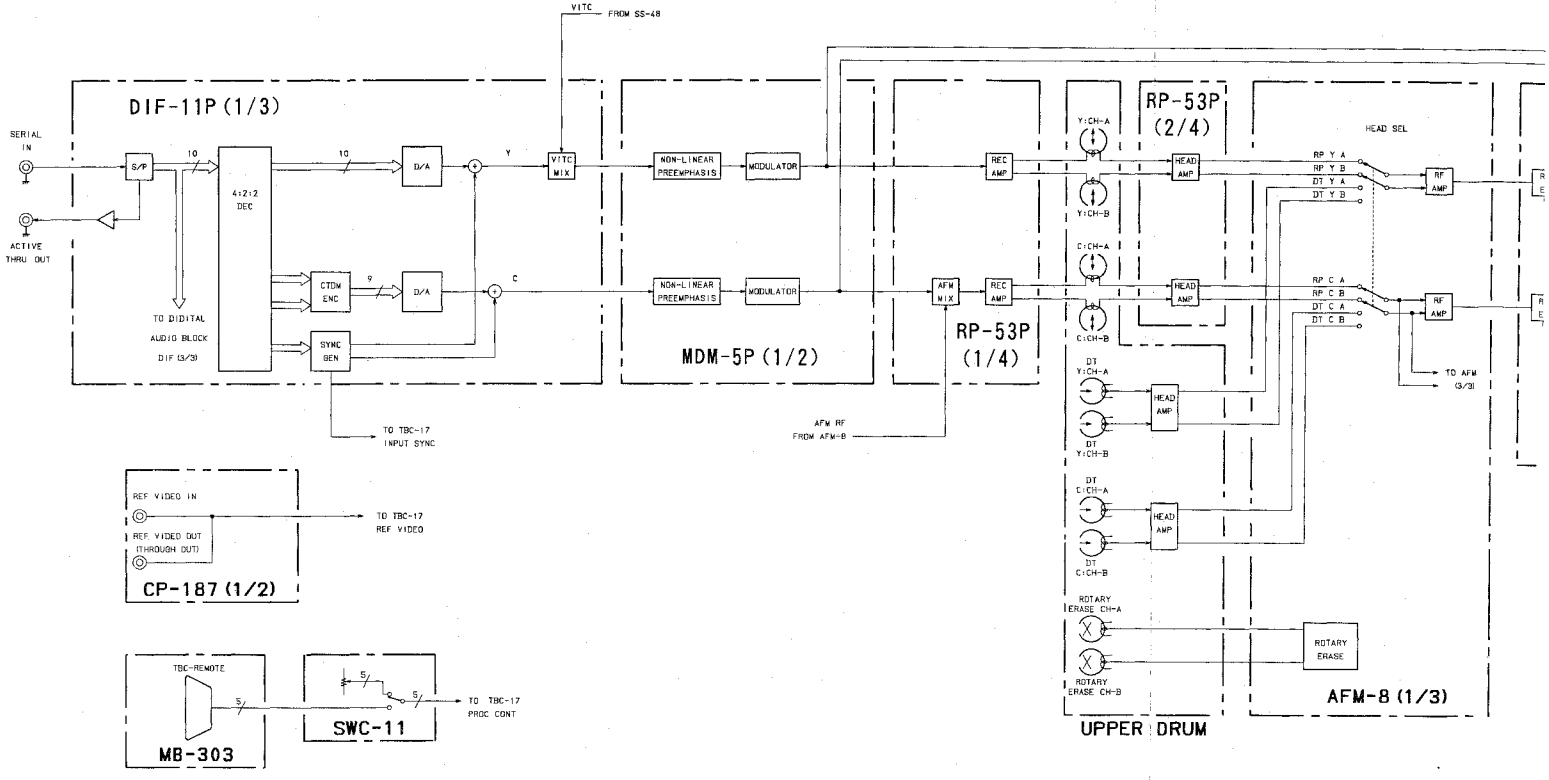

12-1

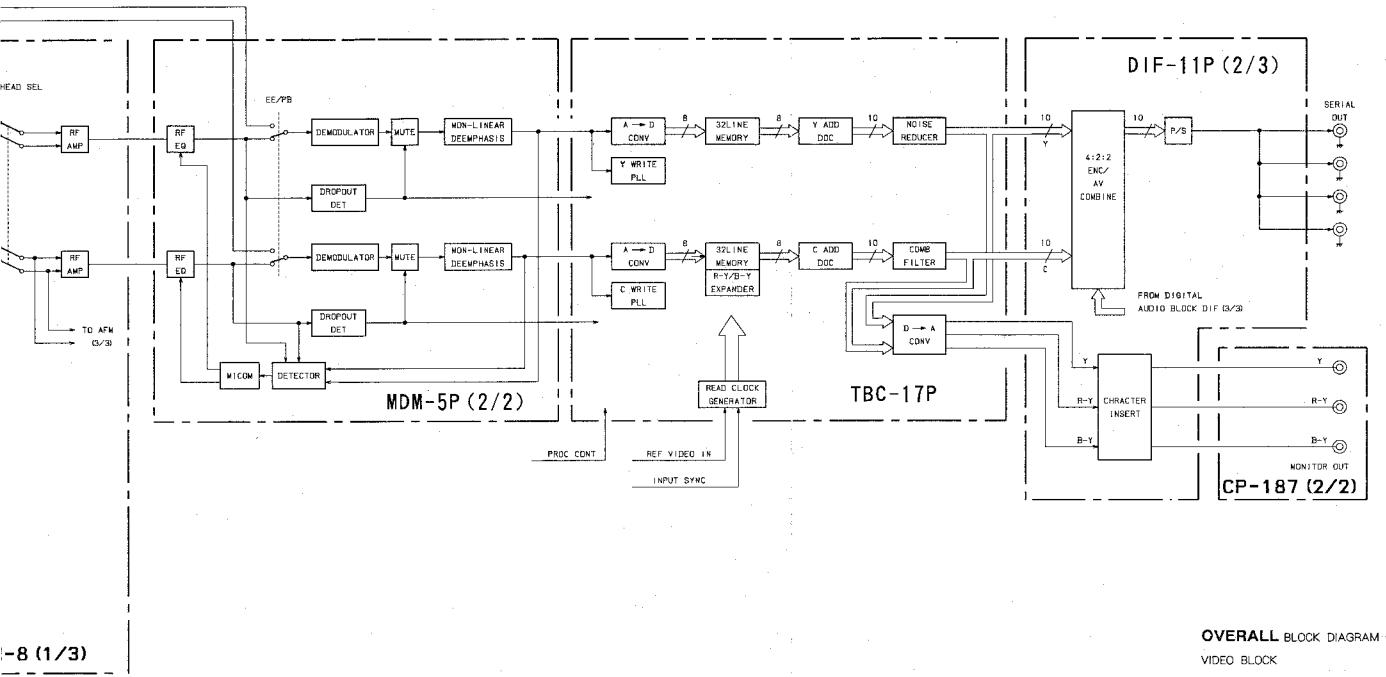

OVERALL BLOCK DIAGRAM **(1/5)**

VIDEO BLOCK

BVW-D75PS : #10001-

12-1

OVERALL BLOCK DIAGRAM (2/5)
AUDIO BLOCK

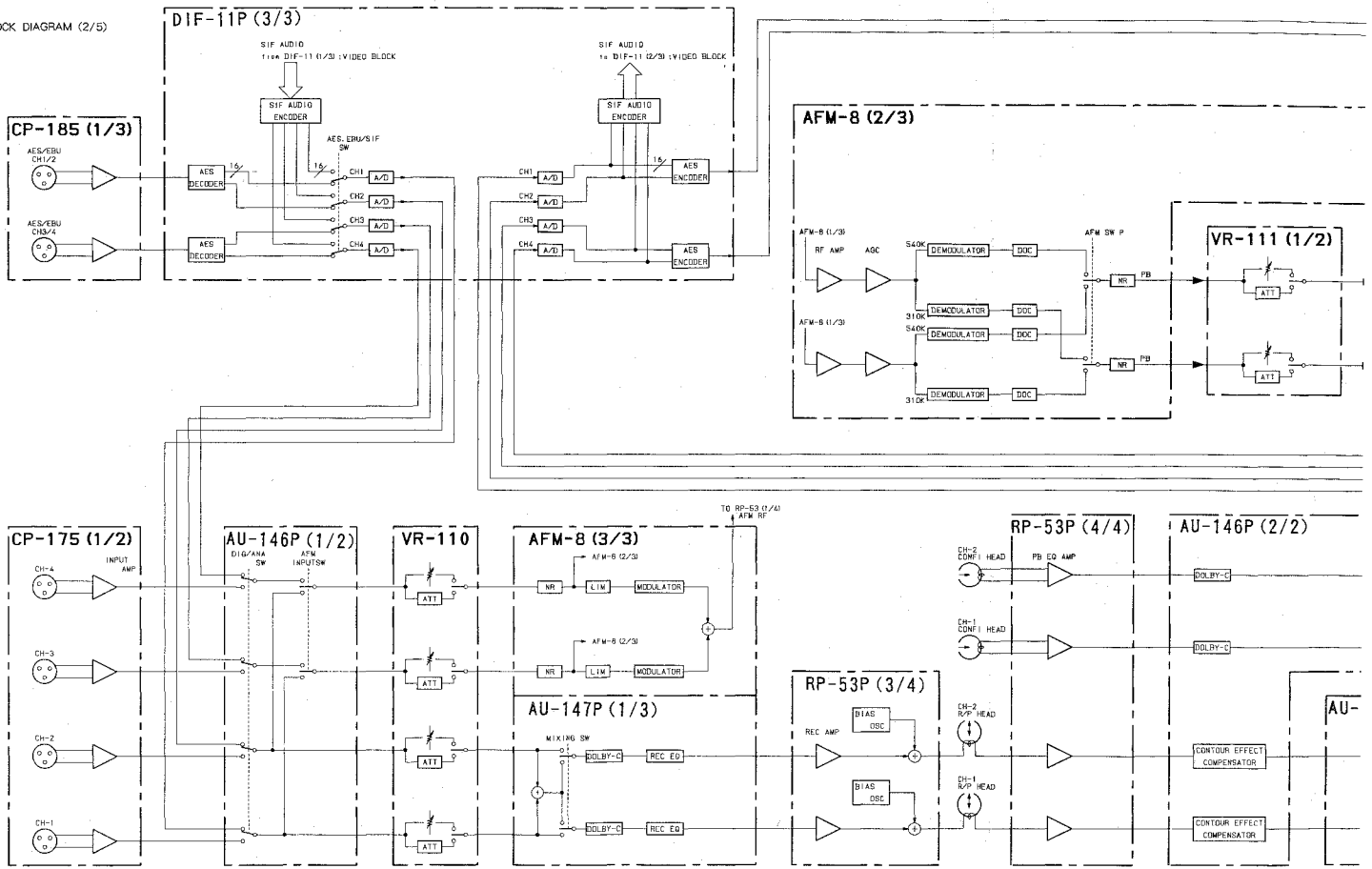

12-2

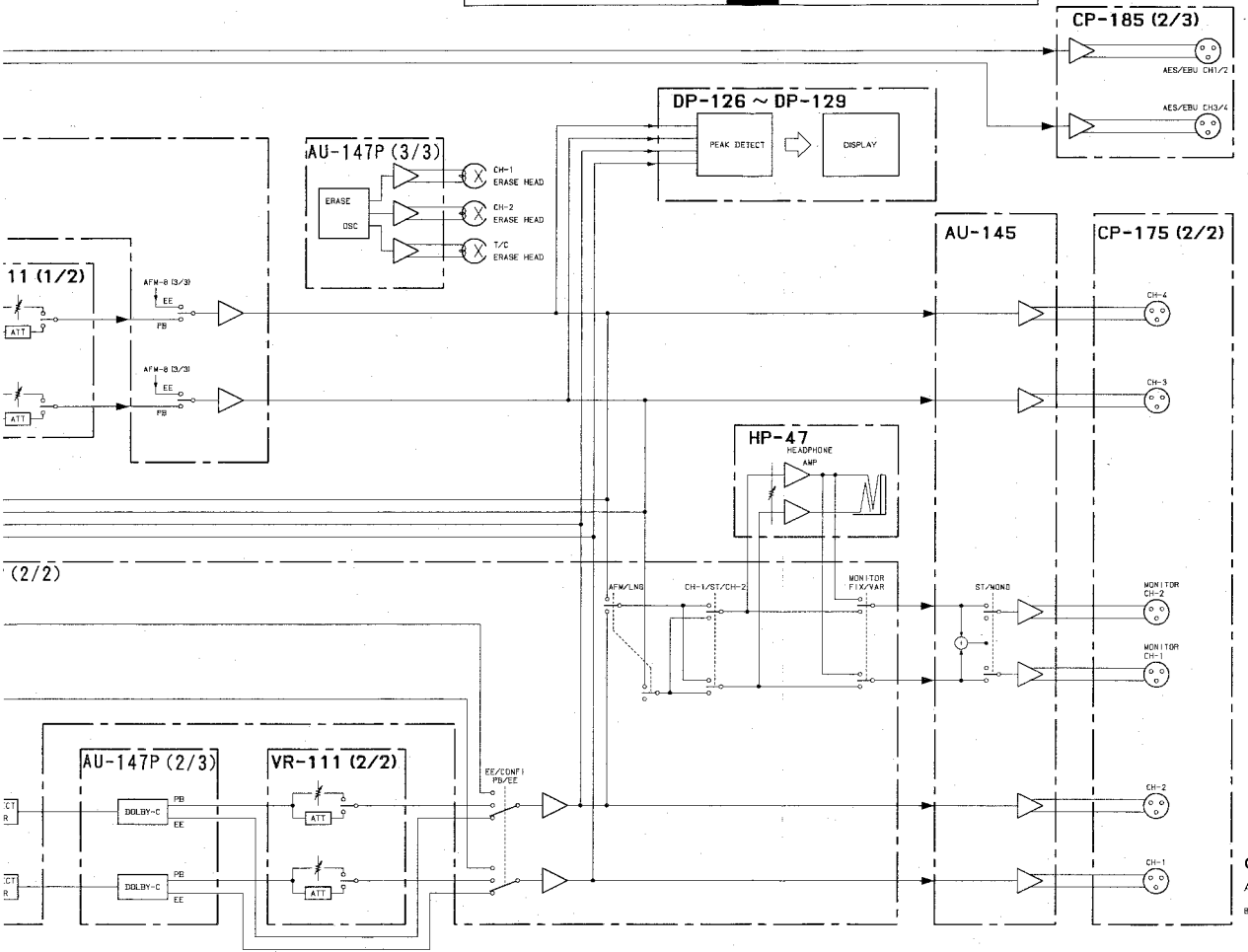

OVERALL BLOCK DIAGRAM **(2/5)**

AUDIO BLOCK

BVW-D75PS : #10001-

12-2

OVERALL BLOCK DIAGRAM (3/5)
SYSTEM CONTROL BLOCK

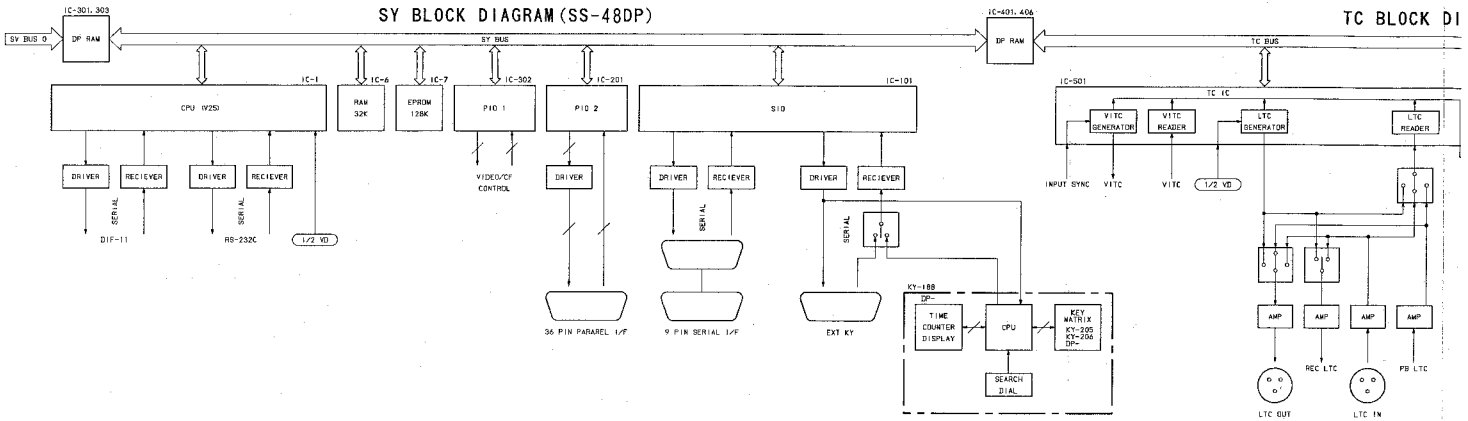

12-3

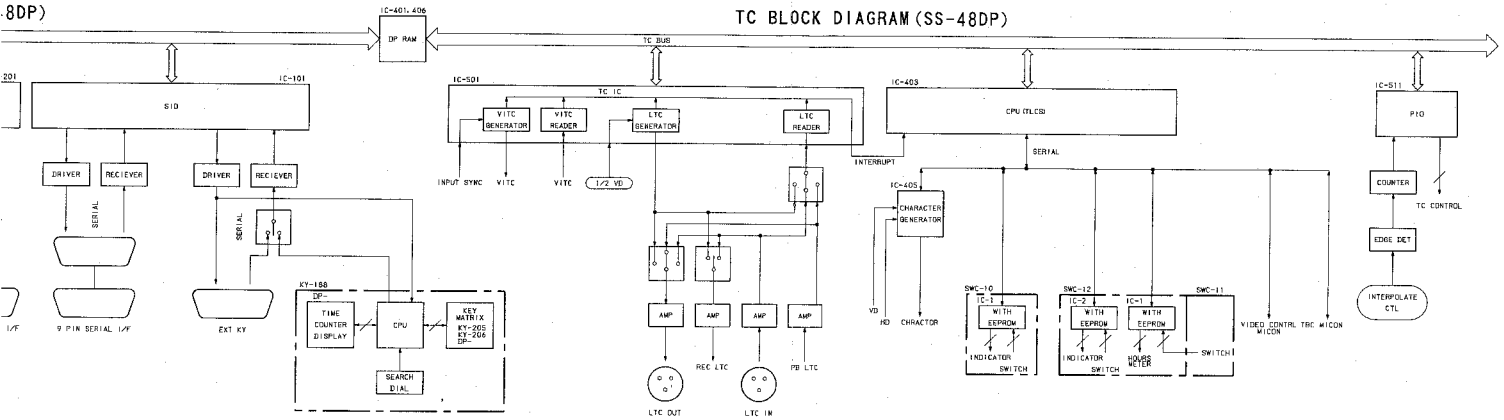

OVERALL BLOCK DIAGRAM **(3/5)**

SYSTEM CONTROL BLOCK

BVW-D75PS : #10001-

12-3

OVERALL BLOCK DIAGRAM (4/5)
DYNAMIC TRACKING BLOCK

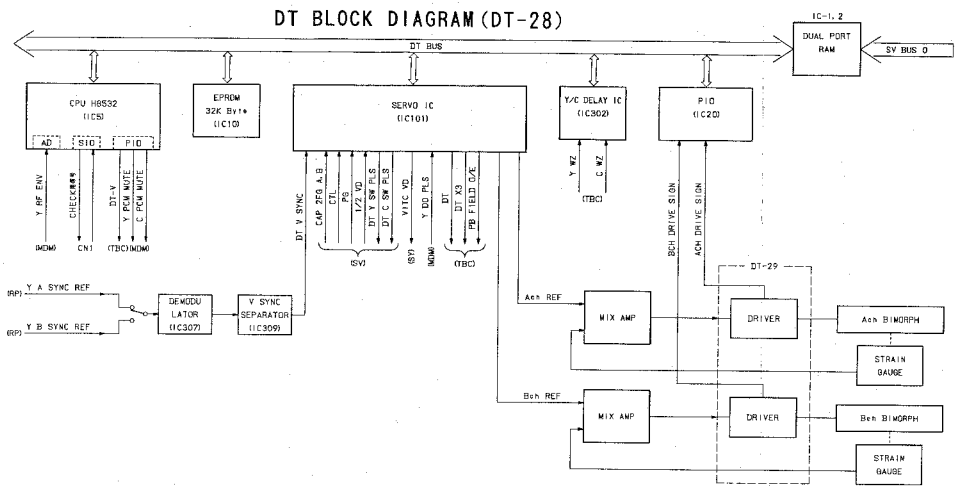

OVERALL BLOCK DIAGRAM **(4/5)**
DYNAMIC TRACKING BLOCK

BVW-D75PS : # 10001-

12-4

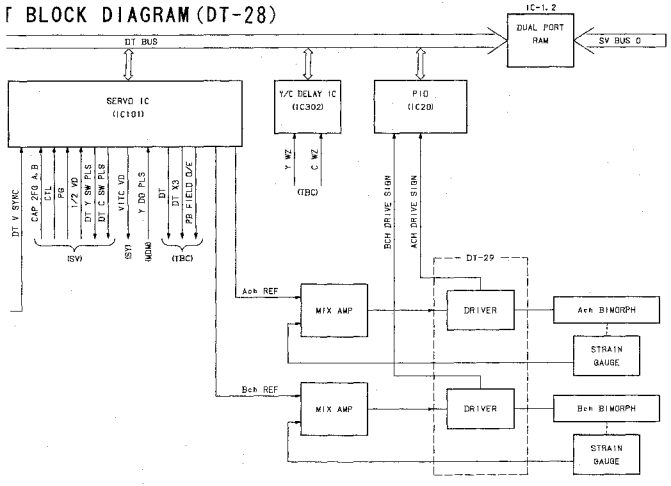

OVERALL BLOCK DIAGRAM **(4/5)**

DYNAMIC TRACKING BLOCK

BVW-D75PS : #10001-

12-4

OVERALL BLOCK DIAGRAM (5/5)
SERVO BLOCK

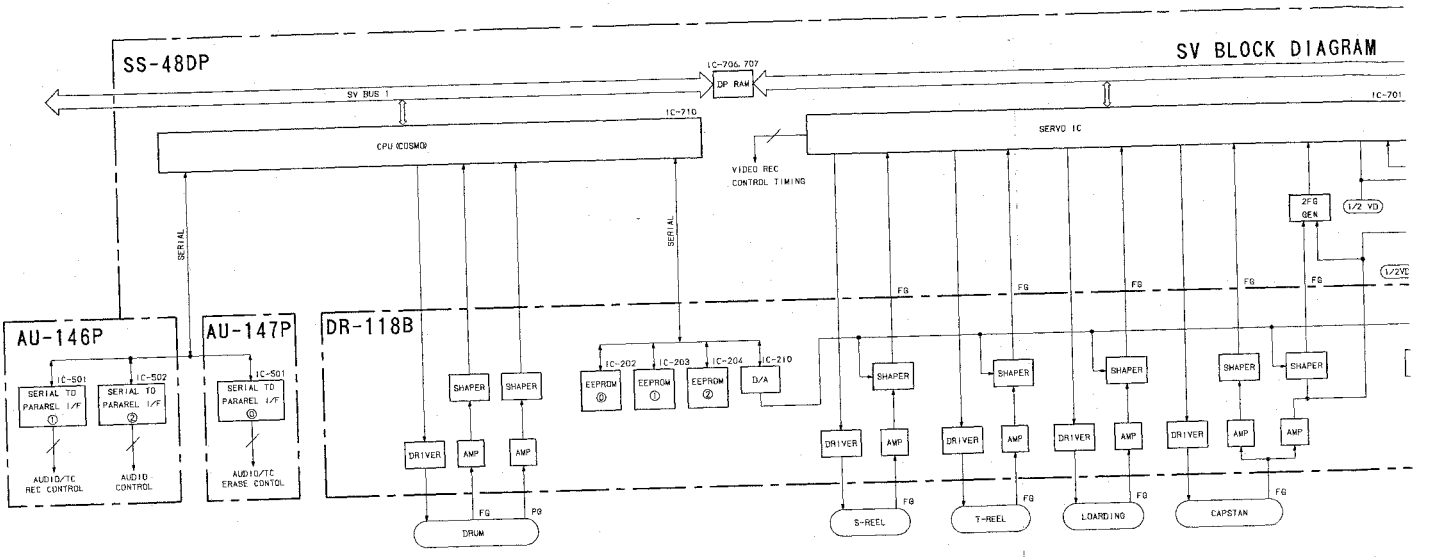

12-5

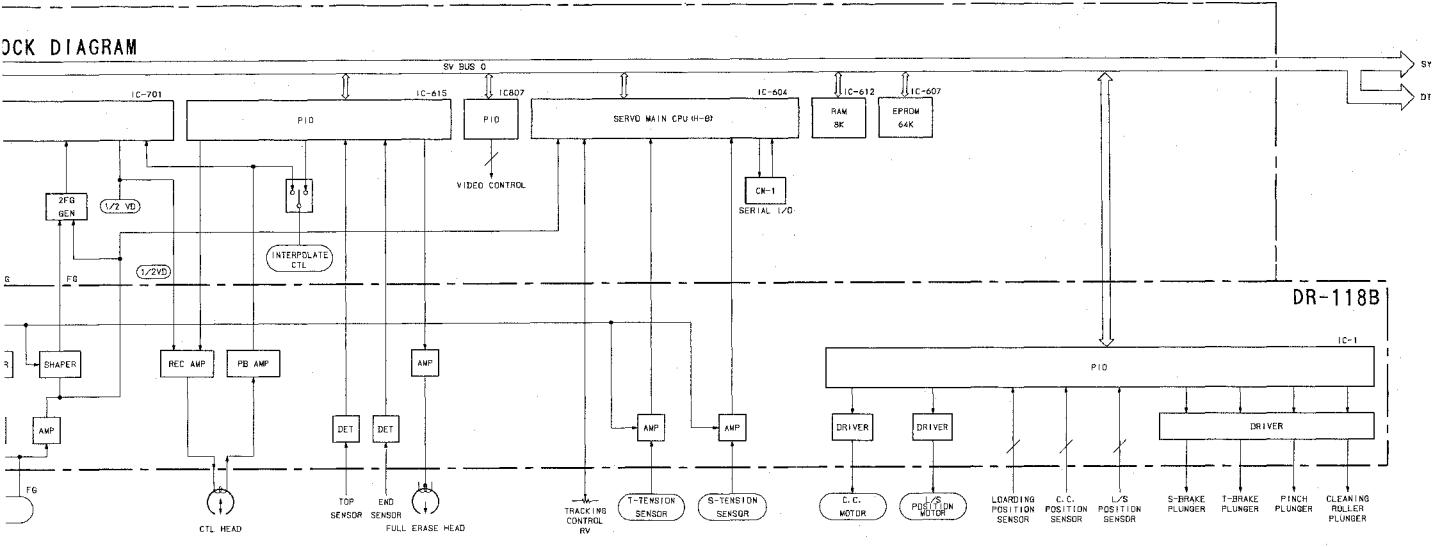

OVERALL BLOCK DIAGRAM **(5/5)**

SERVO BLOCK

BVW-D75PS : #10001-

12-5

MDM-5P BOARD (1/5)
Modulator, Demodulator

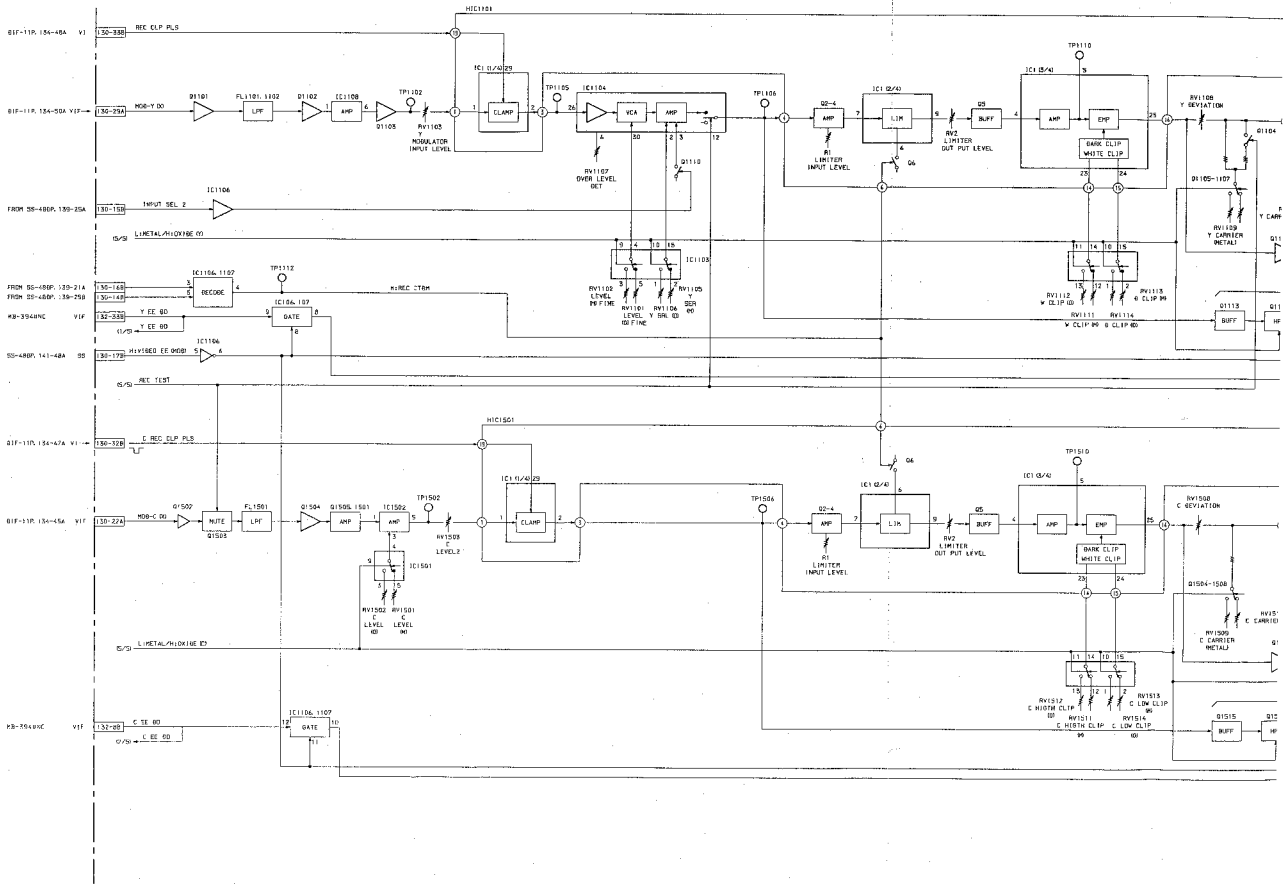

12-6

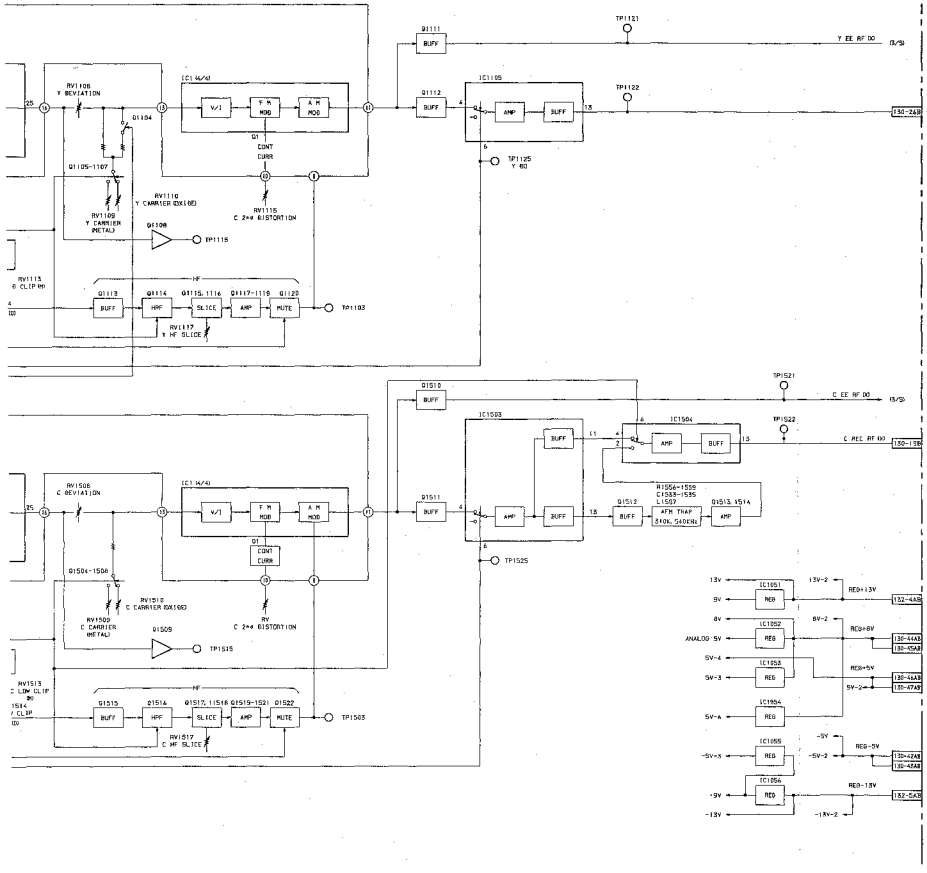

MDM-5P BOARD BLOCK DIAGRAM **(1/5)**

BVW-D75PS : #10001-

12-6

MDM-5P BOARD (2/5)
Modulator, Demodulator

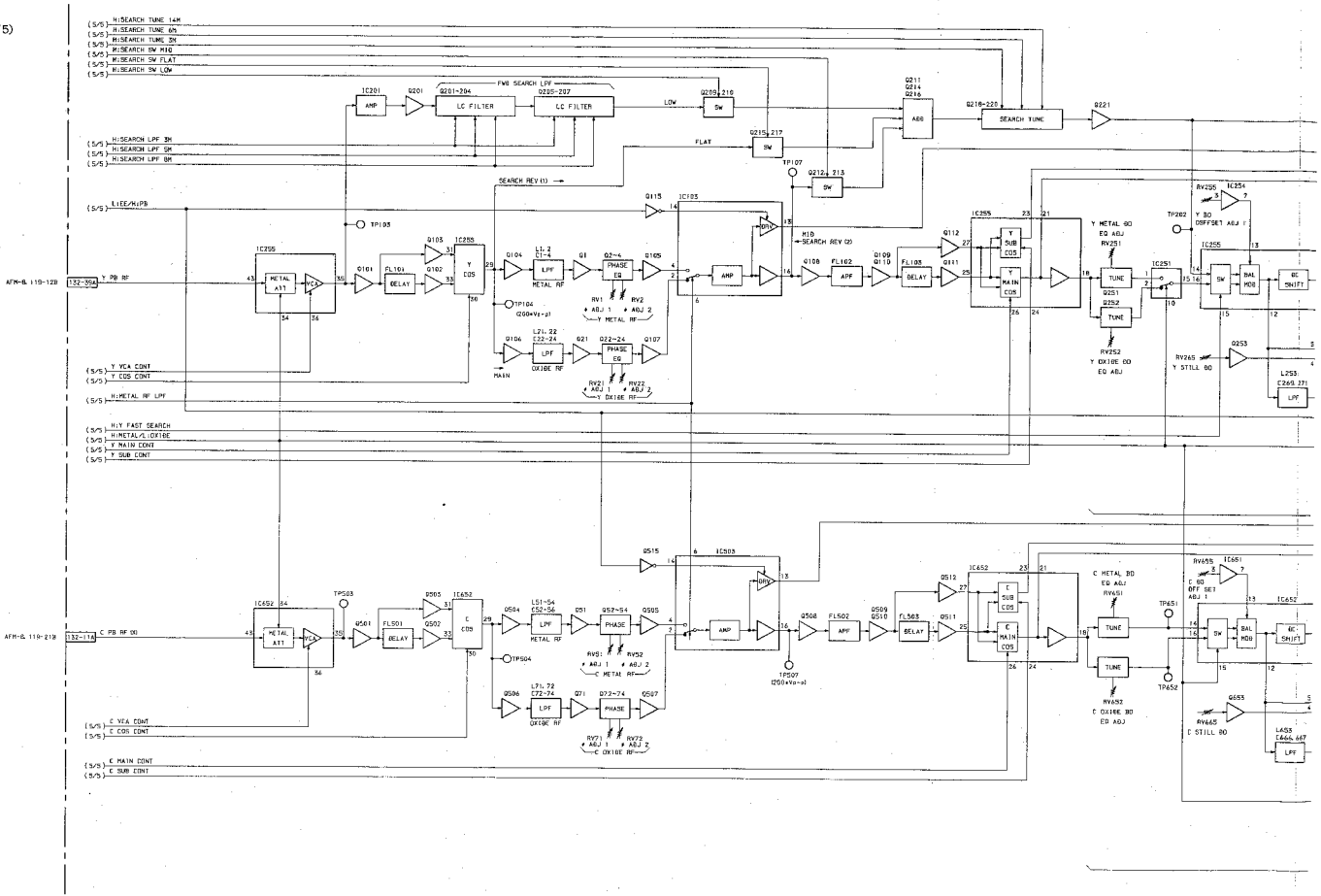

12-7

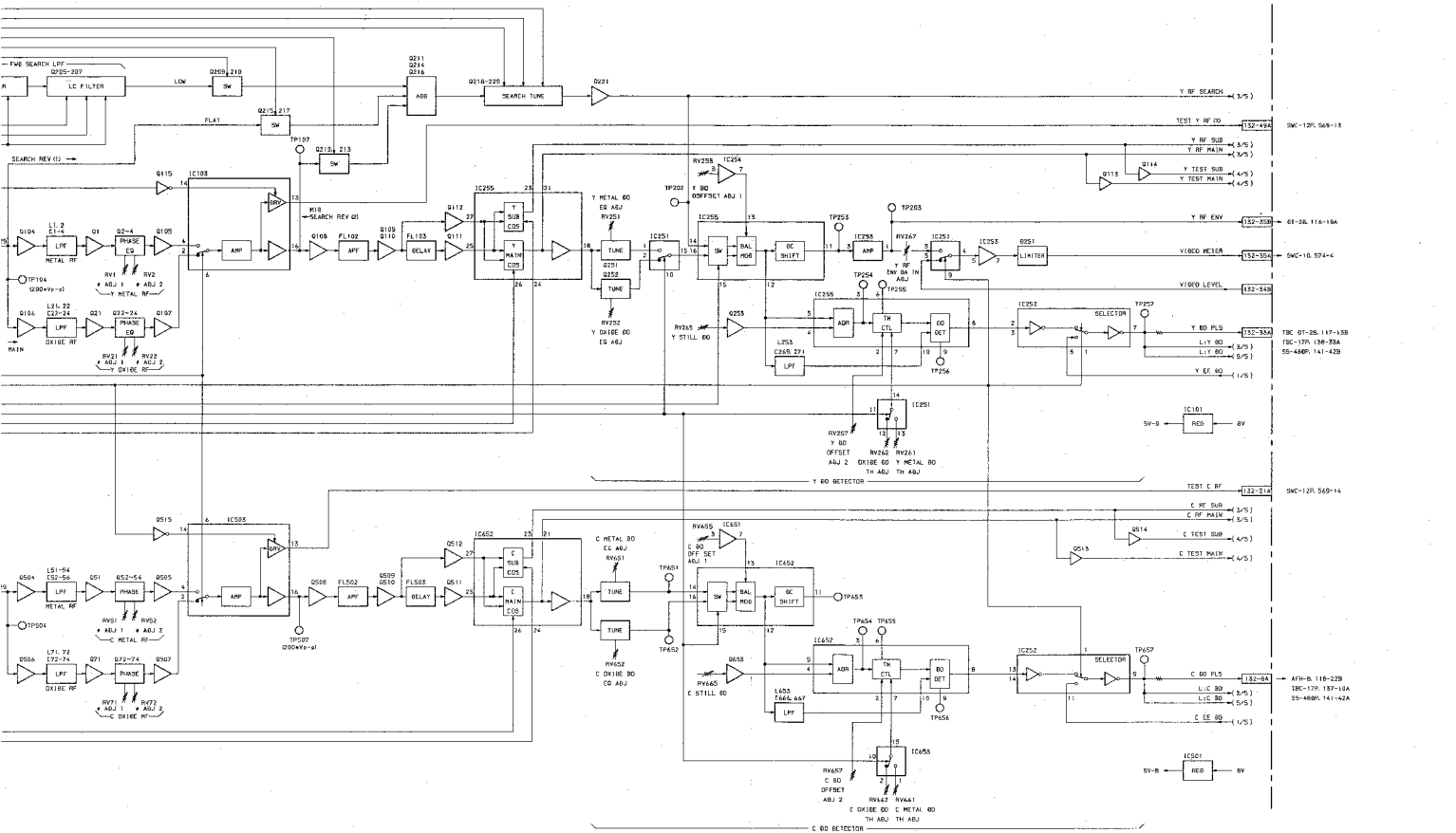

MDM-5P BOARD BLOCK DIAGRAM **(2/5)**

BVW-D75PS ; # 10001-

12-7

MDM-5P BOARD (3/5)
Modulator, Demodulator

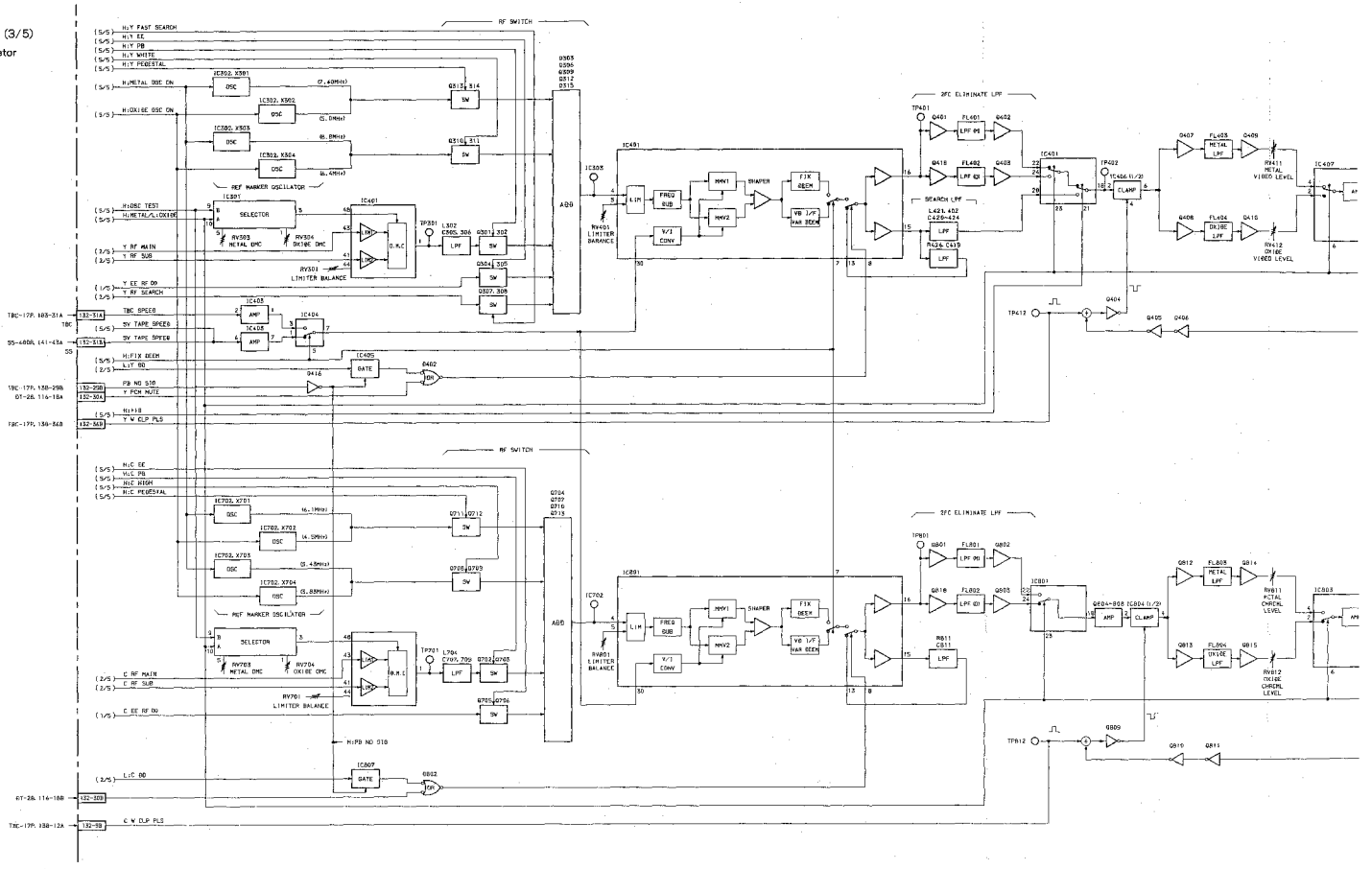

MDM-5P (3/5) BLOCK DIAGRAM

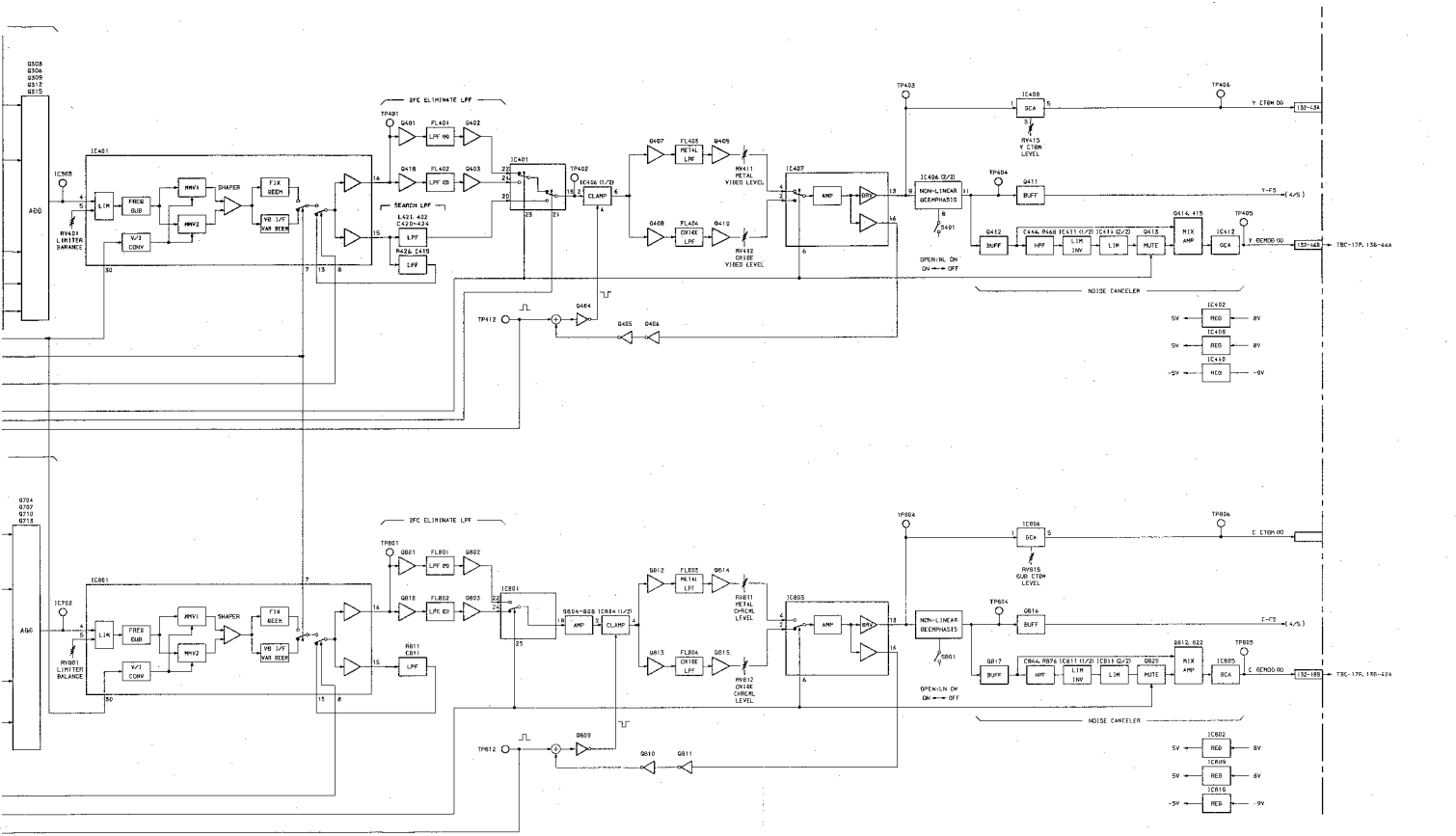

MDM-5P BOARD BLOCK DIAGRAM **(3/5)**

BVW-D75PS : # 10001-

12-8

MDM-5P BOARD (4/5)
Modulator, Demodulator

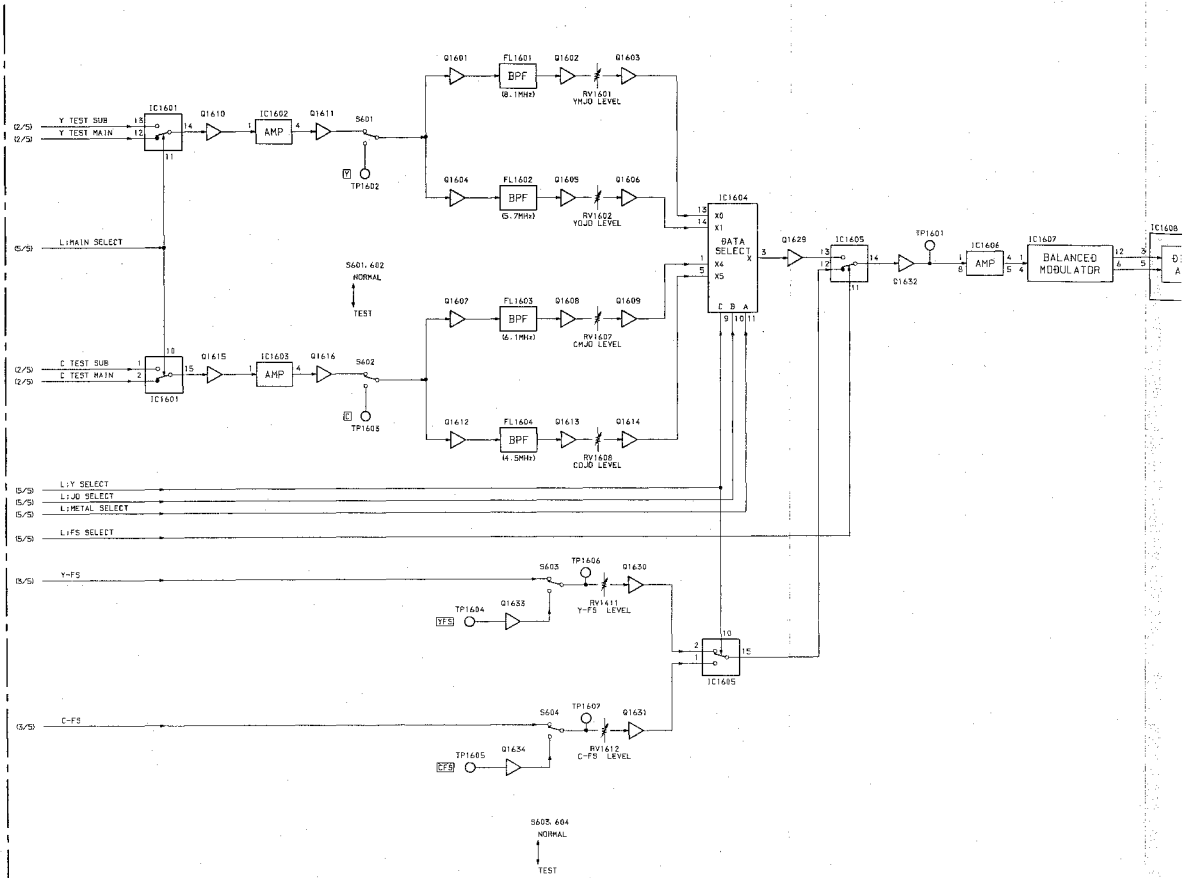

12-9

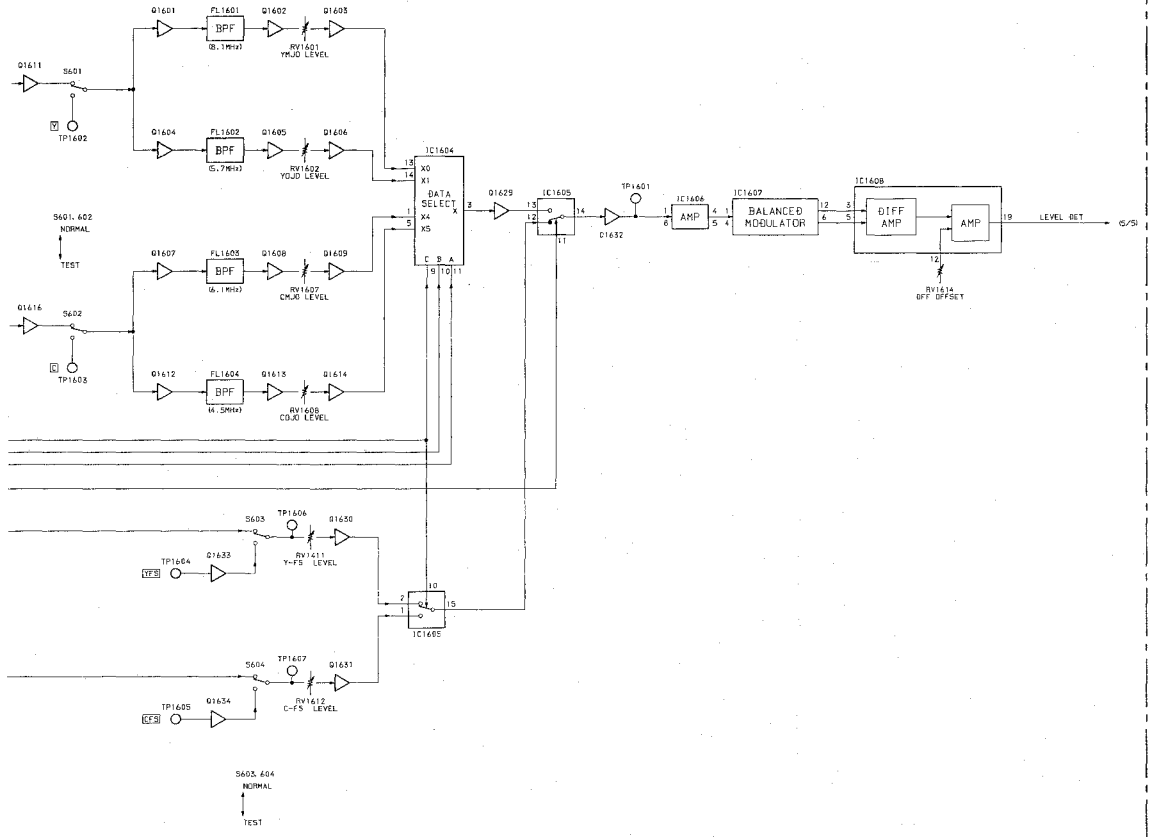

MDM-5P BOARD BLOCK DIAGRAM **(4/5)**

BVW-D75PS : # 10001-

MDM-5P BOARD (5/5)
Modulator, Demodulator

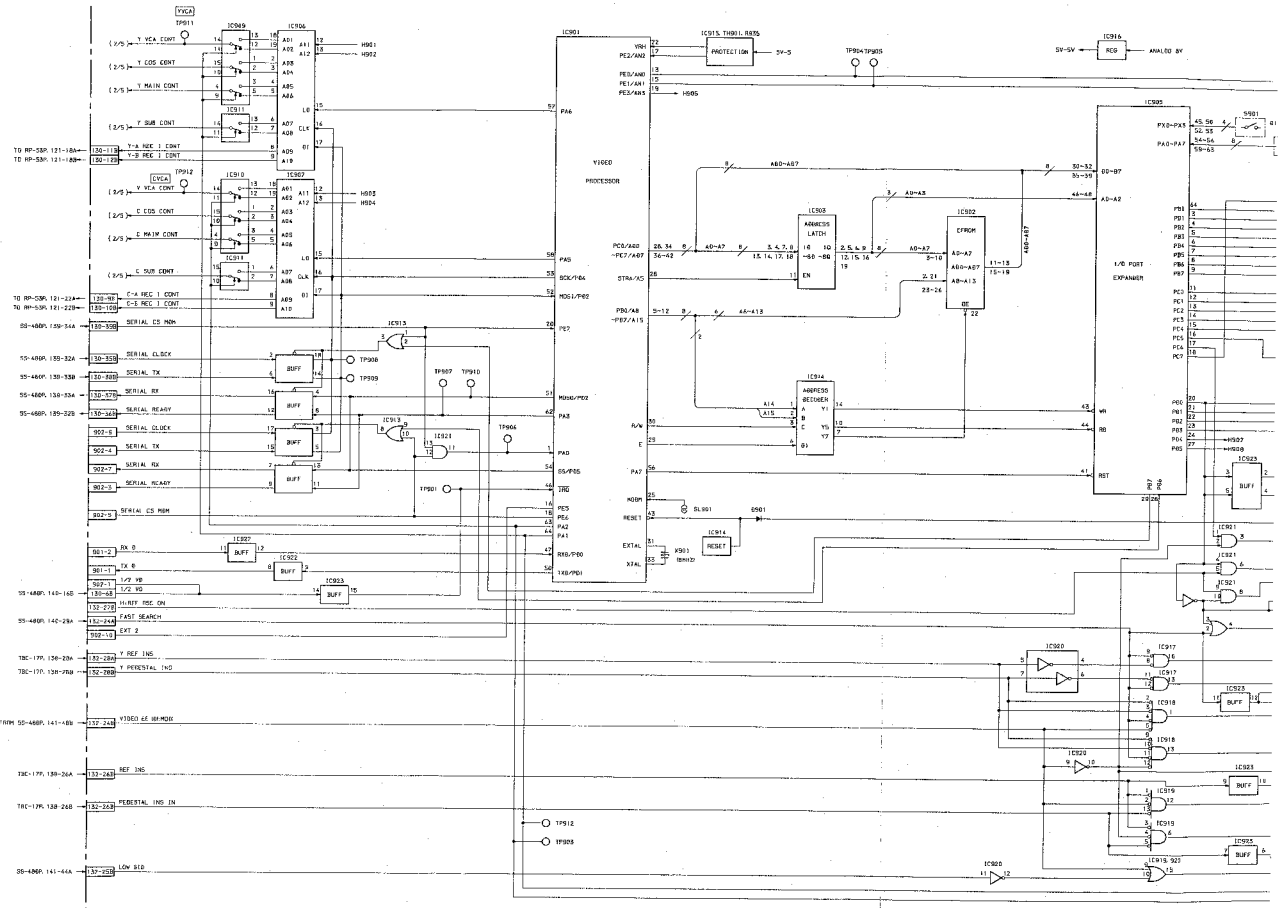

12-10

MDM-5P (5/5) BLOCK DIAGRAM

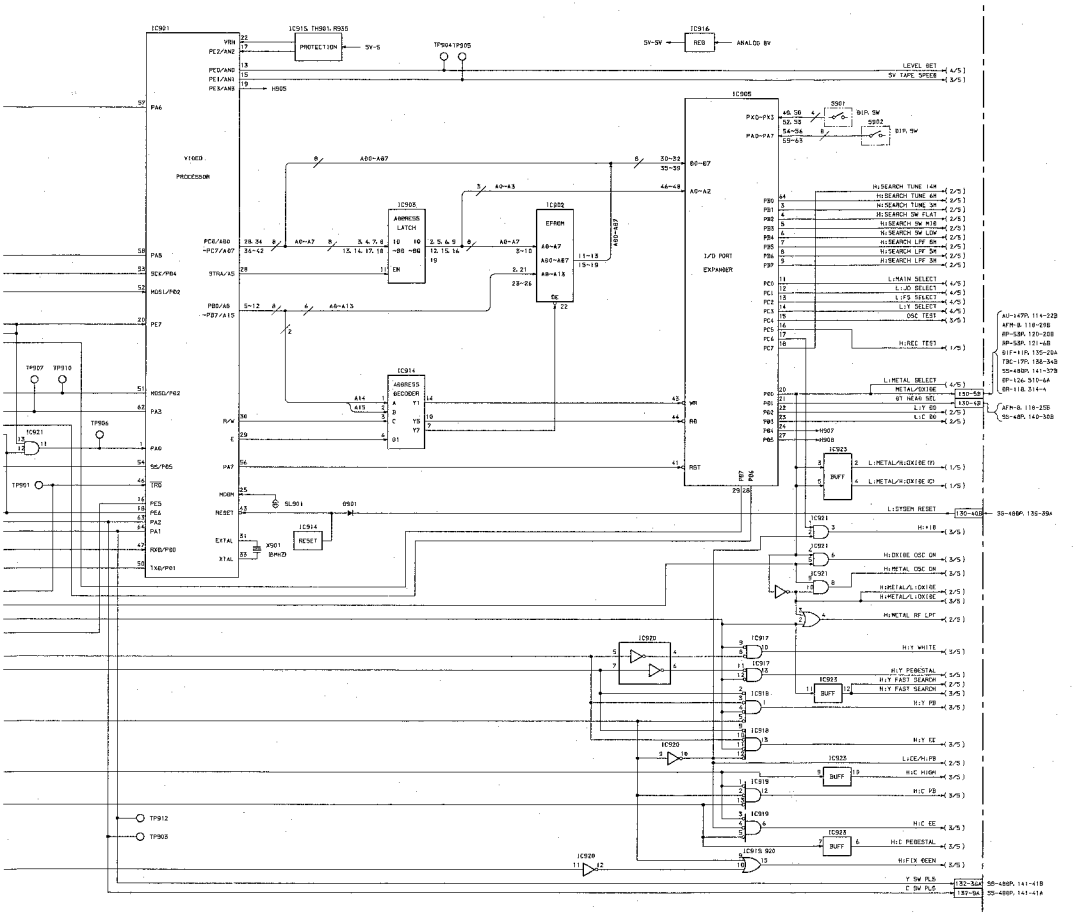

MDM-5P BOARD BLOCK DIAGRAM **(5/5)**

8VW-D75PS : #10001-

12-10

RP-53P BOARD
Video/Audio REC, PB Amplifier

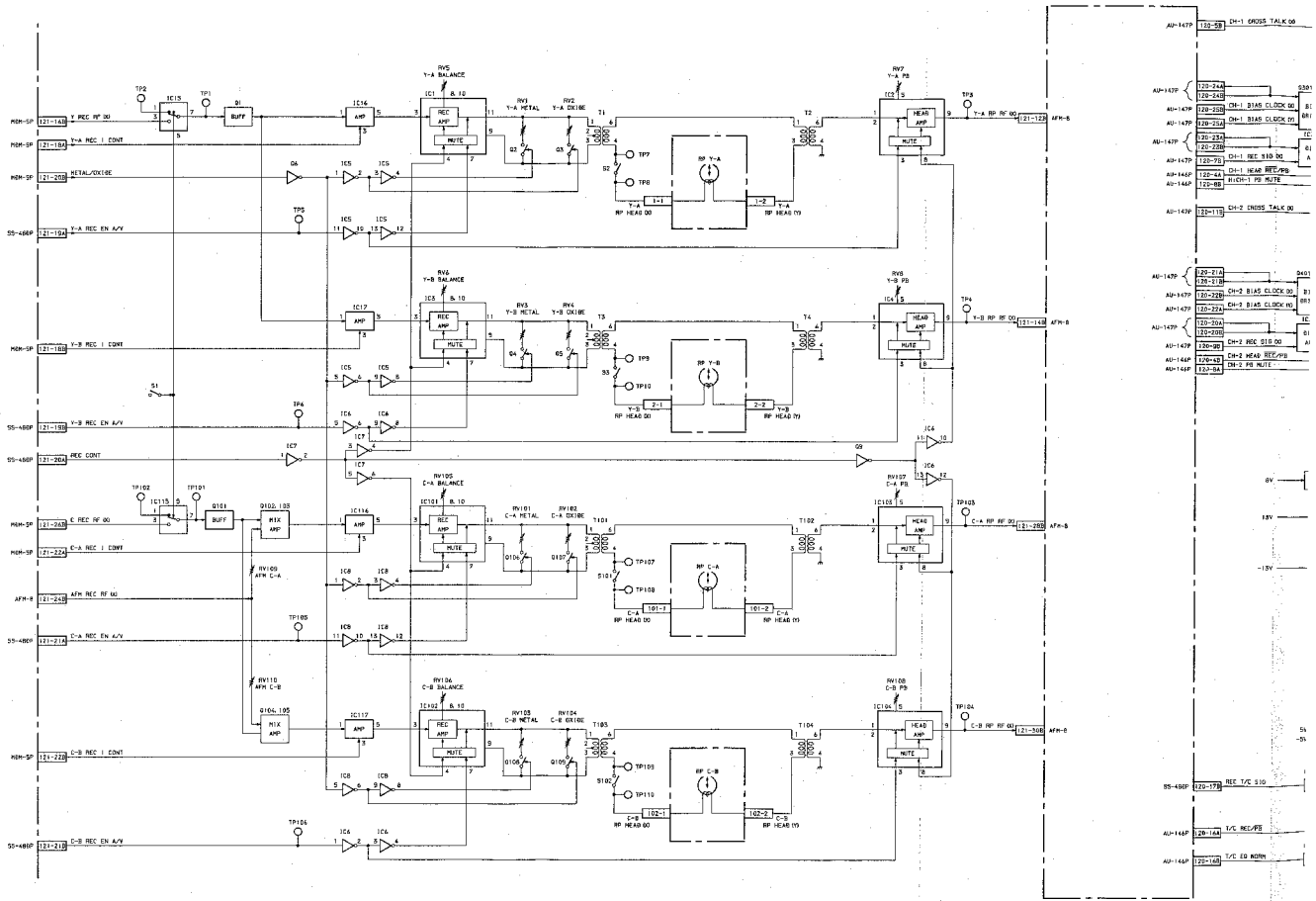

12-11

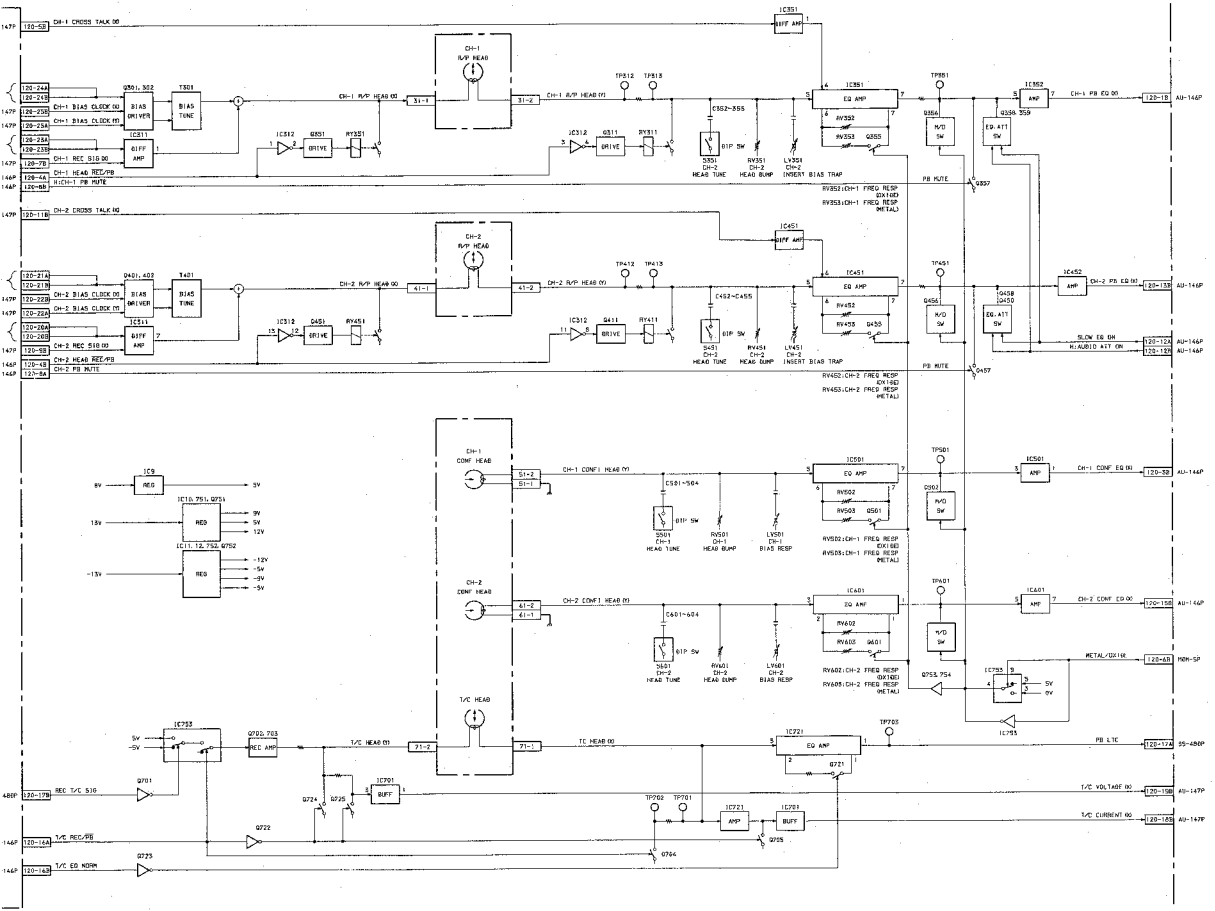

RP-53P BOARD BLOCK DIAGRAM

BVW-D75PS : #10001-

12-11

TBC-17P BOARD (1/2)
A/D, D/A Memory, W/R Clock Generation

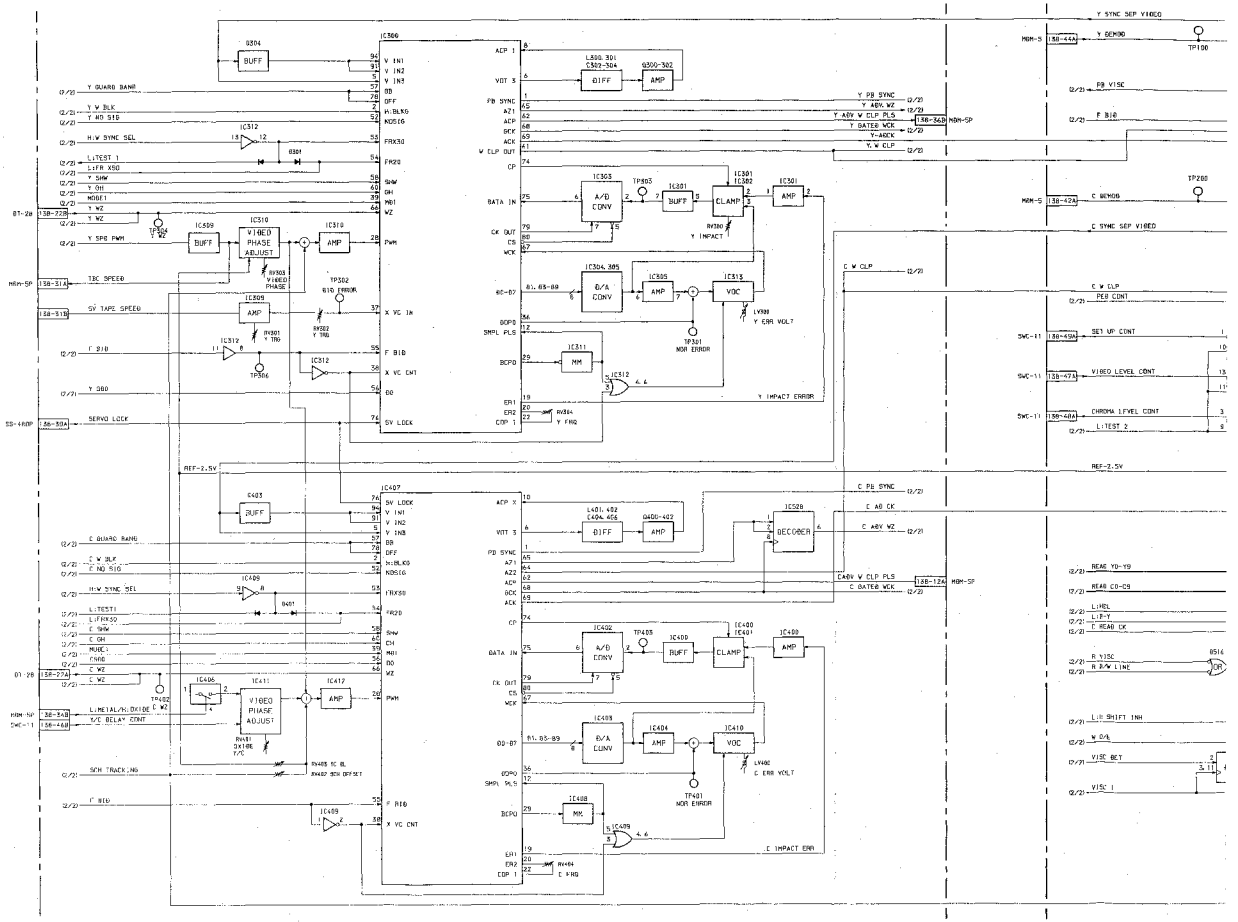

12-12

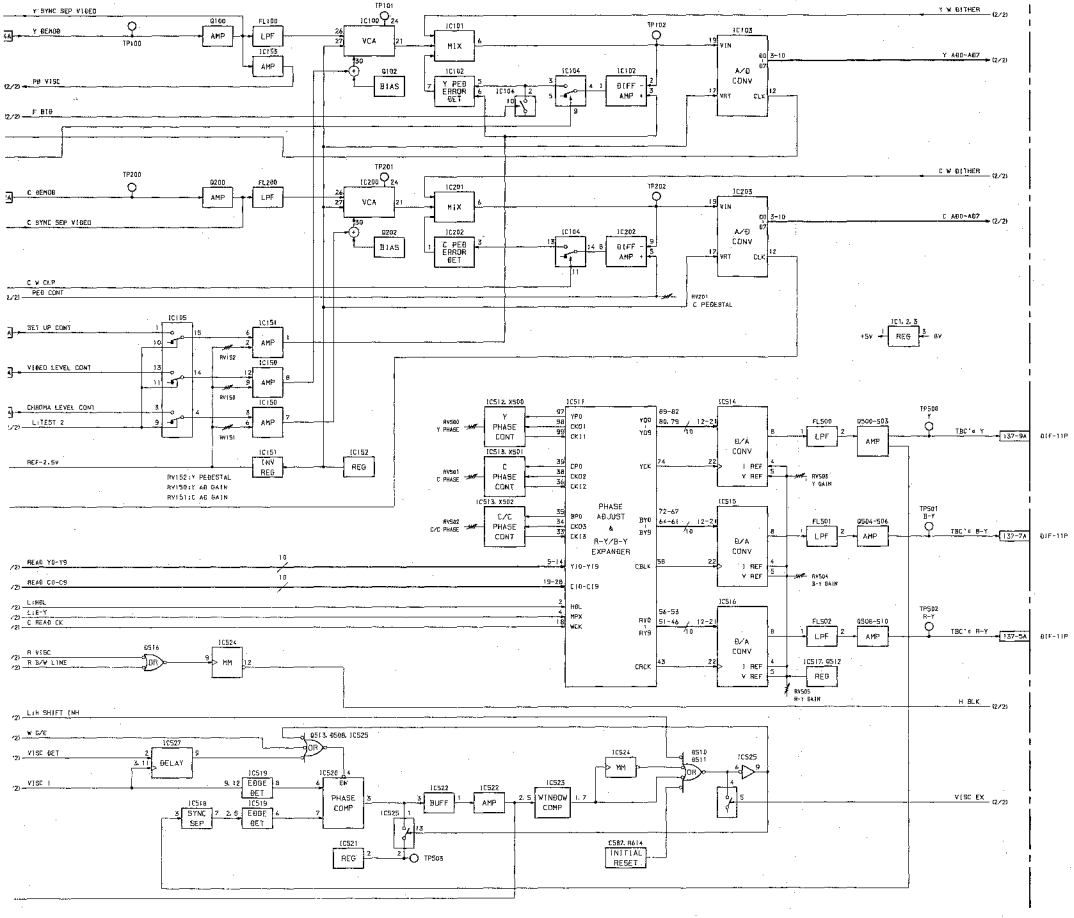

TBC-17P BOARD BLOCK DIAGRAM **(1/2)**

BVW-D75PS : #10001-

12-12

TBC-17P BOARD (2/2)
A/D, D/A Memory, W/R Clock Generation

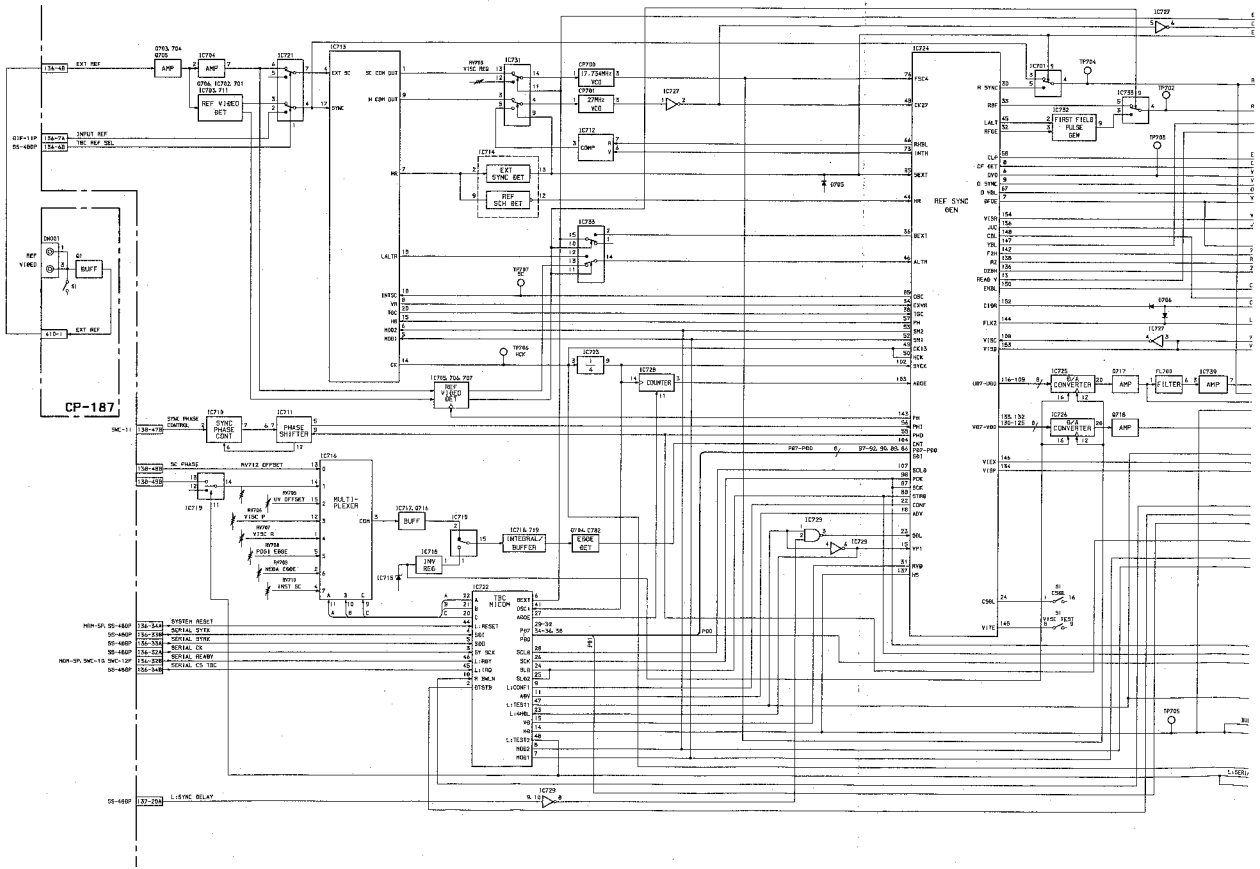

12-13

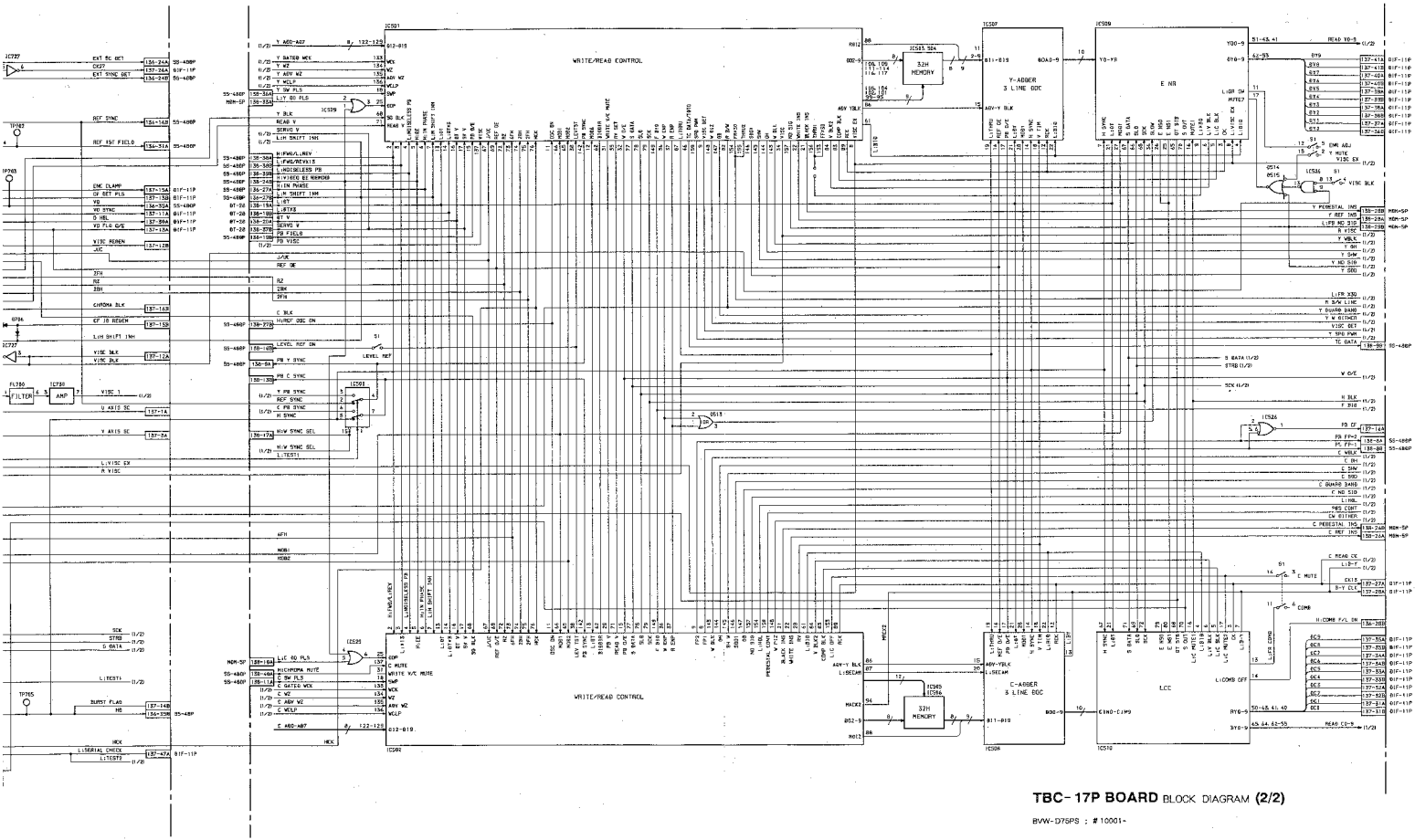

TBC-17P BOARD BLOCK DIAGRAM **(2/2)**

BVW-D75PS : #10001-

12-13

DIF-11P BOARD (1/5) (2/5)

P/P, P/S Converter, 4:2:2 DEC/ENC

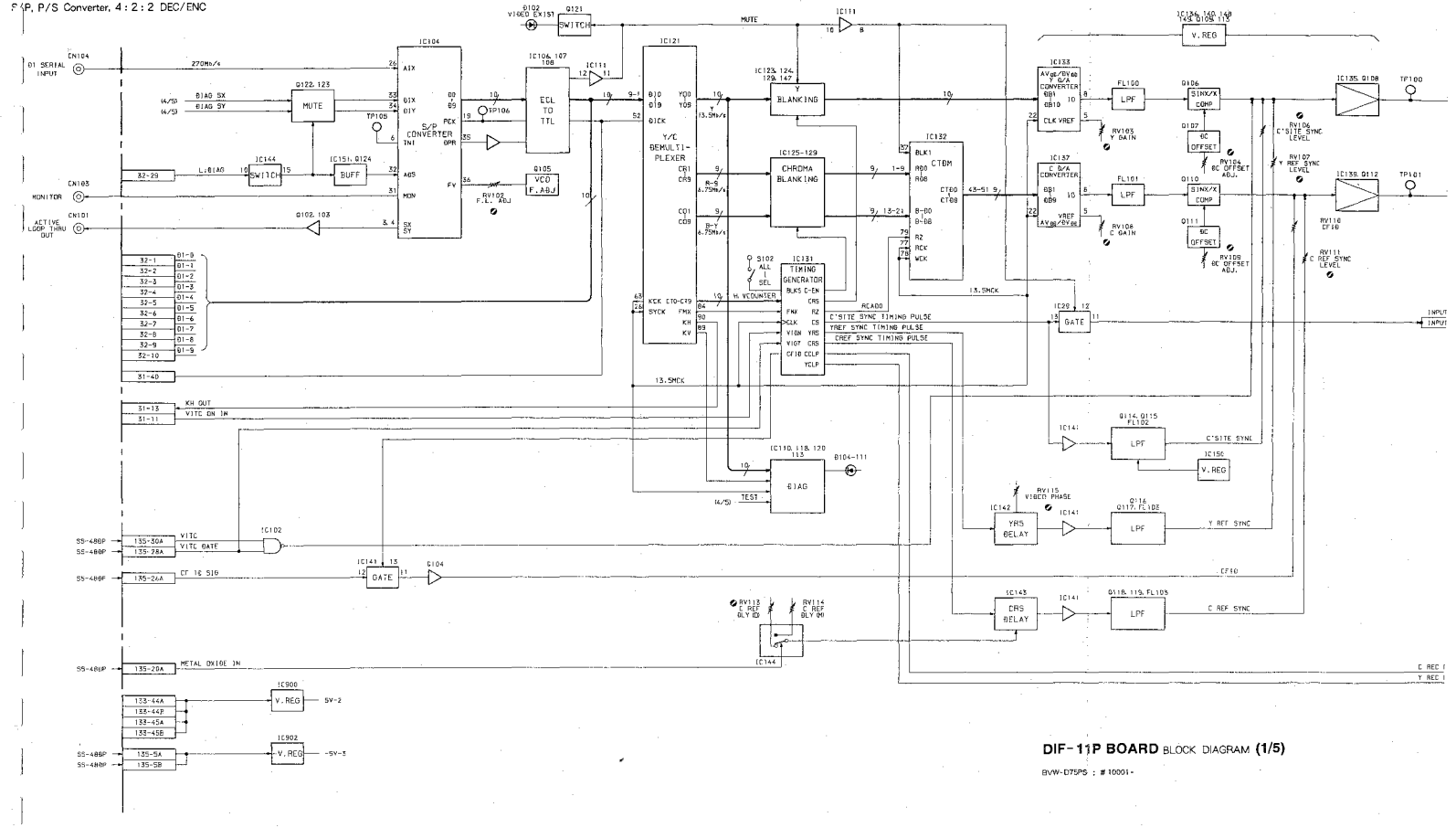

DIF-11P BOARD BLOCK DIAGRAM **(1/5)**

BVW-D75PS : #10001-

12-14

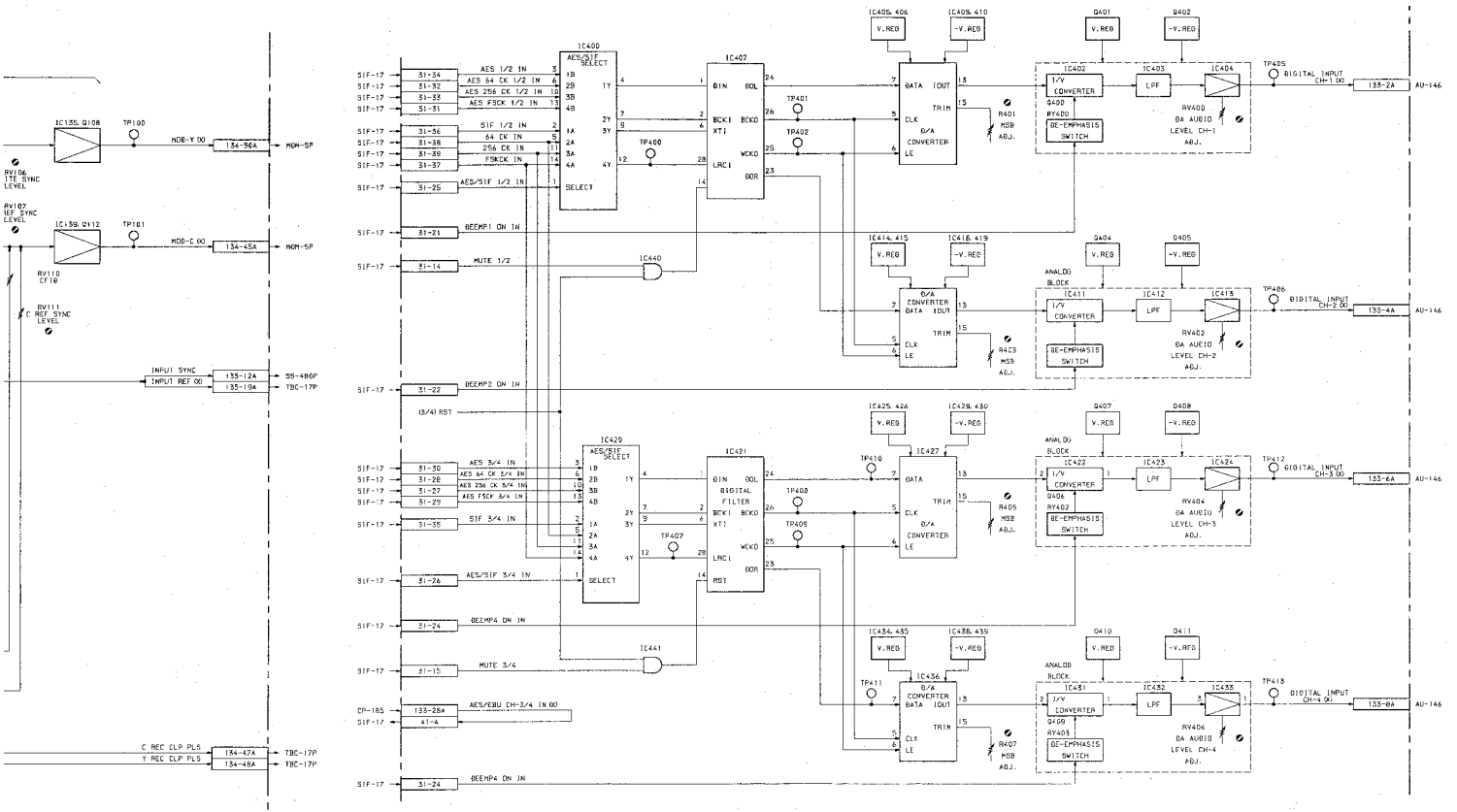

DIF-11P BOARD BLOCK DIAGRAM **(2/5)**

BVW-D75PS : # 10001-

12-14

DIF-11P BOARD (3/5) (4/5) (5/5)
S/P, P/S Converter, 4 : 2 : 2 DEC/ENC

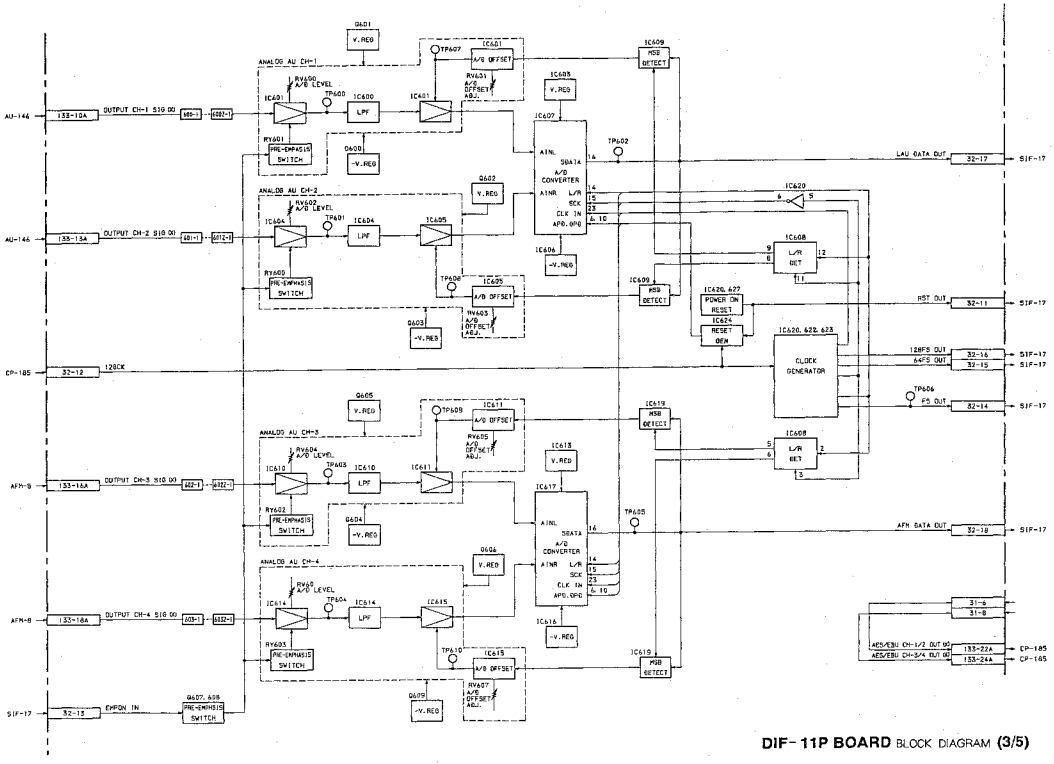

DIF-11P BOARD BLOCK DIAGRAM **(3/5)**

BVW-D75PS : #10001-

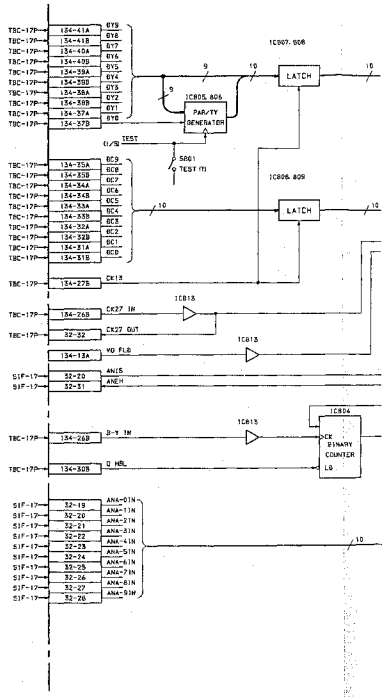

12-15

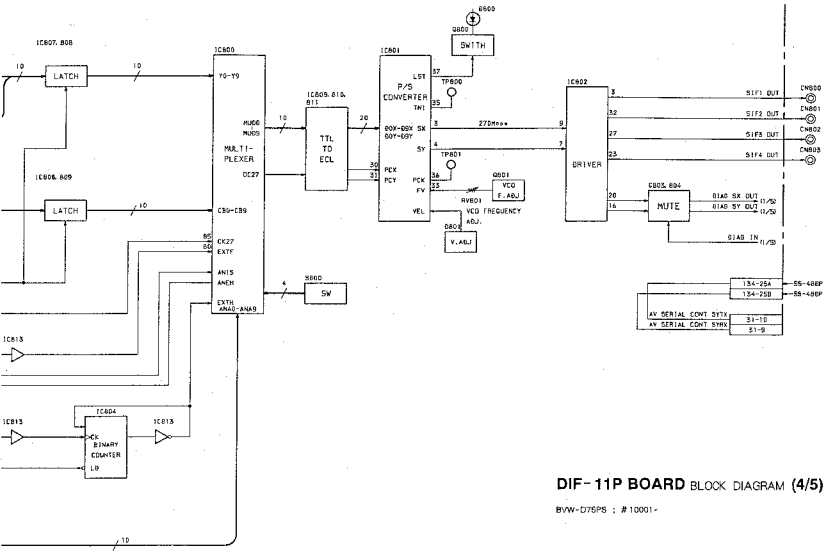

DIF-11P BOARD BLOCK DIAGRAM **(4/5)**

BVW-D75PS ; #10001-

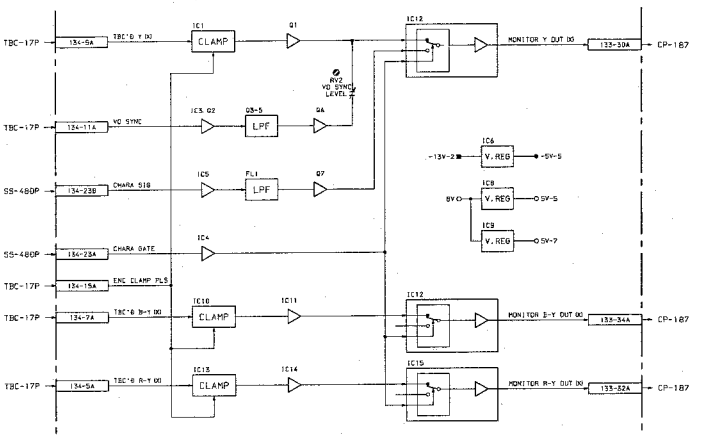

DIF-11P BOARD BLOCK DIAGRAM **(5/5)**

BVW-D75PS ; #10001-

ArM-8 BOARD
AFM Audio MOD/DEMOD

BLOCK DIAGRAM **AFM-8**

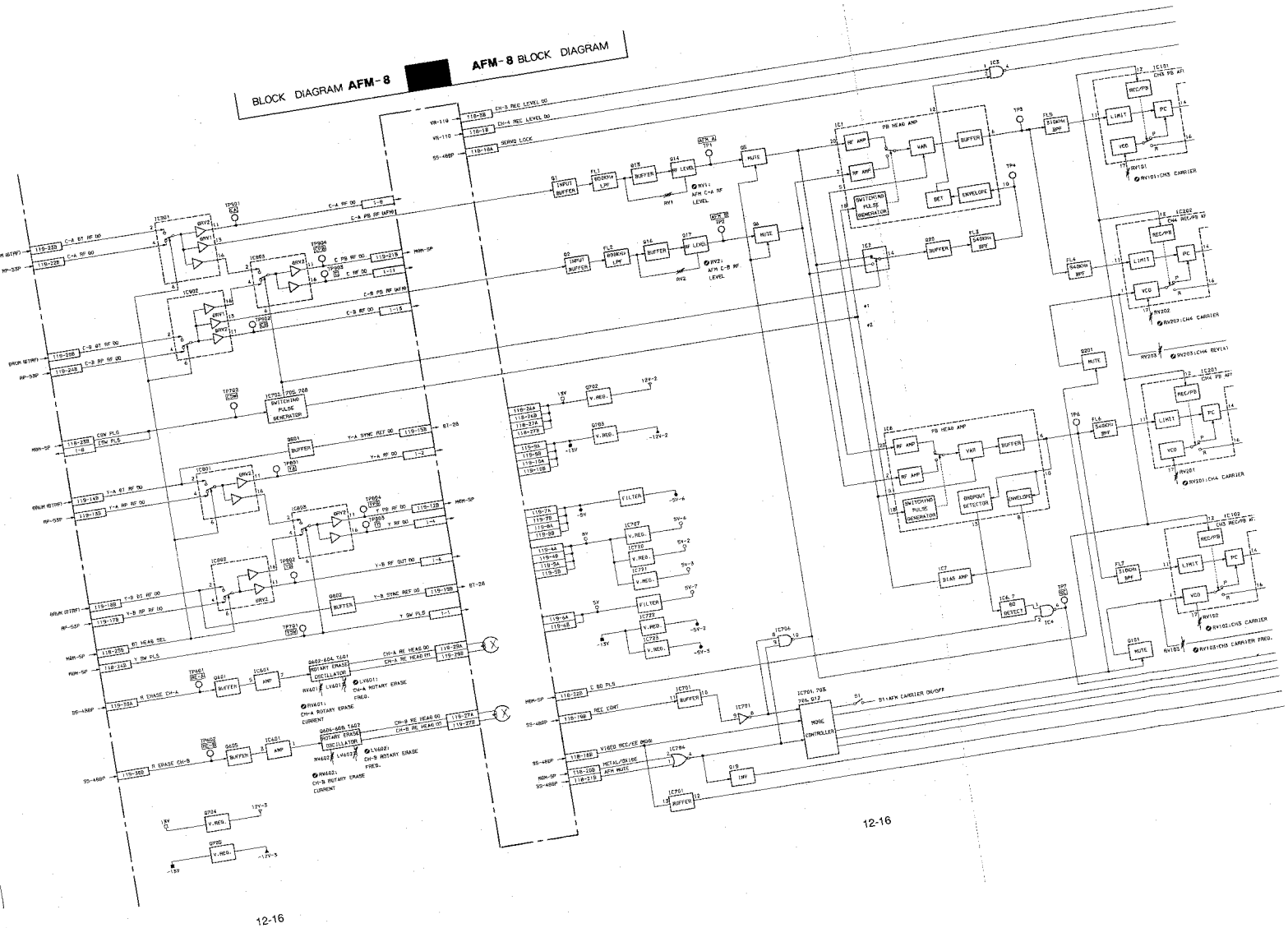

12-16

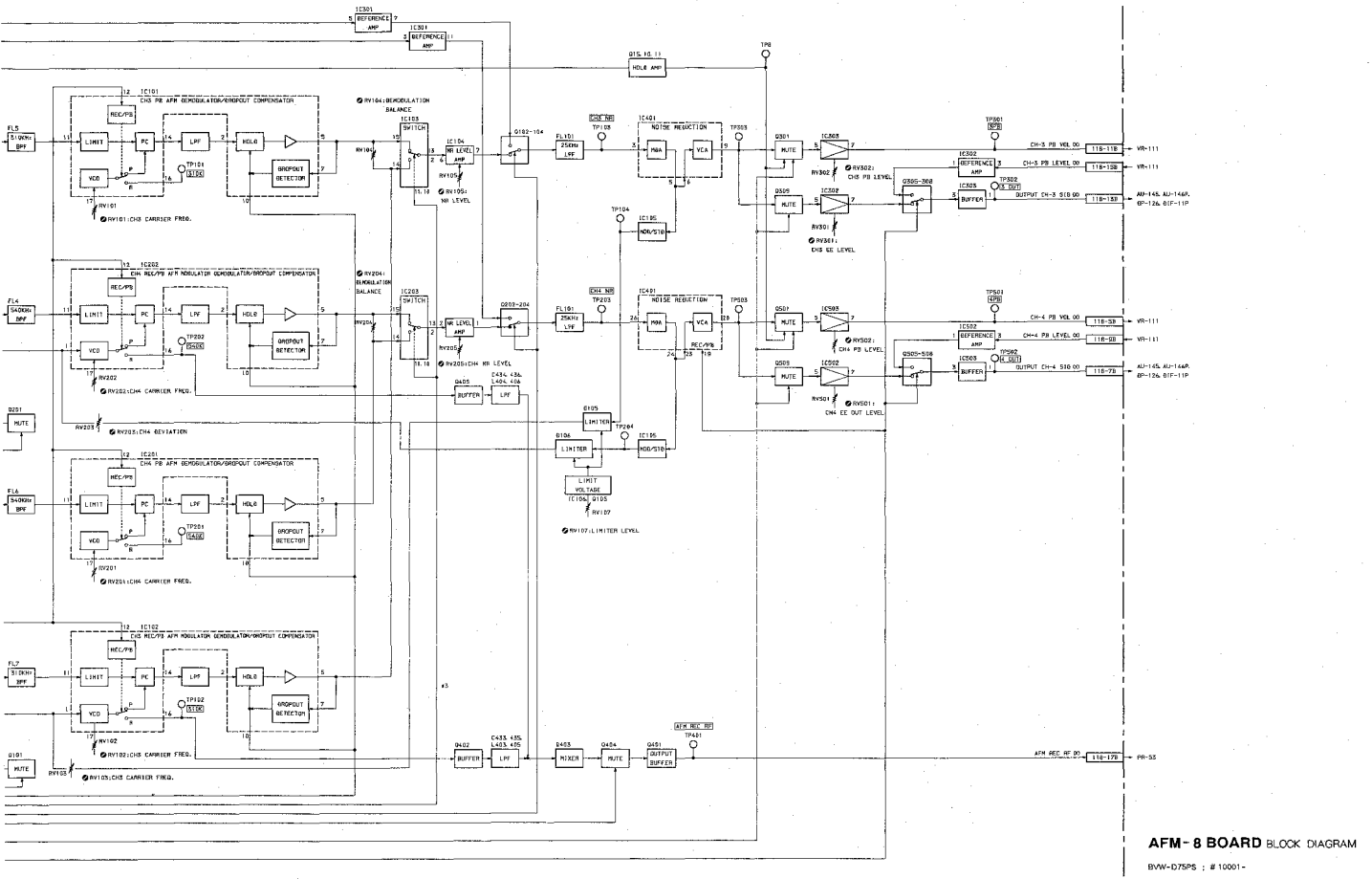

AFM-8 BOARD BLOCK DIAGRAM

BVW-D75PS ; # 10001-

12-16

AUDIO BLOCK DIAGRAM

AUDIO (1/2)

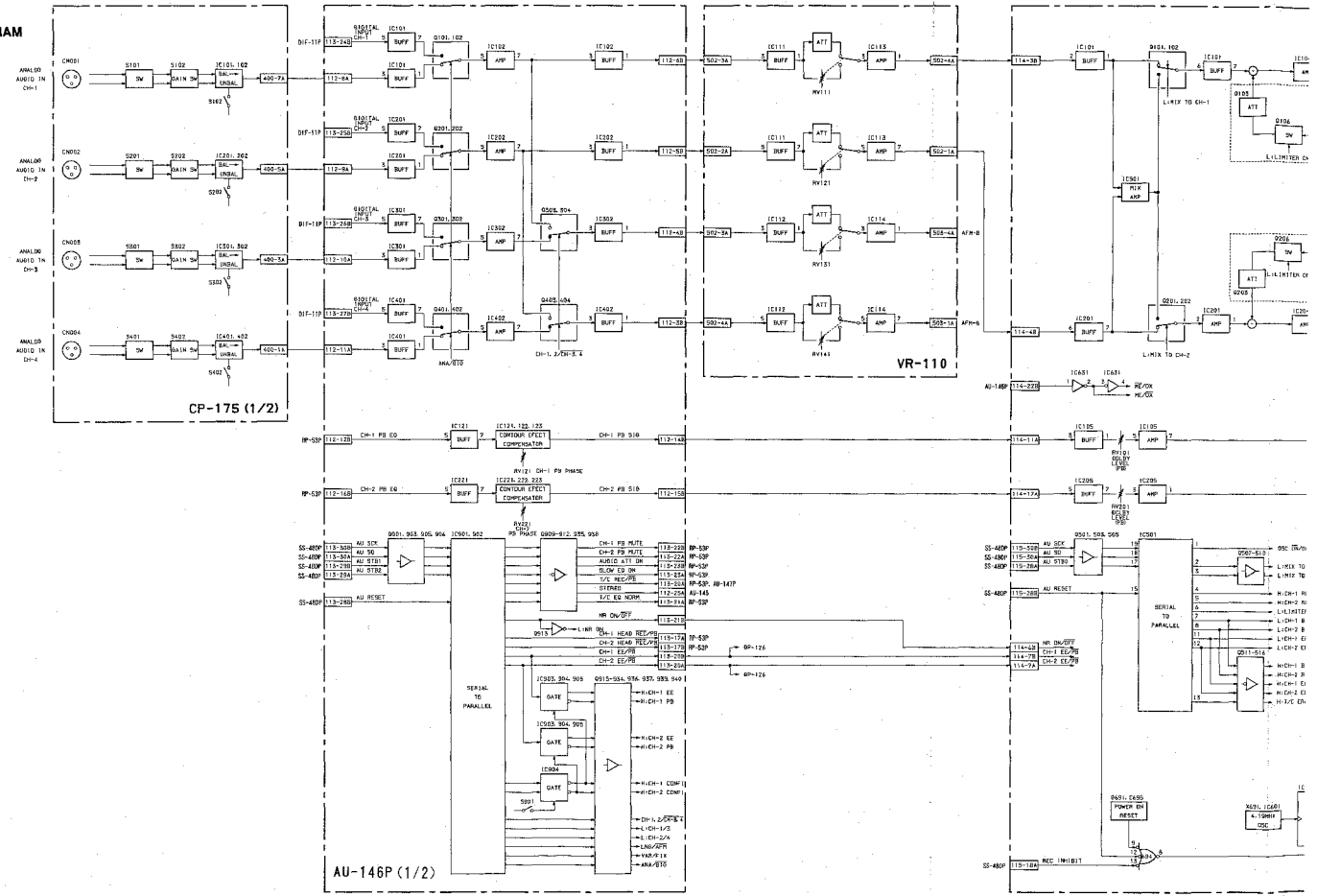

12-17

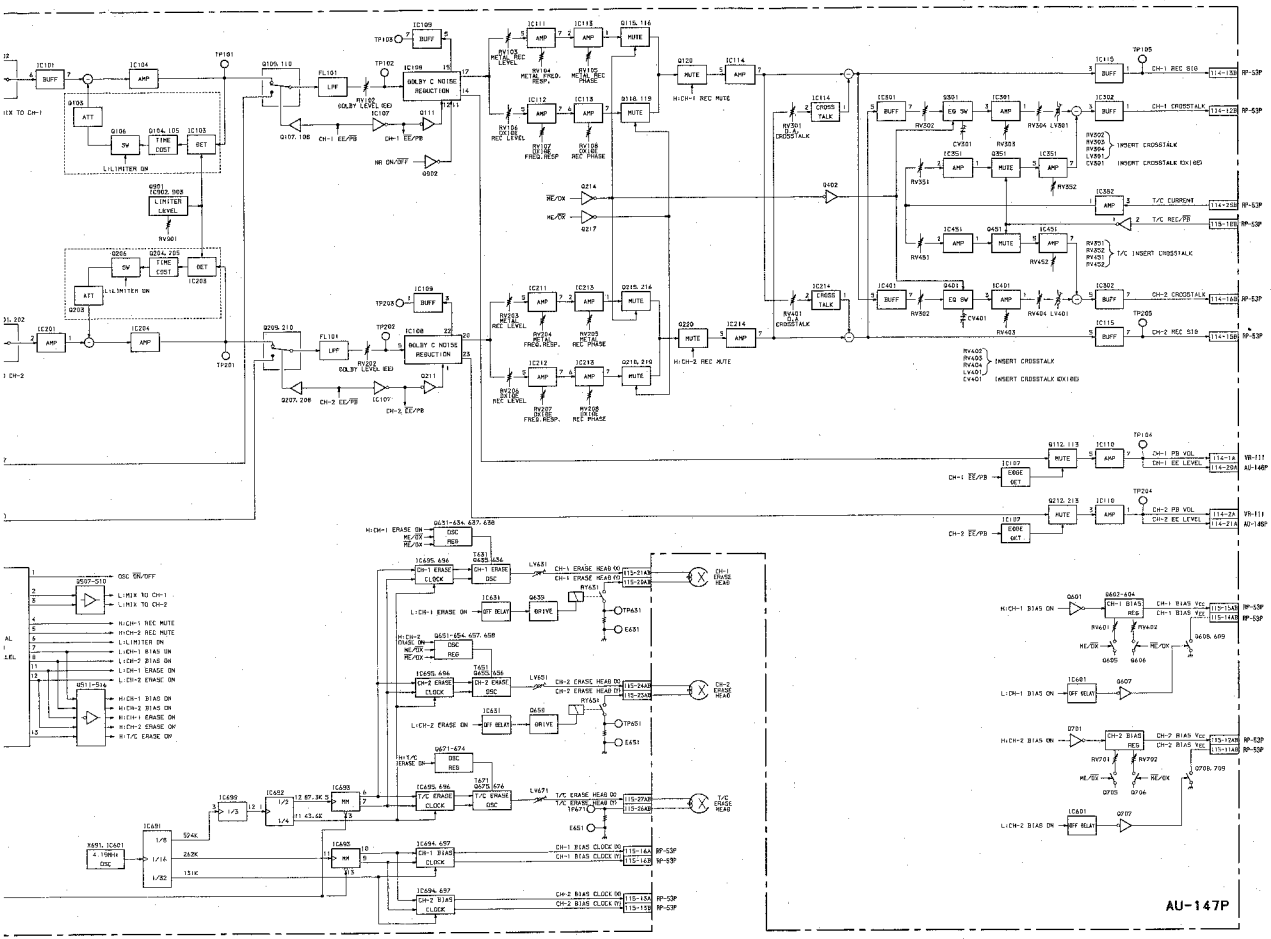

AUDIO BLOCK DIAGRAM **(1/2)**

BVW-D75PS : # 10001-

12-17

AUDIO BLOCK DIAGRAM
AUDIO (2/2)

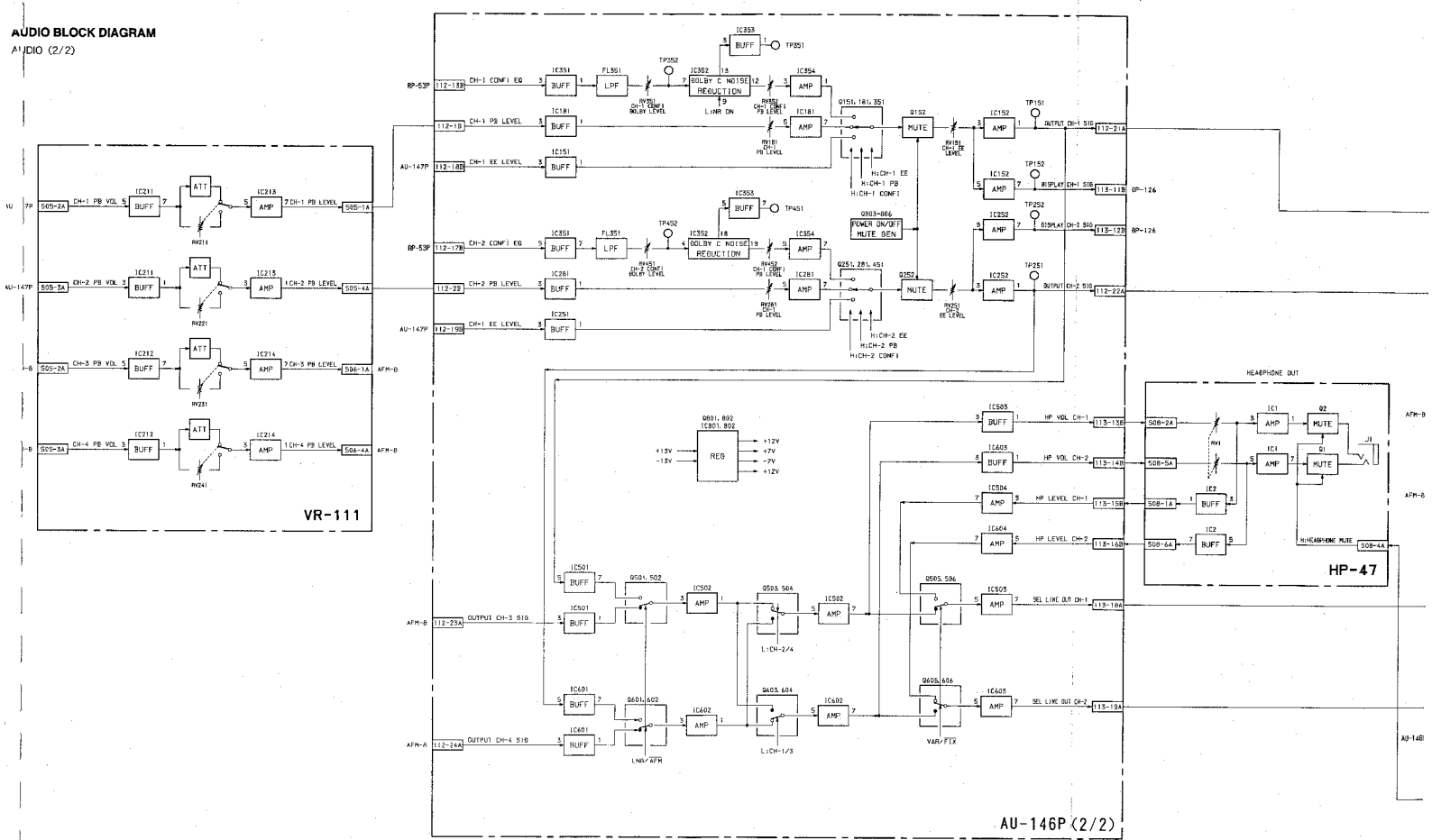

12-18

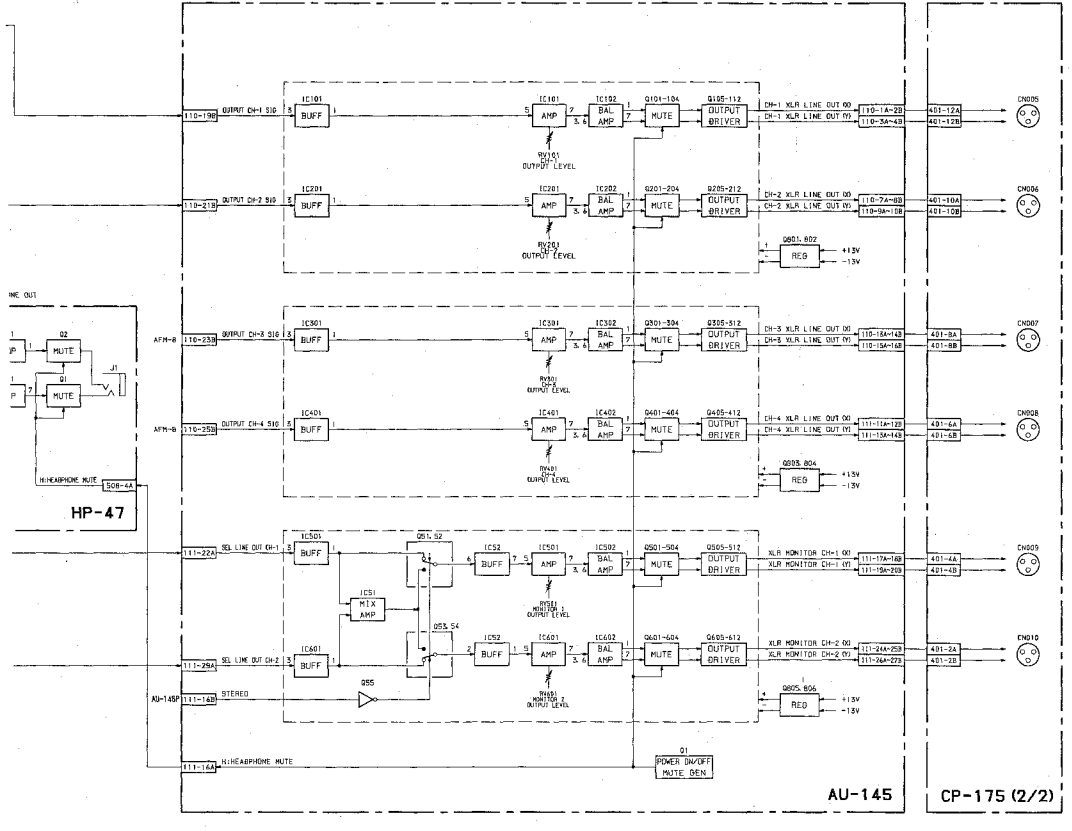

AUDIO BLOCK DIAGRAM **(2/2)**

BVW-D75PS : # 10001-

12-18

SS-48DP BOARD (1/2)

System Control, Drum/Capstan/Reel Servo

Time code Reader/Generator

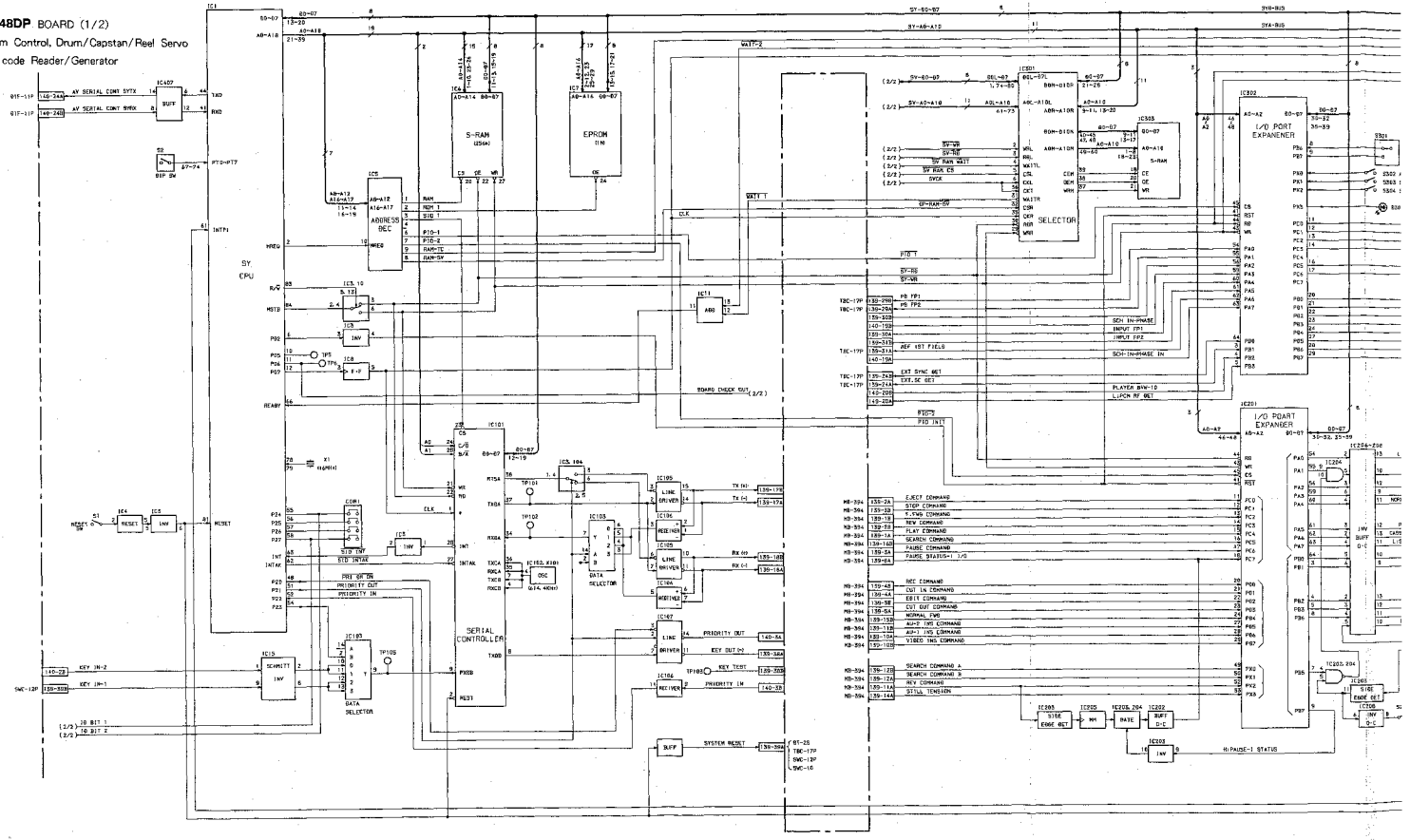

12-19

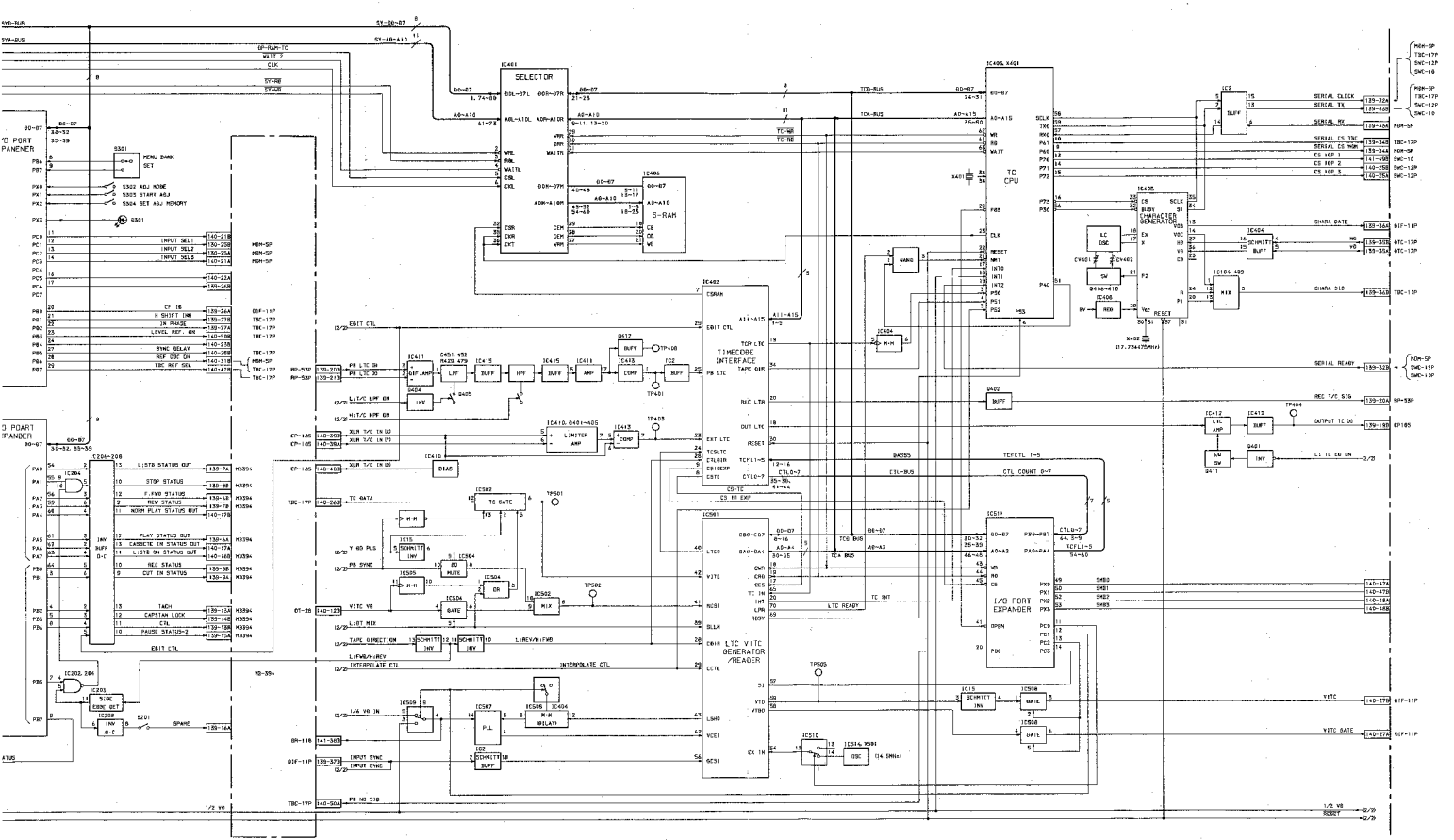

SS-48DP BOARD BLOCK DIAGRAM **(1/2)**

BVW-D75PS ; # 10001-

12-19

S-48DP BOARD (2/2)

System Control, Drum/Capstan/Reel Servo

Time code Reader/Generator

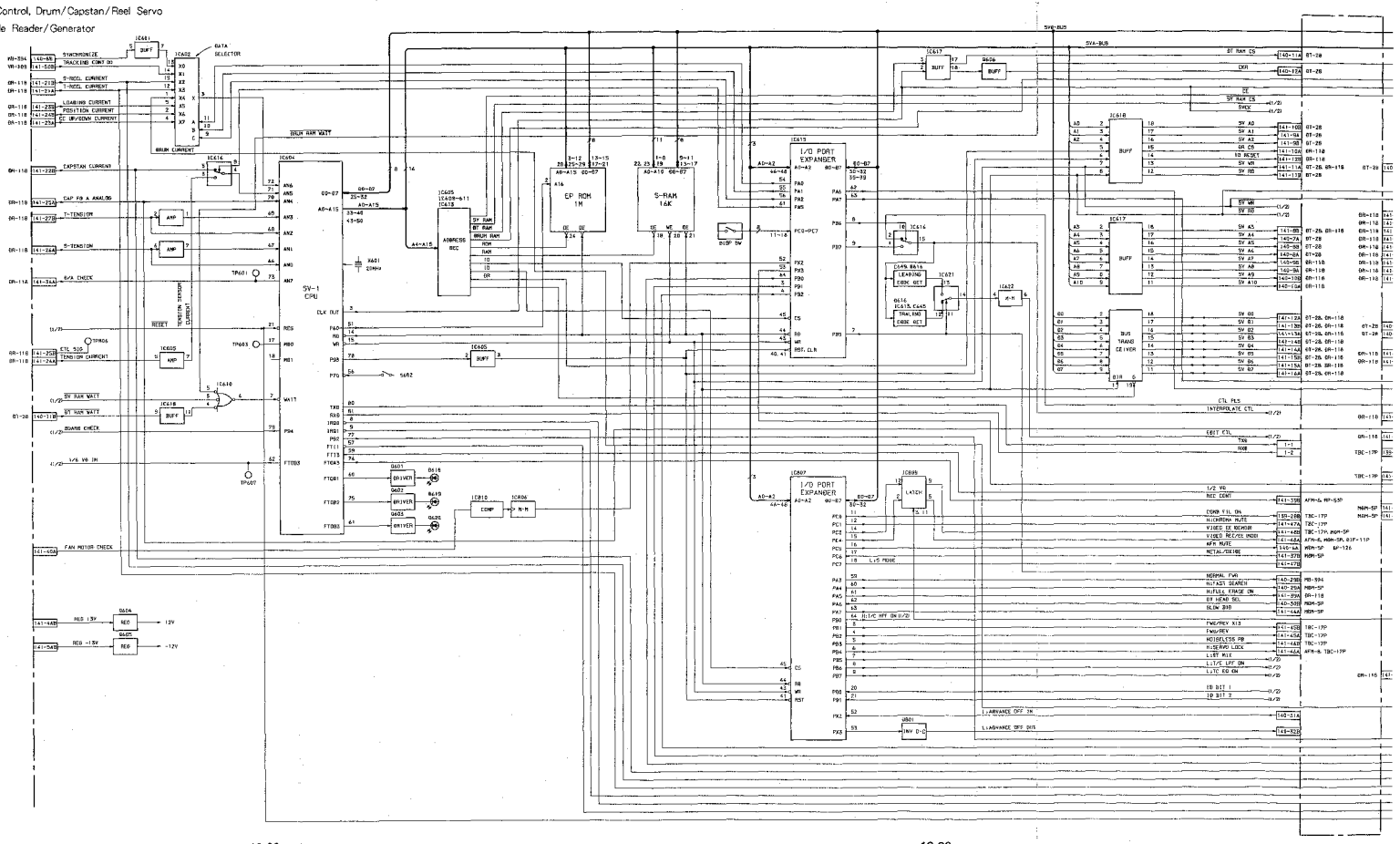

12-20

SS-48DP (2/2) BLOCK DIAGRAM

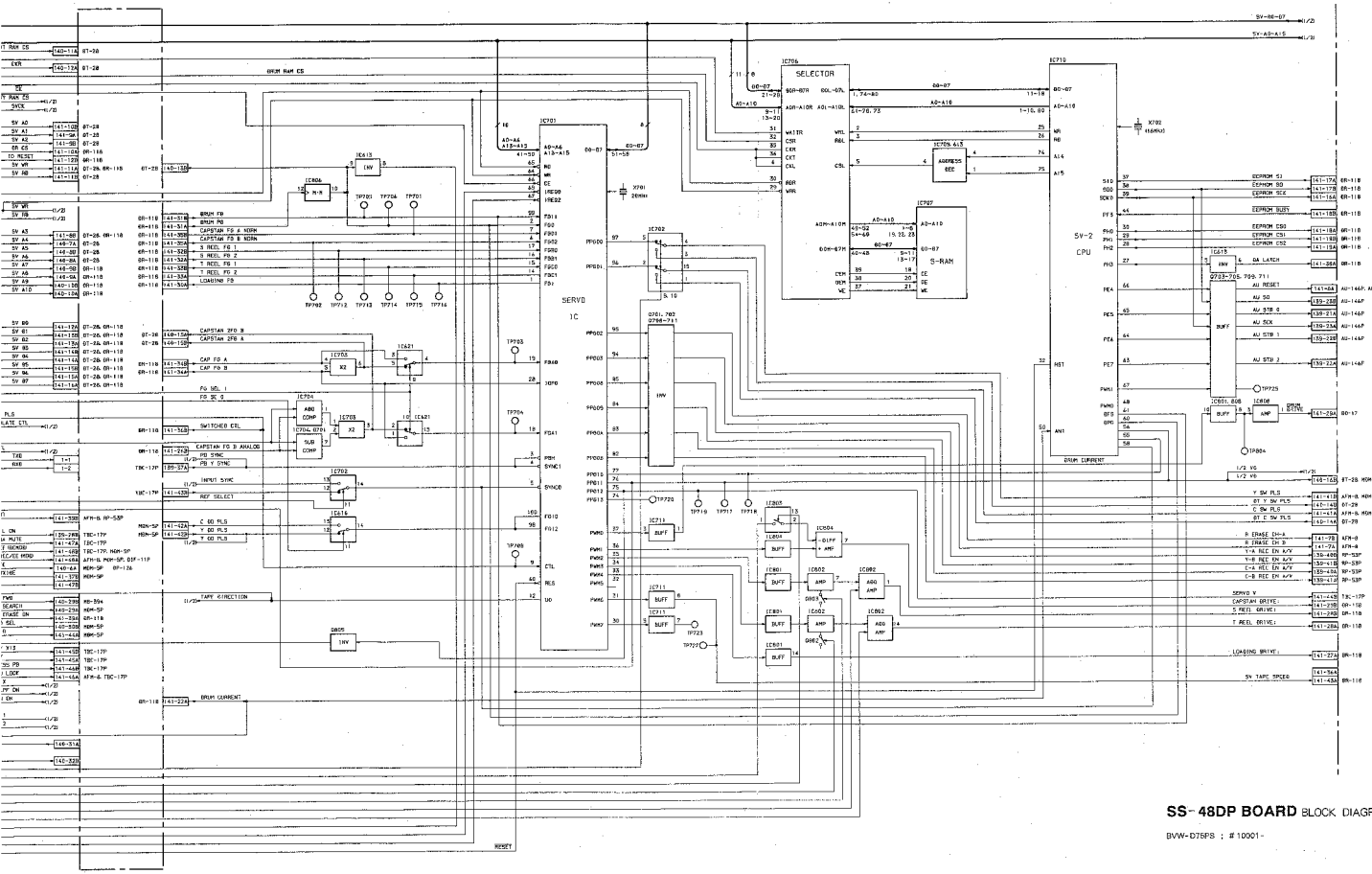

SS-48DP BOARD BLOCK DIAGRAM **(2/2)**

BVW-D75PS : # 10001-

12-20

DR-118B BOARD

Drum error Amplifier Threading Motor Drive, Capstan/Reel Motor Drive, Top/End Sensor

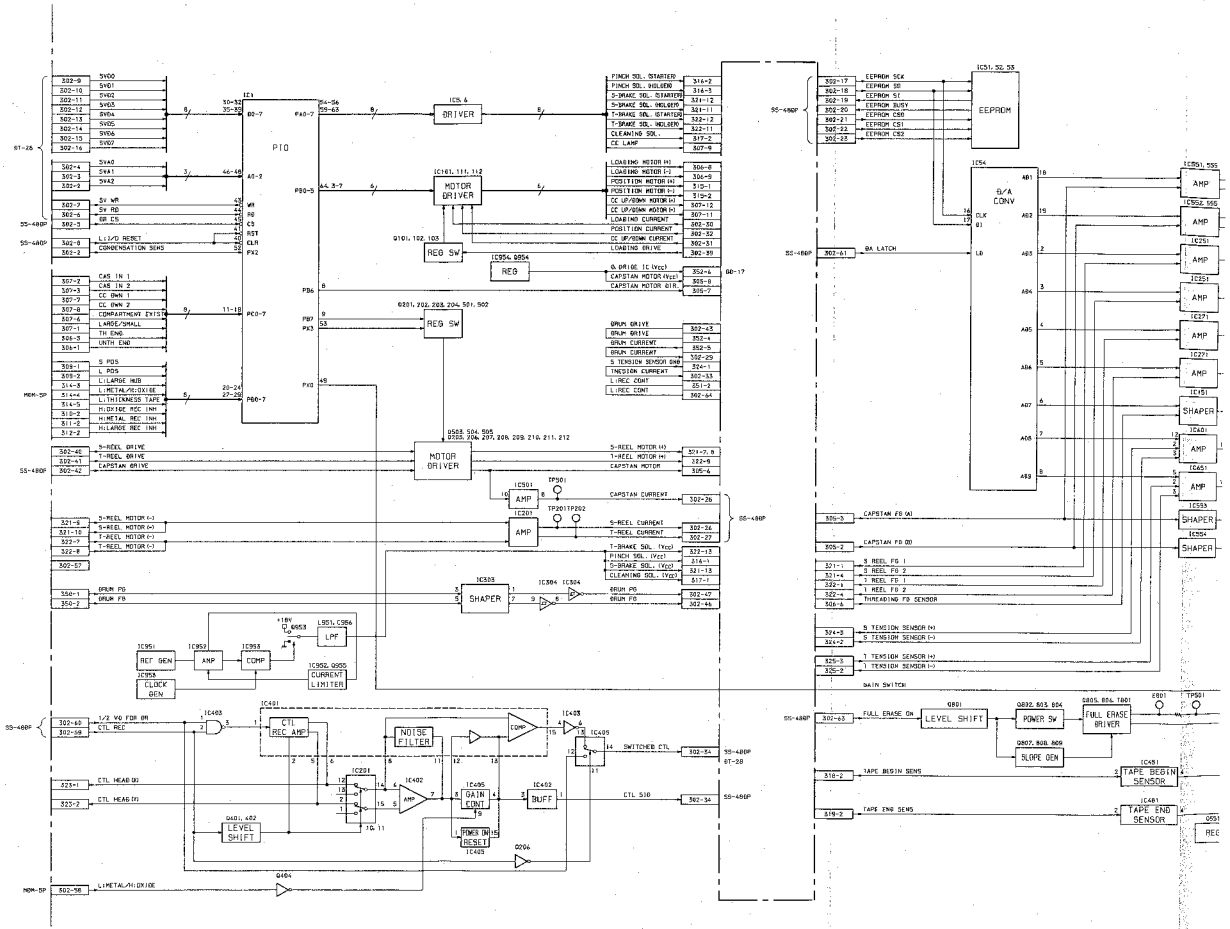

12-21

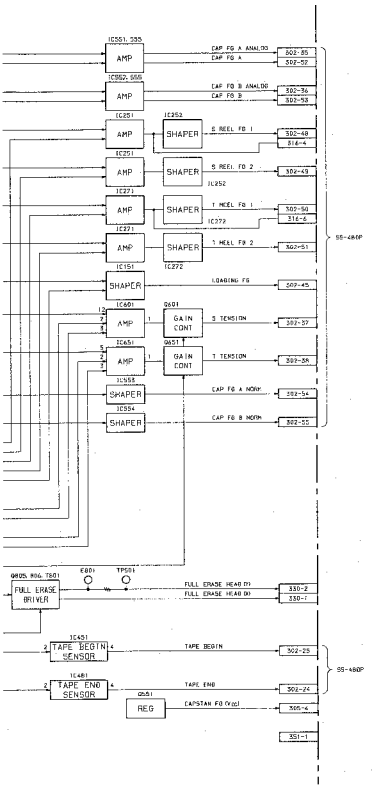

DR-118B BOARD BLOCK DIAGRAM

BVW-D75PS ; # 10001-

12-21

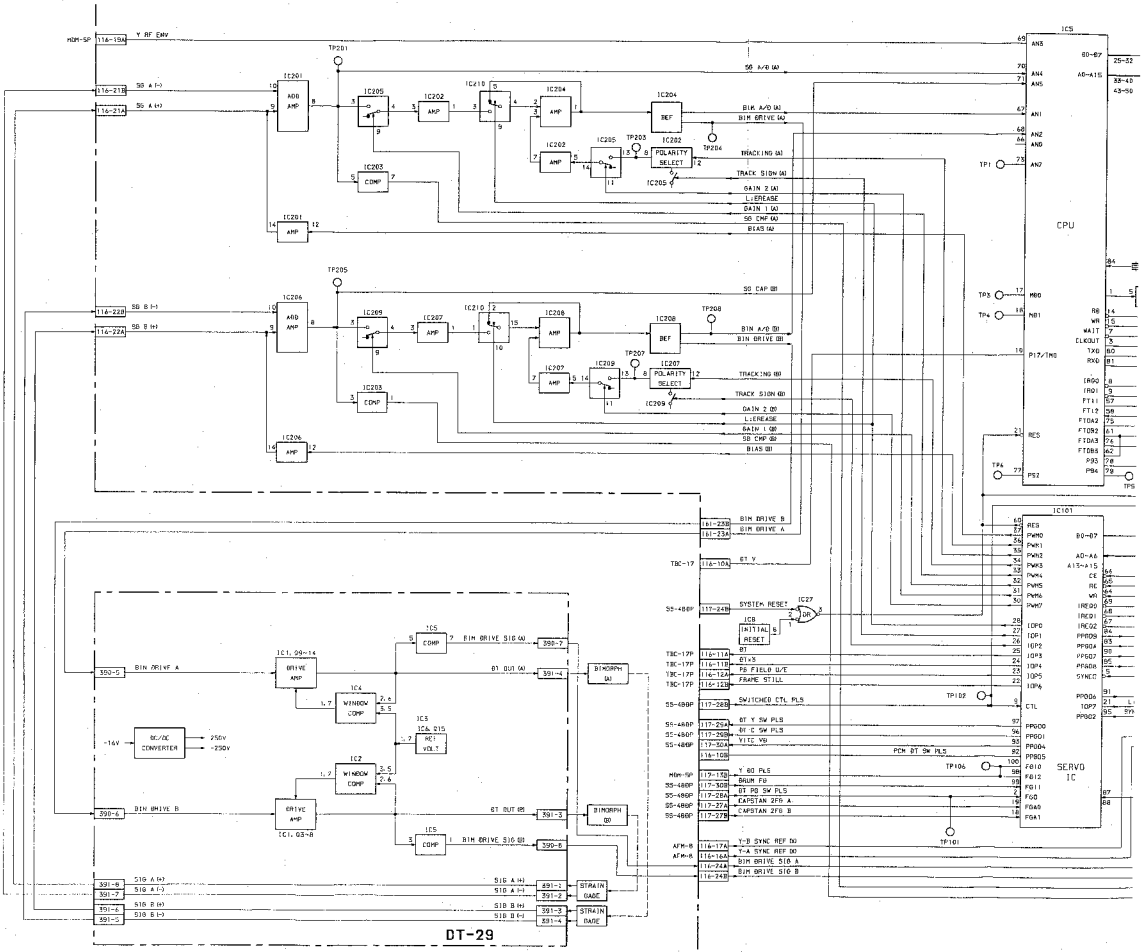
DT-29
CPU
SERVO IC
TP201
TP202
TP203
TP204
TP205
TP206
TP207
TP208
TP1
TP2
TP3
TP4
TP5
TP6
TP101
TP102
TP106
IC201
IC202
IC203
IC204
IC205
IC206
IC207
IC208
IC209
IC210
IC1, 99~14
IC1, 63~8
IC2
IC4
IC5
IC6, 215
IC8
IC27
IC101
ADD AMP
AMP
COMP
REF
POLARITY SELECT
DRIVE AMP
WINDOW COMP
ACT VOLT
DC/DC CONVERTER
INITIAL RESET
SYSTEM RESET
BIMORPH (A)
BIMORPH (B)
STRAIN GAGE
Y RF ENV
SG A (+)
SG A (-)
SG A/D (A)
BIN A/D (A)
BIN DRIVE (A)
TRACKING (A)
TRACK SIGN (A)
GAIN 2 (A)
L/LEREASE
GAIN 1 (A)
SG CMP (A)
BIAS (A)
SG B (+)
SG B (-)
SG CAP (B)
BIN A/D (B)
BIN DRIVE (B)
TRACKING (B)
TRACK SIGN (B)
GAIN 2 (B)
L/LEREASE
GAIN 1 (B)
SG CMP (B)
BIAS (B)
BIN DRIVE A
BIN DRIVE B
BIN DRIVE SIG (A)
BIN DRIVE SIG (B)
BT OUT (A)
BT OUT (B)
SIG A (+)
SIG A (-)
SIG B (+)
SIG B (-)
BT Y
BT
BT×3
FB FIELD G/E
FRAME STILL
SWITCHED CTL PLS
BT Y SW PLS
BT C SW PLS
V.I.C. V0
PCM DT SW PLS
Y 90 PLS
BEAM FB
BT PG SW PLS
CAPSTAN ZFG A
CAPSTAN ZFG B
Y-B SYNC REF (A)
Y-A SYNC REF (A)
BIN DRIVE SIG A
BIN DRIVE SIG B
+16V
-16V
+250V
-250V

12-22

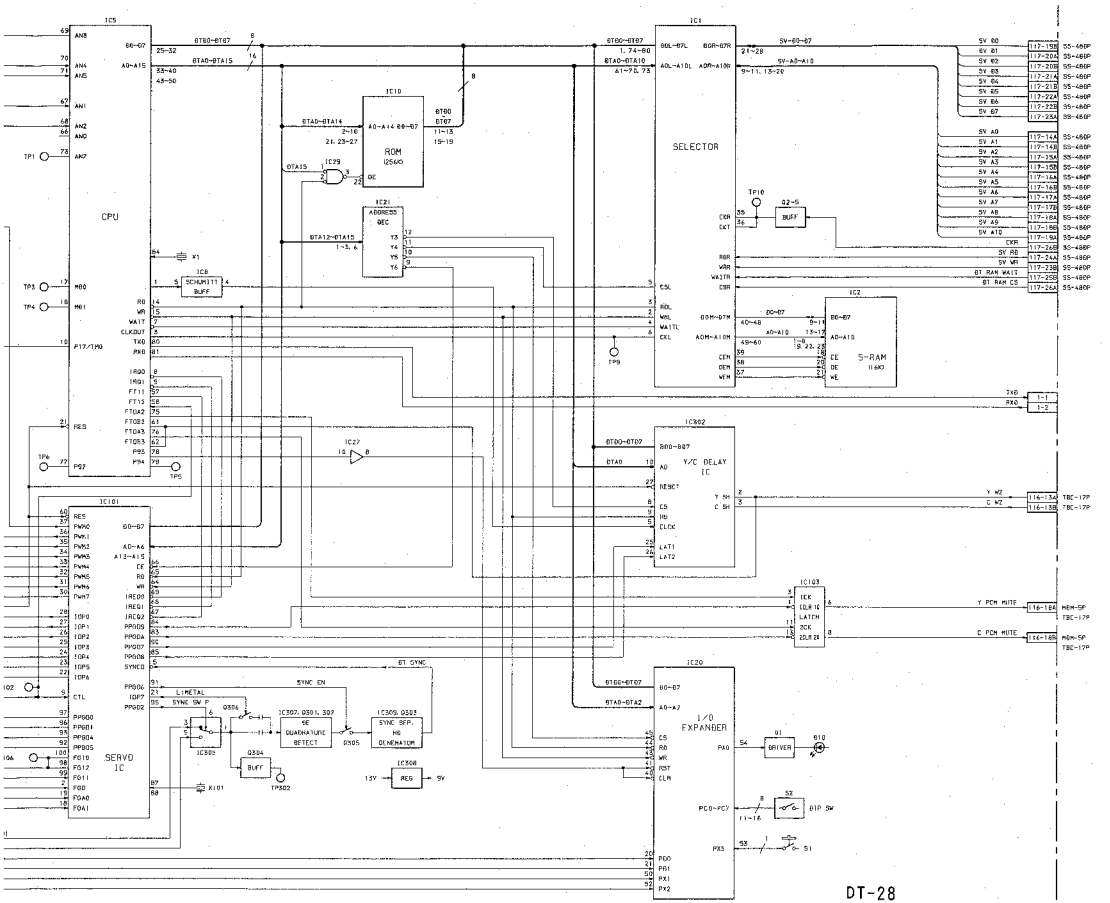

DYNAMIC TRACKING BLOCK DIAGRAM

BVW-D75PS ; # 10001 -

12-22

SECTION 13
PRINTED WIRING BOARD LAYOUT

CIRCUIT CONFIGURATION

The circuit information is provided below.

System	Board	Circuit function
VIDEO	MDM-5P	Modulator, Demodulator
	RP-53P	Video/Audio REC, PB Amplifier
	PA-109	DT Head Amplifier
	TBC-17P	A/D, D/A Memory, W/R Clock Generation
	CP-187	REF Video IN, Monitor OUT
	SWC-11	TBC PROC Control
	DIF-11P	S/P, P/S Converter, 4:2:2 DEC/ENC
	SIP-17	AES/EBU Decoder, Encoder
	DUS-359	Audio Amplifier
	DUS-490	Serial Input Amplifier
AUDIO	CP-175	Audio Input Amplifier
	CP-186	AES/EBU, I/O Buffer, TC Balanced Amplifier
	AFM-8	AFM Audio MOD/DEMOD
	AU-145	Audio Output Amplifier
	AU-146P	Audio PB Process
	AU-147P	Audio REC Process DOLBY-C
	DUS-465	T/C Insert Crosstalk Level ADJ.
	DUS-475	REC Mute
	HP-47	Headphones Amplifier
	VR-110	REC Level VR
	VR-111	PB Level VR
	DP-126	Level Meter
	DP-127	Level Meter
	DP-128	Level Meter
	DP-129	Level Meter
	SWC-10	Select Switch, Display
SERVO/ SYSTEM CONTROL	DP-156	RF Meter LED
	VR-119	Tracking Control VR
	SS-48DP	System Control, Drum/Capstan/Reel Servo
	EQ-42	Time Code Mute
	DT-28	Dynamic Tracking
	DT-29	Dynamic Tracking
	SR-52	Slip Ring
	DR-118B	Drum error Amplifier, Threading Motor Drive, Capstan/Reel Motor Drive, Top/End Sensor

System	Board	Circuit function
SERVO/ SYSTEM CONTROL	DD-17	Drum Motor Drive
	TR-73	Tension Regulator Tension Detection
	RM-82	Reel Motor
	DE-15	Reel FG
	PD-56	Pinch Plunger
	DS-31	Dew (Condensation) Sensor
	PTC-42	Reel Base Large/Small Detection
	PTC-43	REC Inhibit
	PTC-49	Threading End Detection
	PTC-54	Loading Motor Pulse Detection
	PTC-55	Cassette Data Detection
	CL-25	Cassete Down Detection, Up-Down Motor
	LP-57	Cassette Up Compartment Lamp
	PC-62	Cassette-in Detection, Large/Small Cassette Detection
	KY-188D	Keyboard
	KY-205	Keyboard
	KY-206	Keyboard
	DP-136	Time Counter Display
	PTC-39	Search Dial
	PT-9	Power Transistor
	SWC-12P	Hours Meter, Menu Setup
OTHERS	AC-107	Power Supply
	MB-394	Mother Board

13-1

13-1

MDM-5P BOARD (1-640-688-11)

MDM-5P BOARD(1-640-688-11)
BVW-D75PS

CN130	N-7	A	FL1604	F-4	A	IC809	H-3	A	IC1604	F-3	A	Q208	C-4	B	Q413	D-1	B	Q810	J-3	B	Q1513	R-6	B
CN132	C-7	A				IC810	J-3	A	IC1605	E-2	A	Q209	D-4	B	Q414	D-1	B	Q811	J-3	B	Q1514	R-6	B
CN901	M-1	A	HC1101	L-5	A	IC811	H-2	A	IC1606	F-1	A	Q210	D-4	A	Q415	D-1	B	Q812	G-2	B	Q1515	P-6	B
CN902	L-1	A	HC1501	N-5	A	IC901	M-2	A	IC1607	E-2	B	Q211	D-4	A	Q416	B-4	B	Q813	G-2	B	Q1516	P-6	A
						IC902	P-3	A	IC1608	F-2	B	Q212	C-5	A	Q418	C-3	B	Q814	G-1	B	Q1517	P-7	A
COR101	B-7	A	IC101	B-6	A	IC903	M-1	A				Q213	C-5	A	Q501	F-7	B	Q815	G-1	B	Q1518	R-7	B
COR102	B-7	A	IC102	B-7	A	IC904	M-3	A	Q1	A-7	B	Q214	C-5	A	Q502	E-6	B	Q816	H-1	B	Q1519	R-7	B
COR501	F-7	A	IC103	B-5	A	IC905	K-2	A	Q2	A-6	B	Q215	C-5	A	Q503	F-6	B	Q817	H-1	B	Q1520	R-7	B
COR502	F-7	A	IC201	B-4	A	IC906	L-3	A	Q3	A-6	B	Q216	C-5	A	Q504	E-7	B	Q818	J-4	B	Q1521	P-7	B
			IC251	C-6	A	IC907	L-3	A	Q4	A-6	B	Q217	C-5	A	Q505	E-5	B	Q820	H-1	B	Q1522	P-7	A
D251	C-7	B	IC252	D-6	A	IC909	K-3	A	Q21	A-6	B	Q218	D-5	B	Q506	E-7	B	Q821	H-2	B	Q1523	P-6	B
D252	D-6	B	IC253	D-7	A	IC910	K-3	A	Q22	A-6	B	Q219	D-5	B	Q507	E-6	B	Q822	H-2	B	Q1601	E-4	A
D401	D-1	A	IC254	D-6	A	IC911	K-3	A	Q23	B-6	B	Q220	D-5	B	Q508	E-5	B	Q1101	K-7	B	Q1602	E-3	A
D402	B-4	B	IC255	C-6	A	IC912	L-1	A	Q24	A-6	B	Q221	D-5	B	Q509	E-5	B	Q1102	L-6	B	Q1603	E-3	A
D651	H-6	B	IC256	D-7	B	IC913	R-2	A	Q51	E-6	B	Q251	B-5	B	Q510	E-5	B	Q1103	K-6	B	Q1604	E-4	A
D801	H-2	A	IC301	A-3	A	IC914	M-1	A	Q52	E-6	B	Q252	C-5	B	Q511	F-5	B	Q1104	L-5	B	Q1605	E-3	A
D802	G-4	B	IC302	D-3	A	IC915	M-2	A	Q53	E-6	B	Q253	C-6	B	Q512	F-6	B	Q1105	L-5	B	Q1606	E-3	A
D901	L-2	B	IC401	B-3	A	IC916	M-3	A	Q54	E-6	B	Q301	B-4	B	Q513	E-4	B	Q1106	L-5	B	Q1607	E-4	A
			IC402	C-2	A	IC917	R-2	A	Q71	E-6	B	Q302	D-4	B	Q514	E-4	B	Q1107	L-5	B	Q1608	F-3	A
E101	D-5	A	IC403	A-3	A	IC918	P-2	A	Q72	E-6	B	Q303	B-4	B	Q515	F-5	B	Q1108	L-4	B	Q1609	E-3	A
E301	C-3	A	IC404	A-4	A	IC919	P-3	A	Q73	E-6	B	Q304	C-2	B	Q651	F-5	B	Q1110	L-7	B	Q1610	E-3	B
E401	D-1	A	IC405	B-4	A	IC920	R-3	A	Q74	E-6	B	Q305	C-2	B	Q652	G-5	A	Q1111	M-6	B	Q1611	E-4	B
E501	H-6	A	IC406	C-2	A	IC921	P-2	A	Q101	B-7	B	Q306	C-2	B	Q653	G-7	B	Q1112	N-6	B	Q1612	F-4	A
E701	H-5	A	IC407	B-1	A	IC922	L-2	A	Q102	B-6	B	Q307	C-2	A	Q702	G-4	B	Q1113	M-6	A	Q1613	F-3	A
			IC408	C-2	A	IC923	R-3	A	Q103	B-6	B	Q308	C-2	B	Q703	G-4	A	Q1114	M-5	B	Q1614	F-3	A
FL101	B-6	A	IC409	C-2	A	IC1051	J-5	A	Q104	A-7	B	Q309	C-2	B	Q704	G-5	B	Q1115	M-6	A	Q1615	E-3	B
FL102	A-5	A	IC410	D-1	A	IC1052	J-7	A	Q105	A-5	B	Q310	D-2	A	Q705	H-4	B	Q1116	M-6	B	Q1616	F-4	B
FL103	B-5	A	IC411	C-1	A	IC1054	J-6	A	Q106	A-7	B	Q311	D-2	A	Q706	H-4	A	Q1117	M-6	B	Q1629	E-2	B
FL401	C-3	A	IC412	D-1	A	IC1055	J-4	A	Q107	A-5	B	Q312	D-2	A	Q707	H-5	A	Q1118	M-6	B	Q1630	D-2	B
FL402	D-3	A	IC501	F-6	A	IC1056	J-5	A	Q108	A-5	B	Q313	D-3	B	Q708	G-4	B	Q1119	N-6	A	Q1631	D-1	B
FL403	A-2	A	IC502	G-5	A	IC1101	M-5	A	Q109	A-4	B	Q314	D-2	B	Q709	G-4	A	Q1120	M-6	B	Q1632	E-1	B
FL404	B-2	A	IC503	F-5	A	IC1103	N-5	A	Q110	A-4	B	Q315	D-2	B	Q710	G-5	A	Q1121	M-5	B	Q1633	E-1	B
FL501	F-6	A	IC651	H-6	A	IC1104	L-6	A	Q111	B-5	B	Q401	C-3	B	Q711	G-4	B	Q1501	N-6	A	Q1634	F-2	B
FL502	E-5	A	IC652	F-6	A	IC1105	M-6	A	Q112	A-5	B	Q402	C-3	B	Q712	G-4	A	Q1502	P-7	B			
FL503	F-6	A	IC653	H-7	A	IC1106	L-7	A	Q113	C-5	B	Q403	C-3	B	Q713	G-5	A	Q1503	N-6	B	RV1	A-6	A
FL801	J-4	A	IC701	F-3	A	IC1107	M-7	A	Q114	C-5	A	Q404	B-2	B	Q801	H-4	B	Q1504	N-6	B	RV2	A-6	A
FL802	J-4	A	IC702	G-5	A	IC1108	K-6	A	Q115	A-5	B	Q405	B-2	B	Q802	H-4	B	Q1505	N-6	A	RV21	B-6	A
FL803	G-2	A	IC801	G-3	A	IC1501	P-5	A	Q201	B-4	B	Q406	B-2	B	Q803	J-4	B	Q1506	P-5	B	RV22	B-6	A
FL804	G-2	A	IC802	H-4	A	IC1502	P-6	A	Q202	B-5	B	Q407	A-3	B	Q804	H-3	B	Q1507	N-5	B	RV51	E-6	A
FL1101	K-7	A	IC803	H-1	A	IC1503	R-6	A	Q203	B-5	B	Q408	B-3	B	Q805	H-3	A	Q1508	P-5	B	RV52	E-6	A
FL1501	N-7	A	IC804	J-2	A	IC1504	R-7	A	Q204	C-5	B	Q409	A-1	B	Q806	H-3	A	Q1509	P-4	B	RV71	E-6	A
FL1601	E-4	A	IC805	H-2	A	IC1601	E-4	B	Q205	C-5	B	Q410	B-1	B	Q807	H-3	B	Q1510	R-6	A	RV72	E-6	A
FL1602	E-4	A	IC806	H-3	A	IC1602	E-4	B	Q206	C-5	B	Q411	C-1	B	Q808	H-3	A	Q1511	R-6	B	RV251	B-5	A
FL1603	E-4	A	IC807	G-4	A	IC1603	F-4	B	Q207	C-5	B	Q412	C-1	B	Q809	J-3	A	Q1512	R-6	B	RV252	C-5	A

RV255	C-6	A	RV1113	M-5	A	TP201	C-4	A	TP904	L-2	A	X703	H-5	A
RV257	C-7	A	RV1114	M-5	A	TP202	C-5	A	TP905	L-2	A	X704	H-5	A
RV261	C-5	A	RV1115	L-4	A	TP203	C-7	A	TP906	L-2	A	X901	M-2	A
RV262	C-5	A	RV1117	M-6	A	TP251	C-6	A	TP907	L-2	A			
RV265	C-6	A	RV1501	P-1	A	TP253	D-7	A	TP908	L-2	A			
RV266	C-7	A	RV1502	P-1	A	TP254	C-7	A	TP909	L-1	A			
RV267	C-7	A	RV1503	N-6	A	TP255	C-7	A	TP910	L-2	A			
RV301	B-3	A	RV1508	P-4	A	TP256	C-6	A	TP911	K-3	A			
RV303	A-3	A	RV1509	N-4	A	TP257	D-6	A	TP912	K-3	A			
RV304	A-4	A	RV1510	N-4	A	TP301	A-4	A	TP1101	K-7	A			
RV401	C-4	A	RV1511	R-5	A	TP302	C-4	A	TP1102	L-6	A			
RV406	B-3	A	RV1512	R-4	A	TP401	C-3	A	TP1103	M-6	A			
RV411	B-1	A	RV1513	R-5	A	TP402	C-3	A	TP1105	K-6	A			
RV412	C-1	A	RV1514	P-5	A	TP403	B-2	A	TP1106	L-6	A			
RV413	A-3	A	RV1515	P-4	A	TP404	C-1	A	TP1107	L-6	A			
RV414	C-3	A	RV1517	P-7	A	TP405	D-1	A	TP1110	L-5	A			
RV417	D-1	A	RV1601	E-3	A	TP407	D-3	A	TP1112	M-7	A			
RV651	G-5	A	RV1602	E-3	A	TP411	A-3	A	TP1115	L-4	A			
RV652	H-5	A	RV1604	D-4	A	TP412	B-5	A	TP1121	M-6	A			
RV655	G-6	A	RV1606	E-4	A	TP413	A-4	A	TP1122	M-7	A			
RV657	G-7	A	RV1607	E-3	A	TP501	F-7	A	TP1125	M-5	A			
RV661	H-7	A	RV1608	F-3	A	TP503	F-7	A	TP1501	N-7	A			
RV662	H-6	A	RV1611	E-2	A	TP504	F-7	A	TP1502	N-6	A			
RV665	G-7	A	RV1612	E-1	A	TP507	F-5	A	TP1503	P-7	A			
RV666	G-7	A	RV1613	E-1	A	TP510	F-4	A	TP1506	P-6	A			
RV701	F-3	A	RV1614	F-2	A	TP511	F-4	A	TP1510	N-5	A			
RV703	F-4	A				TP651	G-6	A	TP1515	P-4	A			
RV704	F-4	A	S401	B-1	A	TP652	H-6	A	TP1521	P-5	A			
RV801	G-4	A	S801	G-1	A	TP653	H-6	A	TP1522	R-7	A			
RV811	J-1	A	S901	L-1	A	TP654	G-7	A	TP1525	P-6	A			
RV812	H-1	A	S902	K-1	A	TP655	G-7	A	TP1601	E-1	A			
RV814	F-3	A	S1601	E-4	A	TP656	G-6	A	TP1602	D-4	A			
RV817	G-1	A	S1602	E-4	A	TP657	D-6	A	TP1603	E-4	A			
RV1101	N-1	A	S1603	E-1	A	TP701	G-4	A	TP1604	E-1	A			
RV1102	P-1	A	S1604	F-1	A	TP702	G-4	A	TP1605	F-1	A			
RV1103	K-6	A				TP801	H-4	A	TP1606	E-1	A			
RV1105	M-4	A	TH901	M-2	A	TP802	G-3	A	TP1607	F-1	A			
RV1106	M-4	A				TP803	J-1	A			
RV1107	L-6	A	TP101	C-7	A	TP804	H-2	A	X301	D-3	A
RV1108	L-4	A	TP103	B-5	A	TP805	J-1	A	X302	D-3	A
RV1109	K-4	A	TP104	B-7	A	TP812	H-3	A	X303	D-2	A
RV1110	K-5	A	TP107	B-5	A	TP901	N-1	A	X304	D-2	A
RV1111	M-4	A	TP110	C-5	A	TP902	K-3	A	X701	G-5	A
RV1112	M-4	A	TP111	B-5	A	TP903	K-3	A	X702	G-5	A

NOTE :

A : A Side

B : B Side

A Side

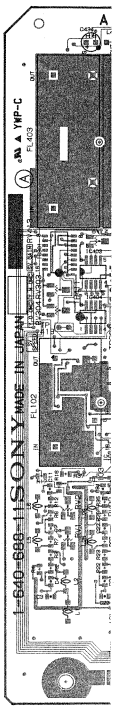

(1-640-688-11)

13-2

A Side

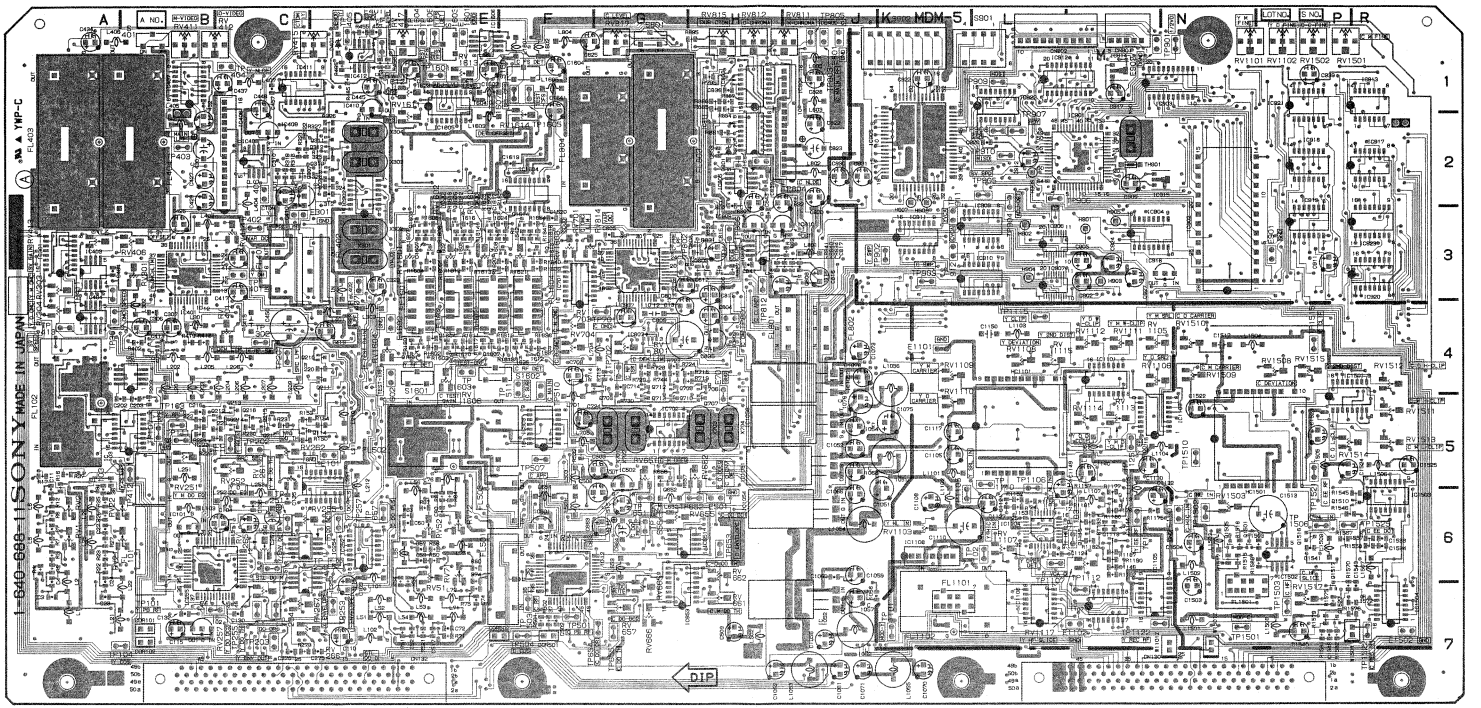

(1-640-688-11) A SIDE

13-2

MDM-5P BOARD (1-640-688-11)

B Side

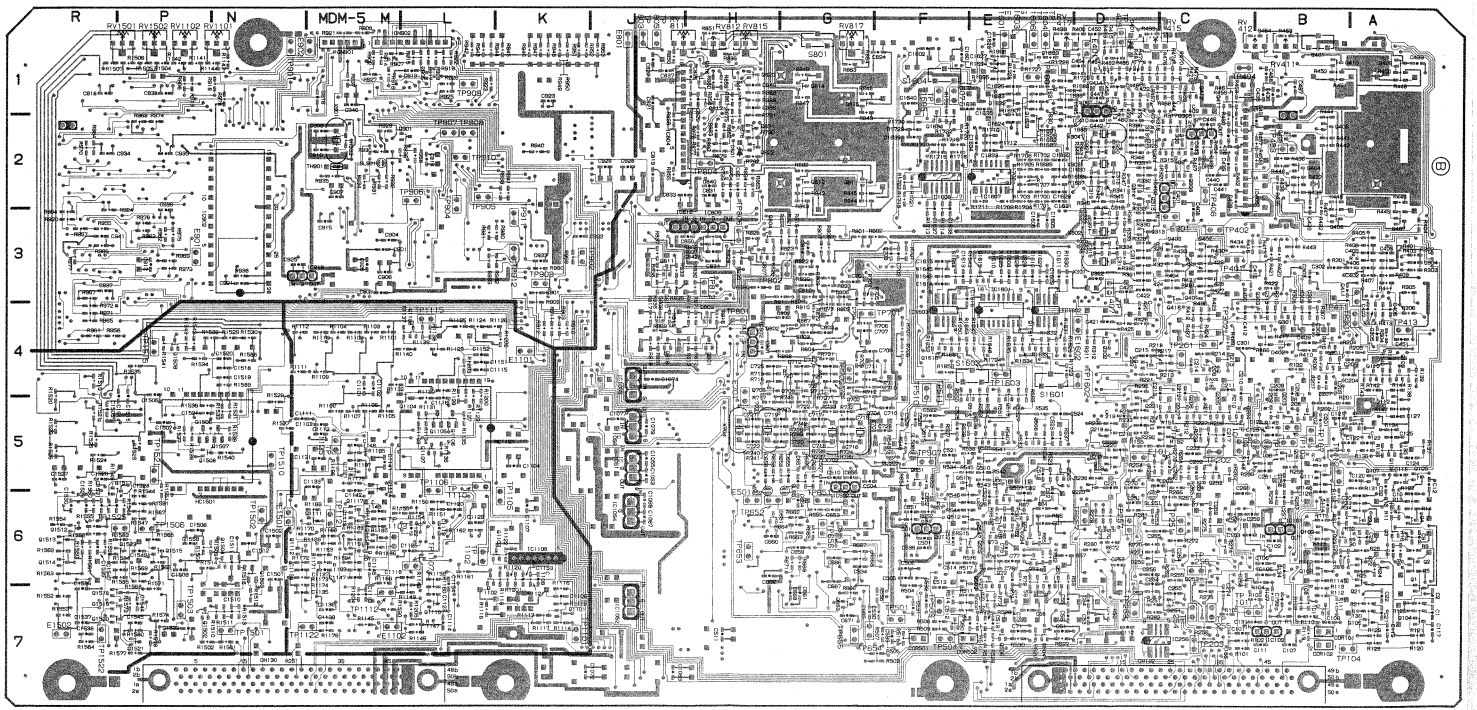

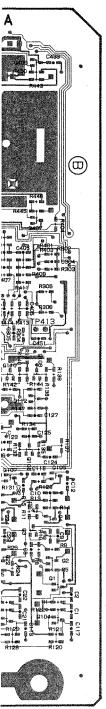

MDM-5P BOARD (1-640-688-11)
BVW-D75PS

CN130 N-7 A
CN132 C-7 A
CN901 M-1 A
CN902 L-1 A

COR101 B-7 A
COR102 B-7 A
COR501 F-7 A
COR502 F-7 A

D251 C-7 B
D252 D-6 B
D401 D-1 A
D402 B-4 B
D651 H-6 B
D801 H-2 A
D802 G-4 B
D901 L-2 B

E101 D-5 A
E301 C-3 A
E401 D-1 A
E501 H-6 A
E701 H-5 A

FL101 B-6 A
FL102 A-5 A
FL103 B-5 A
FL401 C-3 A
FL402 D-3 A
FL403 A-2 A
FL404 B-2 A
FL501 F-6 A
FL502 E-5 A
FL503 F-6 A
FL801 J-4 A
FL802 J-4 A
FL803 G-2 A
FL804 G-2 A
FL1101 K-7 A
FL1501 N-7 A
FL1601 E-4 A
FL1602 E-4 A
FL1603 E-4 A

FL1604 F-4 A

HC1101 L-5 A
HC1501 N-5 A

IC101 B-6 A
IC102 B-7 A
IC103 B-5 A
IC201 B-4 A
IC251 C-6 A
IC252 D-6 A
IC253 D-7 A
IC254 D-6 A
IC255 C-6 A
IC256 D-7 B
IC301 A-3 A
IC302 D-3 A
IC401 B-3 A
IC402 C-2 A
IC403 A-3 A
IC404 A-4 A
IC405 B-4 A
IC406 C-2 A
IC407 B-1 A
IC408 C-2 A
IC409 C-2 A
IC410 D-1 A
IC411 C-1 A
IC412 D-1 A
IC501 F-6 A
IC502 G-5 A
IC503 F-5 A
IC651 H-6 A
IC652 F-6 A
IC653 H-7 A
IC701 F-3 A
IC702 G-5 A
IC801 G-3 A
IC802 H-4 A
IC803 H-1 A
IC804 J-2 A
IC805 H-2 A
IC806 H-3 A
IC807 G-4 A
IC809 H-3 A
IC810 J-3 A
IC811 H-2 A
IC901 M-2 A
IC902 P-3 A
IC903 M-1 A
IC904 M-3 A
IC905 K-2 A
IC906 L-3 A
IC907 L-3 A
IC909 K-3 A
IC910 K-3 A
IC911 K-3 A
IC912 L-1 A
IC913 R-2 A
IC914 M-1 A
IC915 N-2 A
IC916 M-3 A
IC917 R-2 A
IC918 P-2 A
IC919 P-3 A
IC920 R-3 A
IC921 P-2 A
IC922 L-2 A
IC923 R-3 A
IC1051 J-5 A
IC1052 J-7 A
IC1054 J-6 A
IC1055 J-4 A
IC1056 J-5 A
IC1101 M-5 A
IC1103 N-5 A
IC1104 L-6 A
IC1105 M-6 A
IC1106 L-7 A
IC1107 M-7 A
IC1108 K-6 A
IC1501 P-5 A
IC1502 P-6 A
IC1503 R-6 A
IC1504 R-7 A
IC1601 E-4 B
IC1602 E-4 B
IC1603 F-4 B
IC1604 F-3 A
IC1605 E-2 A
IC1606 F-1 A
IC1607 E-2 B
IC1608 F-2 B

01 A-7 B
02 A-6 B
03 A-6 B
04 A-6 B
021 A-6 B
022 A-6 B
023 B-6 B
024 A-6 B
051 E-6 B
052 E-6 B
053 E-6 B
054 E-6 B
071 E-6 B
072 E-6 B
073 E-6 B
074 E-6 B
0101 B-7 B
0102 B-6 B
0103 B-6 B
0104 A-7 B
0105 A-5 B
0106 A-7 B
0107 A-5 B
0108 A-5 B
0109 A-4 B
0110 A-4 B
0111 B-5 B
0112 A-5 B
0113 C-5 B
0114 C-5 A
0115 A-5 B
0201 B-4 B
0202 B-5 B
0203 B-5 B
0204 C-5 B
0205 C-5 B
0206 C-5 B
0207 C-5 B
0208 C-4 B
0209 D-4 A
0210 D-4 A
0211 D-4 A
0212 C-5 A
0213 C-5 A
0214 C-5 A
0215 C-5 A
0216 C-5 A
0217 C-5 A
0218 D-5 B
0219 D-5 B
0220 D-5 B
0221 D-5 B
0251 B-5 B
0252 C-5 B
0253 C-6 B
0301 B-4 B
0302 D-4 B
0303 B-4 B
0304 C-2 B
0305 C-2 B
0306 C-2 B
0307 C-2 A
0308 C-2 B
0309 C-2 B
0310 D-2 A
0311 D-2 A
0312 D-2 A
0313 D-3 B
0314 D-2 B
0315 D-2 B
0401 C-3 B
0402 C-3 B
0403 C-3 B
0404 B-2 B
0405 B-2 B
0406 B-2 B
0407 A-3 B
0408 B-3 B
0409 A-1 B
0410 B-1 B
0411 C-1 B
0412 C-1 B
0413 D-1 B
0414 D-1 B
0415 D-1 B
0416 B-4 B
0417 C-3 B
0418 C-3 B
0501 F-7 B
0502 E-6 B
0503 F-6 B
0504 E-7 B
0505 E-5 B
0506 E-7 B
0507 E-6 B
0508 E-5 B
0509 E-5 B
0510 E-5 B
0511 F-5 B
0512 F-6 B
0513 E-4 B
0514 E-4 B
0515 F-5 B
0651 F-5 B
0652 G-5 A
0653 G-7 B
0702 G-4 B
0703 G-4 A
0704 G-5 B
0705 H-4 B
0706 H-4 A
0707 H-5 A
0708 G-4 B
0709 G-4 A
0710 G-5 A
0711 G-4 B
0712 G-4 A
0713 G-5 A
0801 H-4 B
0802 H-4 B
0803 J-4 B
0804 H-3 B
0805 H-3 A
0806 H-3 A
0807 H-3 B
0808 H-3 A
0809 J-3 A
0810 J-3 B
0811 J-3 B
0812 G-2 B
0813 G-2 B
0814 G-1 B
0815 G-1 B
0816 H-1 B
0817 H-1 B
0818 J-4 B
0820 H-1 B
0821 H-2 B
0822 H-2 B
01101 K-7 B
01102 L-6 B
01103 K-6 B
01104 L-5 B
01105 L-5 B
01106 L-5 B
01107 L-5 B
01108 L-4 B
01109 E-3 A
01110 L-7 B
01111 M-6 B
01112 N-6 B
01113 M-6 A
01114 M-5 B
01115 M-6 A
01116 M-6 B
01117 M-6 B
01118 M-6 B
01119 M-6 A
01120 M-6 B
01121 M-5 B
01501 N-6 A
01502 P-7 B
01503 N-6 B
01504 N-6 B
01505 N-6 A
01506 P-5 B
01507 N-5 B
01508 P-5 B
01509 P-4 B
01510 R-6 A
01511 R-6 B
01512 R-6 B
01513 R-6 B
01514 R-6 B
01515 P-6 B
01516 P-6 A
01517 P-7 A
01518 R-7 B
01519 R-7 B
01520 R-7 B
01521 P-7 B
01522 P-7 A
01523 P-6 B
01601 E-4 A
01602 E-3 A
01603 E-3 A
01604 E-4 A
01605 E-3 A
01606 E-3 A
01607 E-4 A
01608 F-3 A
01609 E-3 A
01610 E-3 B
01611 E-4 B
01612 F-4 A
01613 F-3 A
01614 F-3 A
01615 E-3 B
01616 F-4 B
01629 E-2 B
01630 D-2 B
01631 D-1 B
01632 E-1 B
01633 E-1 B
01634 F-2 B

RV1 A-6 A
RV2 A-6 A
RV21 B-6 A
RV22 B-6 A
RV51 E-6 A
RV52 E-6 A
RV71 E-6 A
RV72 E-6 A
RV251 B-5 A
RV252 C-5 A
RV255 C-6 A
RV257 C-7 A
RV261 C-5 A
RV262 C-5 A
RV265 C-6 A
RV266 C-7 A
RV267 C-7 A
RV301 B-3 A
RV303 A-3 A
RV304 A-4 A
RV401 C-4 A
RV406 B-3 A
RV411 B-1 A
RV412 C-1 A
RV413 A-3 A
RV414 C-3 A
RV417 D-1 A
RV651 G-5 A
RV652 H-5 A
RV655 G-6 A
RV657 G-7 A
RV661 H-7 A
RV662 H-6 A
RV665 G-7 A
RV666 G-7 A
RV701 F-3 A
RV703 F-4 A
RV704 F-4 A
RV801 G-4 A
RV811 J-1 A
RV812 H-1 A
RV814 F-3 A
RV817 G-1 A
RV1101 N-1 A
RV1102 P-1 A
RV1103 K-6 A
RV1105 M-4 A
RV1106 M-4 A
RV1107 L-6 A
RV1108 L-4 A
RV1109 K-4 A
RV1110 K-5 A
RV1111 M-4 A
RV1112 M-4 A
RV1113 M-5 A
RV1114 M-5 A
RV1115 L-4 A
RV1117 M-6 A
RV1501 P-1 A
RV1502 P-1 A
RV1503 N-6 A
RV1508 P-4 A
RV1509 N-4 A
RV1510 N-4 A
RV1511 R-5 A
RV1512 R-4 A
RV1513 R-5 A
RV1514 P-5 A
RV1515 P-4 A
RV1517 P-7 A
RV1601 E-3 A
RV1602 E-3 A
RV1604 D-4 A
RV1606 E-4 A
RV1607 E-3 A
RV1608 F-3 A
RV1611 E-2 A
RV1612 E-1 A
RV1613 E-1 A
RV1614 F-2 A

S401 B-1 A
S801 G-1 A
S901 L-1 A
S902 K-1 A
S1601 E-4 A
S1602 E-4 A
S1603 E-1 A
S1604 F-1 A

TH901 M-2 A

TP101 C-7 A
TP103 B-5 A
TP104 B-7 A
TP107 B-5 A
TP110 C-5 A
TP111 B-5 A
TP201 C-4 A
TP202 C-5 A
TP203 C-7 A
TP251 C-6 A
TP253 D-7 A
TP254 C-7 A
TP255 C-7 A
TP256 C-6 A
TP257 D-6 A
TP301 A-4 A
TP302 C-4 A
TP401 C-3 A
TP402 C-3 A
TP403 B-2 A
TP404 C-1 A
TP405 D-1 A
TP407 D-3 A
TP411 A-3 A
TP412 B-5 A
TP413 A-4 A
TP501 F-7 A
TP503 F-7 A
TP504 F-7 A
TP507 F-5 A
TP510 F-4 A
TP511 F-4 A
TP651 G-6 A
TP652 H-6 A
TP653 H-6 A
TP654 G-7 A
TP655 G-7 A
TP656 G-6 A
TP657 D-6 A
TP701 G-4 A
TP702 G-4 A
TP801 H-4 A
TP802 G-3 A
TP803 J-1 A
TP804 H-2 A
TP805 J-1 A
TP812 H-3 A
TP901 M-1 A
TP902 K-3 A
TP903 K-3 A
TP904 L-2 A
TP905 L-2 A
TP906 L-2 A
TP907 L-2 A
TP908 L-2 A
TP909 L-1 A
TP910 L-2 A
TP911 K-3 A
TP912 K-3 A
TP1101 K-7 A
TP1102 L-6 A
TP1103 M-6 A
TP1105 K-6 A
TP1106 L-6 A
TP1107 L-6 A
TP1110 L-5 A
TP1112 M-7 A
TP1115 L-4 A
TP1121 M-6 A
TP1122 M-7 A
TP1125 M-5 A
TP1501 M-7 A
TP1502 N-6 A
TP1503 P-7 A
TP1506 P-6 A
TP1510 N-5 A
TP1515 P-4 A
TP1521 P-5 A
TP1522 R-7 A
TP1525 P-6 A
TP1601 E-1 A
TP1602 D-4 A
TP1603 E-4 A
TP1604 E-1 A
TP1605 F-1 A
TP1606 E-1 A
TP1607 F-1 A

X703 H-5 A
X704 H-5 A
X901 M-2 A

X301 D-3 A
X302 D-3 A
X303 D-2 A
X304 D-2 A
X701 G-5 A
X702 G-5 A

NOTE :
A : A Side
B : B Side

13-3

RP-53P BOARD (1-640-684-11)

P-53P BOARD(1-640-684-11)
BVW-D75PS

[illegible]	C-5	A	IC2	C-5	A	Q3	C-4	B	Q724	D-6	B	S2	C-4	A	TP411	E-2	A
[illegible]	B-5	A	IC3	C-3	A	Q4	C-4	B	Q725	D-6	B	S3	B-4	A	TP412	E-2	A
CN31	F-2	A	IC4	B-5	A	Q5	C-4	B	Q751	D-7	B	S101	A-4	A	TP413	D-2	A
CN41	E-2	A	IC5	B-2	A	Q6	B-2	B	Q752	D-7	B	S102	A-4	A	TP451	D-4	A
[illegible]	F-5	A	IC6	A-2	A	Q9	A-1	B	Q753	G-6	B	S351	G-2	A	TP501	G-5	A
[illegible]	E-5	A	IC7	C-2	A	Q101	A-2	B	Q754	G-6	B	S451	D-2	A	TP601	D-5	A
CN71	E-6	A	IC8	A-2	A	Q102	B-2	B				S501	F-5	A	TP701	F-6	A
[illegible]01	A-5	A	IC9	C-6	A	Q103	B-3	B	RV1	C-4	A	S601	E-4	A	TP702	F-6	A
[illegible]02	A-5	A	IC10	D-7	A	Q104	A-2	B	RV2	C-4	A				TP703	E-6	A
CN120	F-7	A	IC11	A-7	A	Q105	A-3	B	RV3	C-4	A	T1	C-5	A			
[illegible]21	B-7	A	IC12	A-7	A	Q106	B-4	B	RV4	C-4	A	T2	C-5	A			
			IC15	C-2	A	Q107	B-4	B	RV5	C-4	A	T3	C-5	A			
D1	C-4	B	IC16	C-3	A	Q108	A-4	B	RV6	B-4	A	T4	C-5	A			
D2	C-4	B	IC17	B-3	A	Q109	A-4	B	RV7	C-6	A	T101	B-5	A			
	C-4	B	IC101	B-3	A	Q301	G-1	A	RV8	C-6	A	T102	B-5	A			
[illegible]	C-4	B	IC102	A-3	A	Q302	F-1	A	RV101	B-4	A	T103	A-5	A			
D5	C-7	B	IC103	A-5	A	Q311	F-2	B	RV102	B-4	A	T104	A-5	A			
	D-7	B	IC104	A-5	A	Q351	F-2	B	RV103	A-4	A	T301	G-2	A			
	A-6	B	IC115	B-2	A	Q355	G-4	B	RV104	A-4	A	T401	D-2	A			
D8	A-7	B	IC116	B-3	A	Q356	F-4	B	RV105	B-4	A						
[illegible]01	B-4	B	IC117	A-3	A	Q357	F-4	B	RV106	A-4	A	TP1	C-2	A			
D2	B-4	B	IC311	F-1	A	Q358	F-4	B	RV107	B-6	A	TP2	D-1	A			
D103	A-4	B	IC312	F-2	A	Q359	F-4	B	RV108	A-6	A	TP3	C-6	A			
D104	A-4	B	IC351	F-3	A	Q401	D-1	A	RV109	A-2	A	TP4	B-6	A			
D1	G-1	B	IC352	G-4	A	Q402	D-1	A	RV110	A-2	A	TP5	C-1	A			
[illegible]11	F-1	A	IC451	D-3	A	Q411	E-2	B	RV351	F-2	A	TP6	B-1	A			
D312	F-2	A	IC452	D-4	A	Q451	E-3	B	RV352	G-3	A	TP7	C-4	A			
D13	F-2	B	IC501	G-5	A	Q455	D-4	B	RV353	G-3	A	TP8	C-4	A			
D14	F-2	B	IC601	E-5	A	Q456	E-4	B	RV451	D-2	A	TP9	B-4	A			
D401	D-1	B	IC701	D-6	A	Q457	E-4	B	RV452	D-3	A	TP10	B-4	A			
[illegible]11	E-1	A	IC721	E-6	A	Q458	E-4	B	RV453	D-3	A	TP101	B-2	A			
D12	E-1	A	IC751	E-7	A	Q459	E-4	B	RV501	G-4	A	TP102	C-1	A			
D413	E-2	B	IC752	D-7	A	Q501	F-5	B	RV502	F-5	A	TP103	B-6	A			
D414	D-2	B	IC753	F-6	A	Q502	G-5	B	RV503	F-5	A	TP104	A-6	A			
[illegible]22	E-6	B				Q601	E-5	B	RV601	D-4	A	TP105	B-1	A			
[illegible]51	G-6	B	LV311	F-1	A	Q602	D-5	B	RV602	E-5	A	TP106	B-1	A			
			LV351	G-3	A	Q701	F-6	B	RV603	E-5	A	TP107	A-4	A			
	B-2	A	LV411	E-1	A	Q702	F-6	B				TP108	A-4	A			
[illegible]	C-5	A	LV452	D-3	A	Q703	F-6	B	RY311	F-2	A	TP109	A-4	A			
E3	C-1	A	LV501	G-4	A	Q704	F-6	B	RY351	F-3	A	TP110	A-4	A			
[illegible]01	A-2	A	LC601	D-4	A	Q705	D-6	B	RY411	E-2	A	TP311	F-2	A			
[illegible]01	E-7	A				Q721	F-6	B	RY451	E-3	A	TP312	F-2	A			
			Q1	C-2	B	Q722	F-6	B				TP313	G-2	A			
IC1	C-3	A	Q2	C-4	B	Q723	F-6	B	S1	D-1	A	TP351	F-4	A			

NOTE :

[illegible]: A Side
[illegible]: B Side

A Side

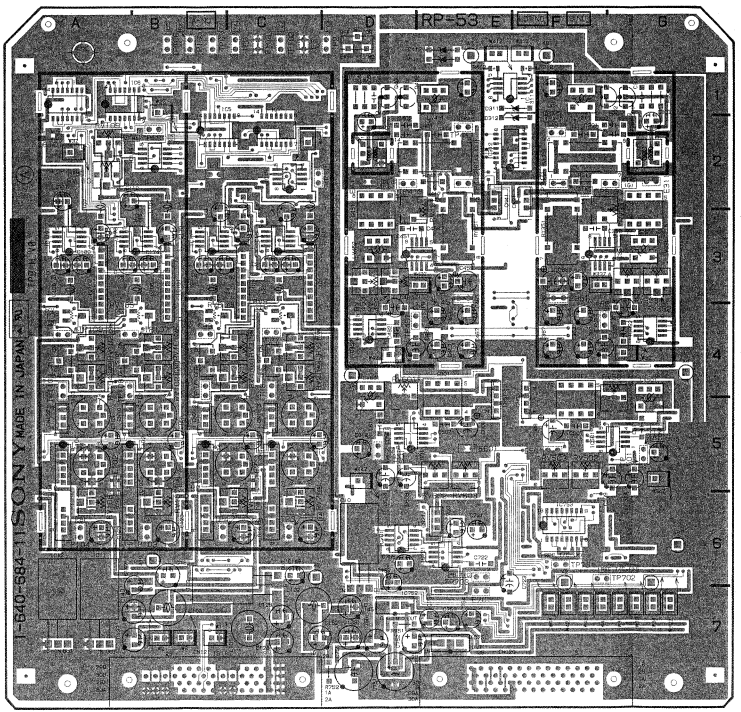

(1-640-684-11) A SIDE

13-4

B Side

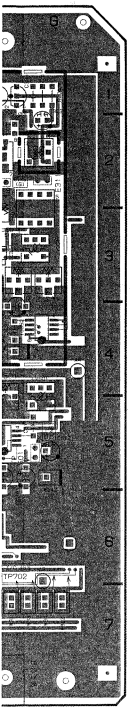

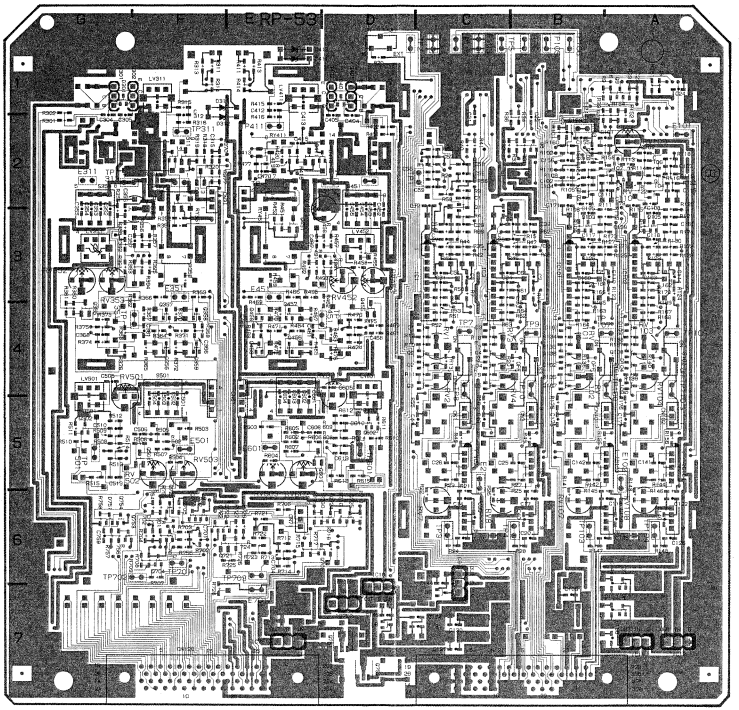

(1-640-684-11) B SIDE

13-4

CP-187, SWC-11 BOARD

CP-187 BOARD (1-640-675-11)

A Side

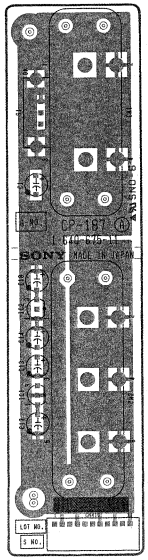

(1-640-675-11) A SIDE

B Side

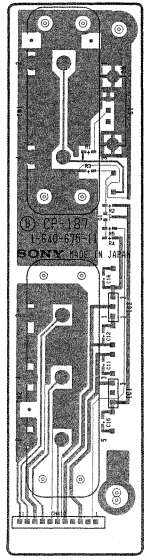

(1-640-675-11) B SIDE

SWC-11 BOARD (1-640-690-11)

A Side

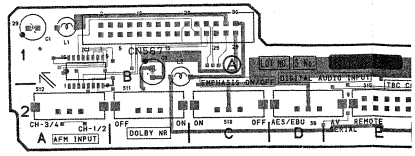

(1-640-690-11) A SIDE

B Side

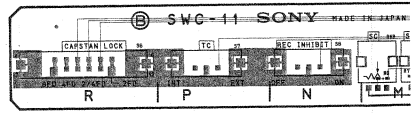

(1-640-690-11) B SIDE

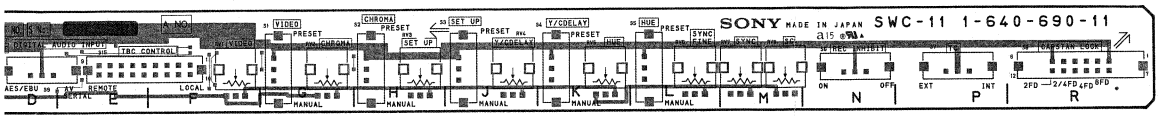

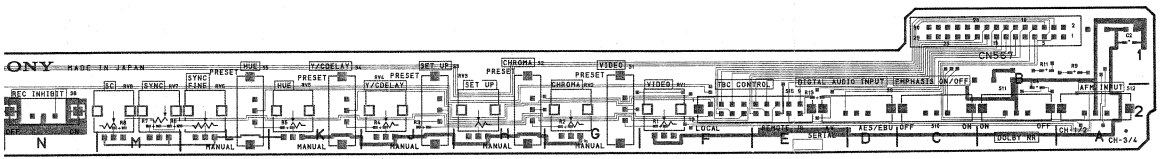

SWC-11 BOARD (1-640-690-11)
BVW-D75PS

CN567	A-1	A
IC1	A-1	A
RV1	F-1	A
RV2	G-1	A
RV3	H-1	A
RV4	J-1	A
RV6	L-1	A
RV7	M-1	A
S1	G-1	A
S2	H-1	A
S3	H-1	A
S4	J-1	A
S6	R-2	A
S7	P-2	A
S8	N-2	A
S9	D-2	A
S10	C-2	A
S11	A-2	A
S12	A-2	A
S15	E-2	A

NOTE :
A : A Side
B : B Side

13-5

TBC-17P BOARD (1-640-685-11)

TBC-17P BOARD (1-640-685-11)
BVW-D75PS

CF701	N-7	A	D700	R-6	B	IC305	B-1	A	IC527	K-6	A	Q202	C-5	A	RV501	K-1	A	TP707	N-5	A
			D701	R-5	B	IC309	D-2	A	IC528	E-5	A	Q300	B-2	B	RV502	L-1	A			
CN136	P-7	A	D702	R-5	B	IC310	D-2	A	IC529	F-7	A	Q301	A-2	B	RV503	L-1	A	X500	K-2	A
CN137	J-7	A	D703	P-6	B	IC311	D-2	A	IC701	P-6	A	Q302	B-2	B	RV504	L-1	A	X501	K-3	A
CN138	E-7	A	D704	P-2	A	IC312	D-1	A	IC702	R-5	A	Q304	C-2	B	RV505	M-1	A	X502	J-3	A
			D705	R-3	B	IC313	B-1	A	IC703	P-5	A	Q400	B-7	B	RV703	P-4	A			
CP700	R-4	A	D706	M-5	B	IC400	A-6	A	IC704	P-6	A	Q401	B-6	B	RV704	M-6	A			
CP701	R-5	A				IC401	A-6	A	IC705	N-7	A	Q402	B-7	B	RV705	N-1	A			
			E100	A-4	A	IC402	A-7	A	IC706	N-7	A	Q403	C-7	B	RV706	P-1	A			
D100	C-3	B	E101	D-4	A	IC403	B-6	A	IC707	N-6	A	Q500	M-1	B	RV707	P-1	A			
D101	D-3	B	E300	B-1	A	IC404	B-5	A	IC709	N-7	A	Q501	M-1	B	RV708	R-1	A			
D200	C-4	B	E500	N-1	A	IC406	C-7	A	IC710	P-7	A	Q502	M-1	B	RV709	R-1	A			
D201	E-4	B	E701	P-5	A	IC407	C-5	A	IC711	P-6	A	Q503	M-1	B	RV710	R-1	A			
D301	C-1	B				IC408	D-6	A	IC712	P-3	A	Q504	N-2	B	RV712	R-1	A			
D302	B-1	B	FL100	B-3	A	IC409	D-6	A	IC713	P-5	A	Q505	N-1	B						
D303	A-3	B	FL200	A-4	A	IC410	B-5	A	IC714	M-6	A	Q506	M-1	B	S1	J-1	A			
D304	A-1	A	FL500	L-2	A	IC411	D-6	A	IC715	P-1	A	Q508	N-2	B						
D305	A-1	A	FL501	M-2	A	IC412	D-7	A	IC716	R-1	A	Q509	N-1	B	TP100	A-3	A			
D306	B-1	B	FL502	N-2	A	IC500	E-4	A	IC717	P-2	A	Q510	N-1	B	TP101	B-3	A			
D307	D-2	B	FL700	K-4	A	IC501	F-2	A	IC718	P-2	A	Q512	L-2	A	TP102	D-4	A			
D401	C-6	B				IC502	F-5	A	IC719	R-2	A	Q513	J-6	B	TP200	A-4	A			
D402	B-6	B	IC1	E-2	A	IC503	E-1	A	IC720	P-2	A	Q703	R-6	B	TP201	B-4	A			
D403	B-6	B	IC2	E-7	A	IC504	G-1	A	IC721	N-5	A	Q704	R-6	B	TP202	D-4	A			
D404	A-7	B	IC3	J-5	A	IC505	E-6	A	IC722	P-3	A	Q705	R-6	A	TP300	C-2	A			
D405	A-5	A	IC13	K-7	A	IC506	G-6	A	IC723	R-3	A	Q706	R-6	B	TP301	A-1	A			
D406	A-5	A	IC100	C-3	A	IC507	G-1	A	IC724	M-4	A	Q716	P-1	B	TP302	D-2	A			
D407	D-7	B	IC101	C-4	A	IC508	G-5	A	IC725	L-4	A	Q717	L-4	B	TP303	A-1	A			
D500	K-2	A	IC102	C-4	A	IC509	G-3	A	IC726	L-6	A	Q718	L-5	B	TP304	C-1	A			
D501	K-2	B	IC103	E-3	A	IC510	G-4	A	IC727	N-4	A				TP305	B-1	A			
D502	K-4	A	IC104	C-4	A	IC511	J-3	A	IC728	P-3	A	RV150	B-4	A	TP306	C-1	A			
D503	J-4	A	IC105	A-4	A	IC512	K-1	A	IC729	R-3	A	RV151	B-4	A	TP400	C-7	A			
D504	K-4	B	IC150	B-4	A	IC513	K-4	A	IC730	K-5	A	RV152	C-4	A	TP401	A-6	A			
D505	M-2	B	IC151	C-4	A	IC514	M-4	A	IC731	P-4	A	RV201	D-4	A	TP402	C-5	A			
D506	N-2	B	IC152	D-4	A	IC515	N-4	A	IC732	L-6	A	RV300	A-2	A	TP403	A-6	A			
D507	P-2	B	IC153	D-4	A	IC516	P-3	A	IC733	N-6	A	RV301	D-3	A	TP404	B-5	A			
D508	J-6	B	IC200	C-4	A	IC517	L-2	A				RV302	D-3	A	TP500	L-1	A			
D509	J-5	B	IC201	C-5	A	IC518	K-5	A	LV300	A-1	A	RV303	C-2	A	TP501	M-1	A			
D510	H-5	B	IC202	D-4	A	IC519	K-6	A	LV400	A-5	A	RV304	C-2	A	TP502	M-1	A			
D511	H-6	B	IC203	E-5	A	IC521	J-6	A				RV400	A-6	A	TP503	J-7	A			
D512	F-6	B	IC300	C-1	A	IC522	K-6	A	Q100	A-3	B	RV401	D-7	A	TP702	N-6	A			
D513	F-3	B	IC301	A-2	A	IC523	J-6	A	Q101	B-3	B	RV402	D-7	A	TP703	N-4	A			
D514	H-3	B	IC302	A-2	A	IC524	J-6	A	Q102	C-3	A	RV403	C-7	A	TP704	P-7	A			
D515	G-3	A	IC303	A-2	A	IC525	J-6	A	Q200	A-5	B	RV404	C-7	A	TP705	M-4	A			
D516	J-6	B	IC304	B-1	A	IC526	G-7	A	Q201	B-5	B	RV500	K-1	A	TP706	G-7	A			

NOTE :

A : A Side

B : B Side

A Side

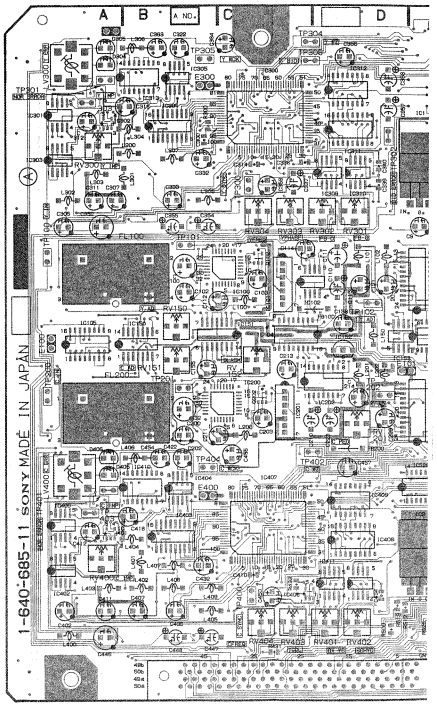

(1-640-685-11) A SIDE

13-6

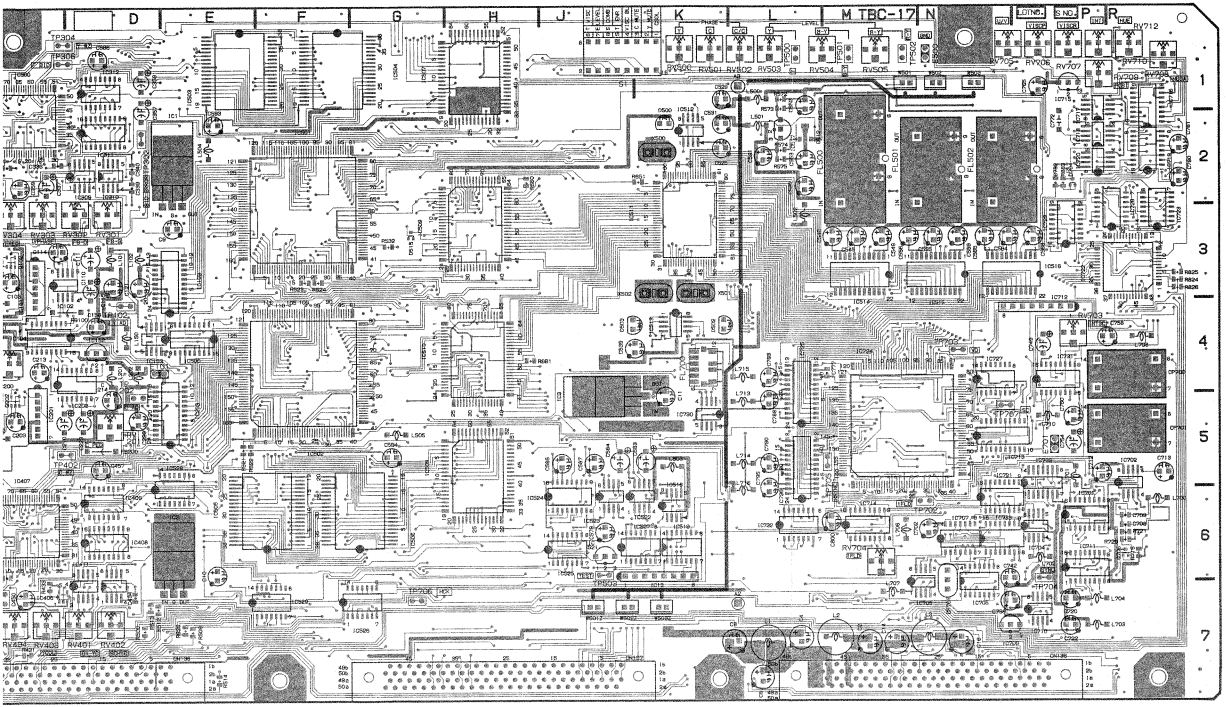

13-6

TBC-17P BOARD (1-640-685-11)

B Side

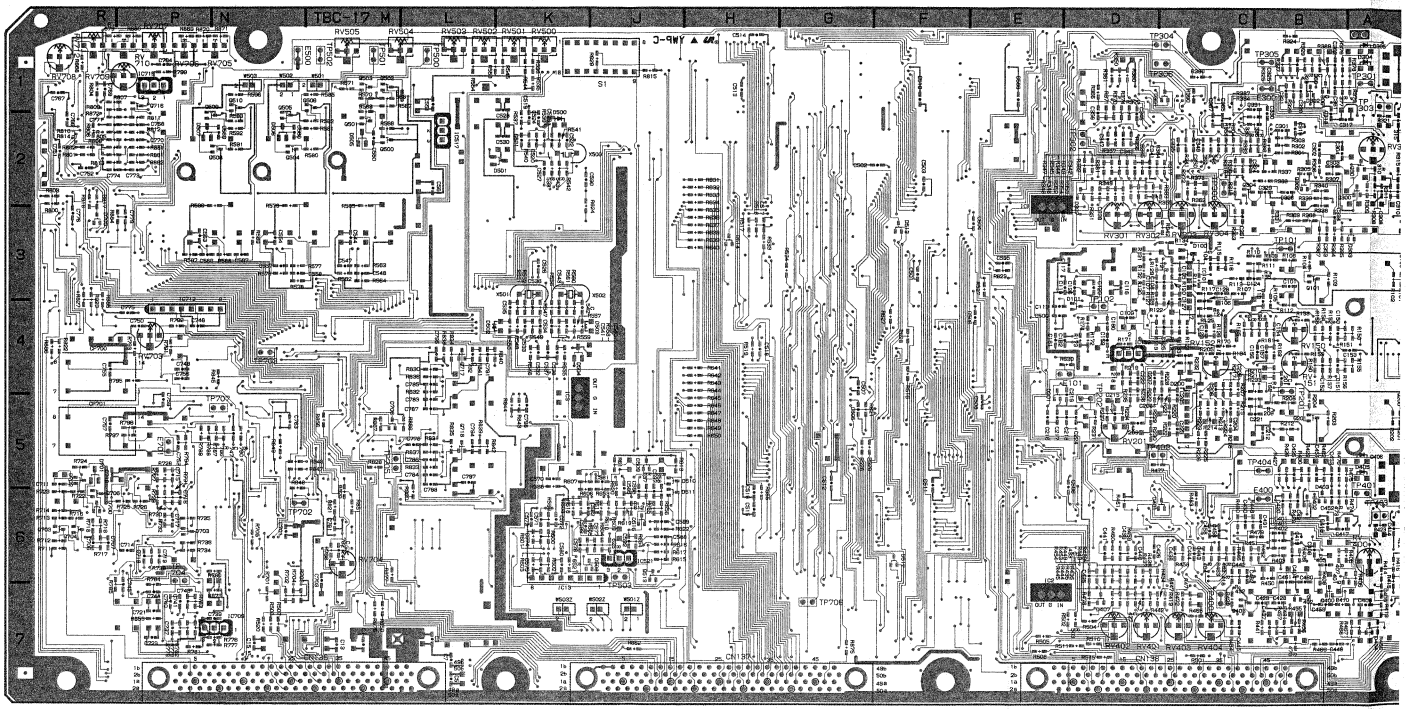

(1-640-685-11) B SIDE

13-7

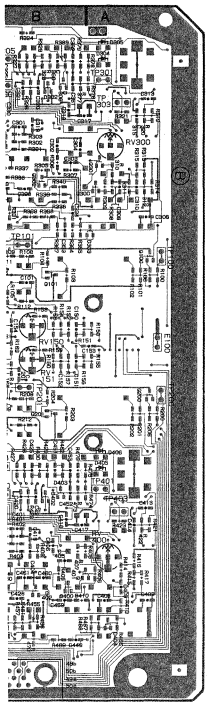

TBC-17P BOARD (1-640-685-11)
BVW-D75PS

CF701	N-7 A	D700	R-6 B	IC305	B-1 A	IC527	K-6 A	Q202	C-5 A	RV501	K-1 A	TP707	N-5 A
		D701	R-5 B	IC309	D-2 A	IC528	E-5 A	Q300	B-2 B	RV502	L-1 A		
CN136	P-7 A	D702	R-5 B	IC310	D-2 A	IC529	F-7 A	Q301	A-2 B	RV503	L-1 A	X500	K-2 A
CN137	J-7 A	D703	P-6 B	IC311	D-2 A	IC701	P-6 A	Q302	B-2 B	RV504	L-1 A	X501	K-3 A
CN138	E-7 A	D704	P-2 A	IC312	D-1 A	IC702	R-5 A	Q304	C-2 B	RV505	M-1 A	X502	J-3 A
		D705	R-3 B	IC313	B-1 A	IC703	P-5 A	Q400	B-7 B	RV703	P-4 A		
CP700	R-4 A	D706	M-5 B	IC400	A-6 A	IC704	P-6 A	Q401	B-6 B	RV704	M-6 A		
CP701	R-5 A			IC401	A-6 A	IC705	N-7 A	Q402	B-7 B	RV705	N-1 A		
		E100	A-4 A	IC402	A-7 A	IC706	N-7 A	Q403	C-7 B	RV706	P-1 A		
D100	C-3 B	E101	D-4 A	IC403	B-6 A	IC707	M-6 A	Q500	M-1 B	RV707	P-1 A		
D101	D-3 B	E300	B-1 A	IC404	B-5 A	IC709	N-7 A	Q501	M-1 B	RV708	R-1 A		
D200	C-4 B	E500	N-1 A	IC406	C-7 A	IC710	P-7 A	Q502	M-1 B	RV709	R-1 A		
D201	E-4 B	E701	P-5 A	IC407	C-5 A	IC711	P-6 A	Q503	M-1 B	RV710	R-1 A		
D301	C-1 B			IC408	D-6 A	IC712	P-3 A	Q504	N-2 B	RV712	R-1 A		
D302	B-1 B	FL100	B-3 A	IC409	D-6 A	IC713	P-5 A	Q505	N-1 B				
D303	A-3 B	FL200	A-4 A	IC410	B-5 A	IC714	M-6 A	Q506	M-1 B	S1	J-1 A		
D304	A-1 A	FL500	L-2 A	IC411	D-6 A	IC715	P-1 A	Q508	N-2 B				
D305	A-1 A	FL501	M-2 A	IC412	D-7 A	IC716	R-1 A	Q509	N-1 B	TP100	A-3 A		
D306	B-1 B	FL502	N-2 A	IC500	E-4 A	IC717	P-2 A	Q510	N-1 B	TP101	B-3 A		
D307	D-2 B	FL700	K-4 A	IC501	F-2 A	IC718	P-2 A	Q512	L-2 A	TP102	D-4 A		
D401	C-6 B			IC502	F-5 A	IC719	R-2 A	Q513	J-6 B	TP200	A-4 A		
D402	B-6 B	IC1	E-2 A	IC503	E-1 A	IC720	P-2 A	Q703	R-6 B	TP201	B-4 A		
D403	B-6 B	IC2	E-7 A	IC504	G-1 A	IC721	N-5 A	Q704	R-6 B	TP202	D-4 A		
D404	A-7 B	IC3	J-5 A	IC505	E-6 A	IC722	P-3 A	Q705	R-6 A	TP300	C-2 A		
D405	A-5 A	IC13	K-7 A	IC506	G-6 A	IC723	R-3 A	Q706	R-6 B	TP301	A-1 A		
D406	A-5 A	IC100	C-3 A	IC507	G-1 A	IC724	M-4 A	Q716	P-1 B	TP302	D-2 A		
D407	D-7 B	IC101	C-4 A	IC508	G-5 A	IC725	L-4 A	Q717	L-4 B	TP303	A-1 A		
D500	K-2 A	IC102	C-4 A	IC509	G-3 A	IC726	L-6 A	Q718	L-5 B	TP304	C-1 A		
D501	K-2 B	IC103	E-3 A	IC510	G-4 A	IC727	N-4 A			TP305	B-1 A		
D502	K-4 A	IC104	C-4 A	IC511	J-3 A	IC728	P-3 A	RV150	B-4 A	TP306	C-1 A		
D503	J-4 A	IC105	A-4 A	IC512	K-1 A	IC729	R-3 A	RV151	B-4 A	TP400	C-7 A		
D504	K-4 B	IC150	B-4 A	IC513	K-4 A	IC730	K-5 A	RV152	C-4 A	TP401	A-6 A		
D505	M-2 B	IC151	C-4 A	IC514	M-4 A	IC731	P-4 A	RV201	D-4 A	TP402	C-5 A		
D506	N-2 B	IC152	D-4 A	IC515	N-4 A	IC732	L-6 A	RV300	A-2 A	TP403	A-6 A		
D507	P-2 B	IC153	D-4 A	IC516	P-3 A	IC733	N-6 A	RV301	D-3 A	TP404	B-5 A		
D508	J-6 B	IC200	C-4 A	IC517	L-2 A			RV302	D-3 A	TP500	L-1 A		
D509	J-5 B	IC201	C-5 A	IC518	K-5 A	LV300	A-1 A	RV303	C-2 A	TP501	M-1 A		
D510	H-5 B	IC202	D-4 A	IC519	K-6 A	LV400	A-5 A	RV304	C-2 A	TP502	M-1 A		
D511	H-6 B	IC203	E-5 A	IC521	J-6 A			RV400	A-6 A	TP503	J-7 A		
D512	F-6 B	IC300	C-1 A	IC522	K-6 A	Q100	A-3 B	RV401	D-7 A	TP702	N-6 A		
D513	F-3 B	IC301	A-2 A	IC523	J-6 A	Q101	B-3 B	RV402	D-7 A	TP703	N-4 A		
D514	H-3 B	IC302	A-2 A	IC524	J-6 A	Q102	C-3 A	RV403	C-7 A	TP704	P-7 A		
D515	G-3 A	IC303	A-2 A	IC525	J-6 A	Q200	A-5 B	RV404	C-7 A	TP705	M-4 A		
D516	J-6 B	IC304	B-1 A	IC526	G-7 A	Q201	B-5 B	RV500	K-1 A	TP706	G-7 A		

NOTE :

A : A Side

B : B Side

13-7

DIF-11P BOARD (1-640-686-11)

DIF-11P BOARD (1-640-686-11)
BVW-D75PS

CN31	L-5 A	FL1	H-5 A	IC136	E-6 A	IC434	M-4 A	Q1	G-5 A	Q603	P-1 B	RY400	P-6 A		
CN32	L-3 A	FL100	D-5 A	IC137	C-7 A	IC435	M-4 A	Q2	G-7 B	Q604	L-3 B	RY401	N-6 A		
CN101	D-1 A	FL101	D-7 A	IC139	E-7 A	IC436	M-5 A	Q3	G-6 A	Q605	L-1 B	RY402	M-6 A		
CN103	C-2 A	FL102	F-4 A	IC140	E-7 A	IC438	M-4 A	Q4	G-6 B	Q606	M-2 B	RY403	L-6 A		
CN104	D-1 A	FL103	D-4 A	IC141	D-4 A	IC439	L-4 A	Q5	G-6 B	Q607	L-1 B	RY600	R-1 A		
CN133	M-7 A	FL104	D-4 A	IC142	C-4 A	IC440	K-2 A	Q6	G-6 B	Q608	L-1 B	RY601	N-1 A		
CN134	H-7 A			IC143	D-5 A	IC441	J-3 A	Q7	H-5 B	Q609	M-1 B	RY602	L-1 A		
CN135	D-7 A	IC1	G-6 A	IC144	C-4 A	IC600	P-1 A	Q102	E-1 B	Q800	F-3 B	RY603	N-1 A		
CN800	F-1 A	IC2	G-5 A	IC147	B-6 A	IC601	P-2 A	Q103	E-1 B	Q801	E-3 B				
CN801	F-1 A	IC3	G-7 A	IC148	E-6 A	IC603	R-3 A	Q104	D-4 B	Q802	F-2 B	S102	C-1 A		
CN802	G-1 A	IC4	G-5 A	IC149	E-7 A	IC604	R-1 A	Q105	D-3 A	Q803	F-2 B	S800	H-1 A		
CN803	G-1 A	IC5	H-5 A	IC150	E-4 A	IC605	R-2 A	Q106	D-5 B			S801	J-1 A		
		IC6	H-5 A	IC151	C-2 A	IC606	N-3 A	Q107	D-5 B	RV2	K-7 A				
D101	D-3 A	IC8	H-5 A	IC400	K-5 A	IC607	P-3 A	Q108	E-5 B	RV102	C-3 A	TP100	E-5 A		
D102	A-1 A	IC9	H-5 A	IC401	K-3 A	IC608	J-1 A	Q109	E-6 B	RV103	C-6 A	TP101	E-7 A		
D104	A-1 A	IC10	H-6 A	IC402	R-5 A	IC609	K-1 A	Q110	D-7 B	RV104	D-6 A	TP105	D-3 A		
D105	A-1 A	IC11	H-6 A	IC403	R-6 A	IC610	M-1 A	Q111	D-7 B	RV106	F-5 A	TP106	D-2 A		
D106	A-1 A	IC12	H-6 A	IC404	R-6 A	IC611	M-2 A	Q112	E-7 B	RV107	E-5 A	TP400	K-3 A		
D107	B-1 A	IC13	H-6 A	IC405	R-4 A	IC613	N-3 A	Q113	E-7 B	RV108	C-6 A	TP401	L-3 A		
D108	B-1 A	IC14	H-6 A	IC406	R-4 A	IC614	M-1 A	Q114	E-4 B	RV109	D-6 A	TP402	K-3 A		
D109	B-1 A	IC15	H-6 A	IC407	R-5 A	IC615	N-2 A	Q115	F-4 B	RV110	F-6 A	TP403	P-4 A		
D110	B-1 A	IC102	A-6 A	IC409	R-4 A	IC616	L-3 A	Q116	D-4 A	RV111	E-6 A	TP404	N-4 A		
D111	C-1 A	IC104	D-2 A	IC410	P-4 A	IC617	M-3 A	Q117	E-4 B	RV112	C-5 A	TP405	R-7 A		
D400	P-6 B	IC105	D-3 A	IC411	P-5 A	IC619	K-1 A	Q118	D-5 A	RV113	C-5 A	TP406	P-7 A		
D401	N-6 B	IC106	A-2 A	IC412	P-6 A	IC620	K-2 A	Q119	E-5 B	RV114	C-5 A	TP407	K-4 A		
D402	M-6 B	IC107	A-2 A	IC413	P-6 A	IC622	K-2 A	Q121	A-1 B	RV115	C-5 A	TP408	L-4 A		
D403	L-3 B	IC108	B-2 A	IC414	P-4 A	IC623	K-2 A	Q122	C-2 A	RV400	R-7 A	TP409	K-4 A		
D600	N-1 B	IC110	A-2 A	IC415	P-4 A	IC624	J-1 A	Q123	C-2 A	RV401	R-5 A	TP410	M-4 A		
D601	R-1 B	IC111	A-2 A	IC416	P-5 A	IC627	K-2 A	Q124	D-2 A	RV402	P-7 A	TP411	L-4 A		
D602	P-2 B	IC113	B-1 A	IC418	P-4 A	IC800	H-2 A	Q400	P-5 A	RV403	P-5 A	TP412	N-7 A		
D603	P-2 B	IC118	B-1 A	IC419	N-4 A	IC801	F-3 A	Q401	R-7 B	RV404	N-7 A	TP413	M-7 A		
D604	P-2 B	IC120	B-2 A	IC420	K-5 A	IC802	F-2 A	Q402	P-7 B	RV405	N-5 A	TP600	P-1 A		
D605	P-2 B	IC121	B-3 A	IC421	K-4 A	IC804	H-1 A	Q403	N-5 A	RV406	M-7 A	TP601	R-1 A		
D606	L-1 B	IC123	A-5 A	IC422	N-5 A	IC805	J-2 A	Q404	P-7 B	RV407	M-5 A	TP602	R-3 A		
D607	N-1 B	IC124	A-5 A	IC423	N-6 A	IC806	J-2 A	Q405	N-7 B	RV600	P-1 A	TP603	M-1 A		
D608	M-2 B	IC125	B-5 A	IC424	N-6 A	IC807	G-4 A	Q406	M-5 A	RV601	N-2 A	TP604	N-1 A		
D609	M-2 B	IC126	B-5 A	IC425	N-4 A	IC808	H-4 A	Q407	N-7 B	RV602	R-1 A	TP605	N-3 A		
D610	M-2 B	IC127	A-5 A	IC426	N-4 A	IC809	G-2 A	Q408	M-7 B	RV603	R-2 A	TP606	K-2 A		
D611	M-2 B	IC128	A-5 A	IC427	N-5 A	IC810	G-3 A	Q409	L-5 A	RV604	L-1 A	TP607	P-1 A		
D612	K-2 B	IC129	A-6 A	IC429	N-4 A	IC811	G-3 A	Q410	M-7 B	RV605	M-2 A	TP608	R-2 A		
D800	E-1 A	IC131	C-2 A	IC430	M-4 A	IC812	J-4 A	Q411	L-7 B	RV606	M-1 A	TP609	M-1 A		
D801	F-3 A	IC132	A-7 A	IC431	M-5 A	IC813	H-1 A	Q600	P-2 B	RV607	N-2 A	TP610	M-2 A		
		IC133	C-5 A	IC432	M-6 A	IC900	K-7 A	Q601	P-1 B	RV801	E-3 A	TP800	E-3 A		
E1	H-7 A	IC135	E-5 A	IC433	M-6 A	IC902	F-6 A	Q602	R-2 B			TP801	E-3 A		

NOTE :

A : A Side

B : B Side

A Side

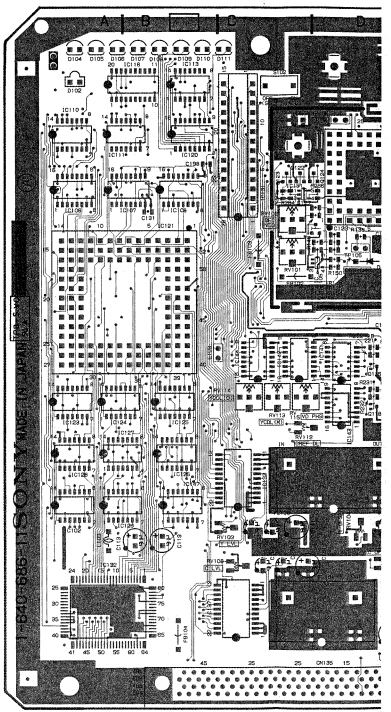

(1-640-686-11) A SIDE

13-8

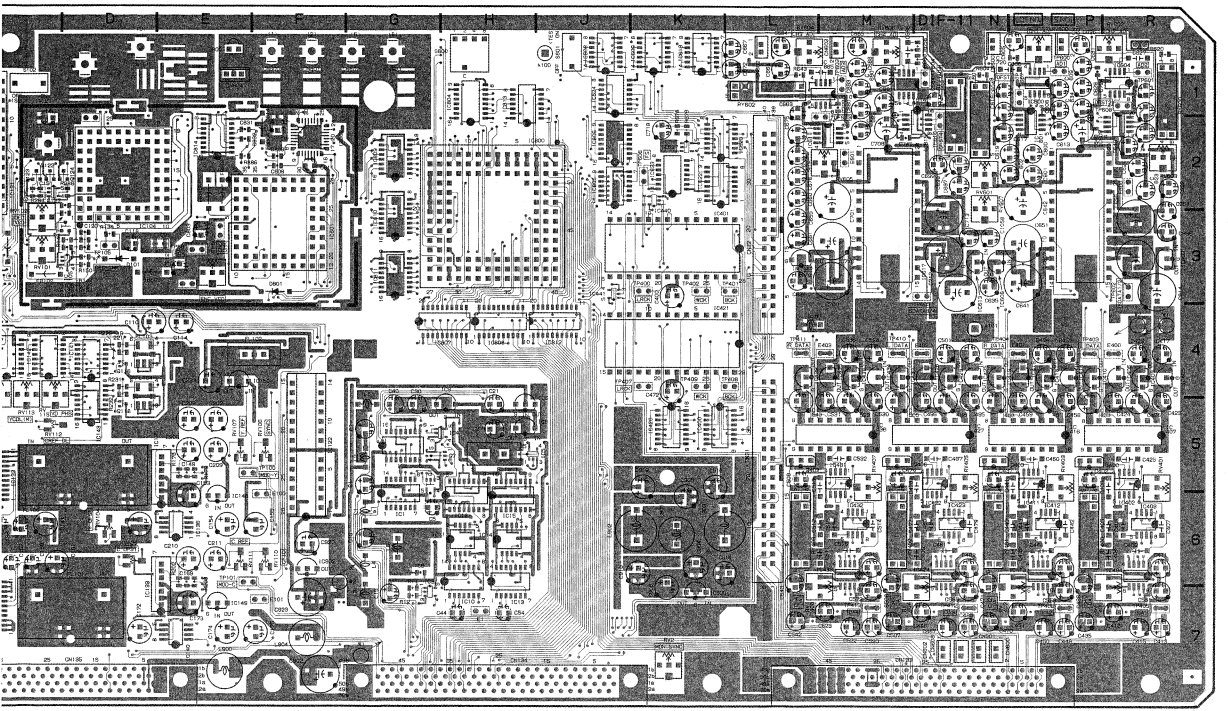

13-8

DIF-11P BOARD (1-640-686-11)

B Side

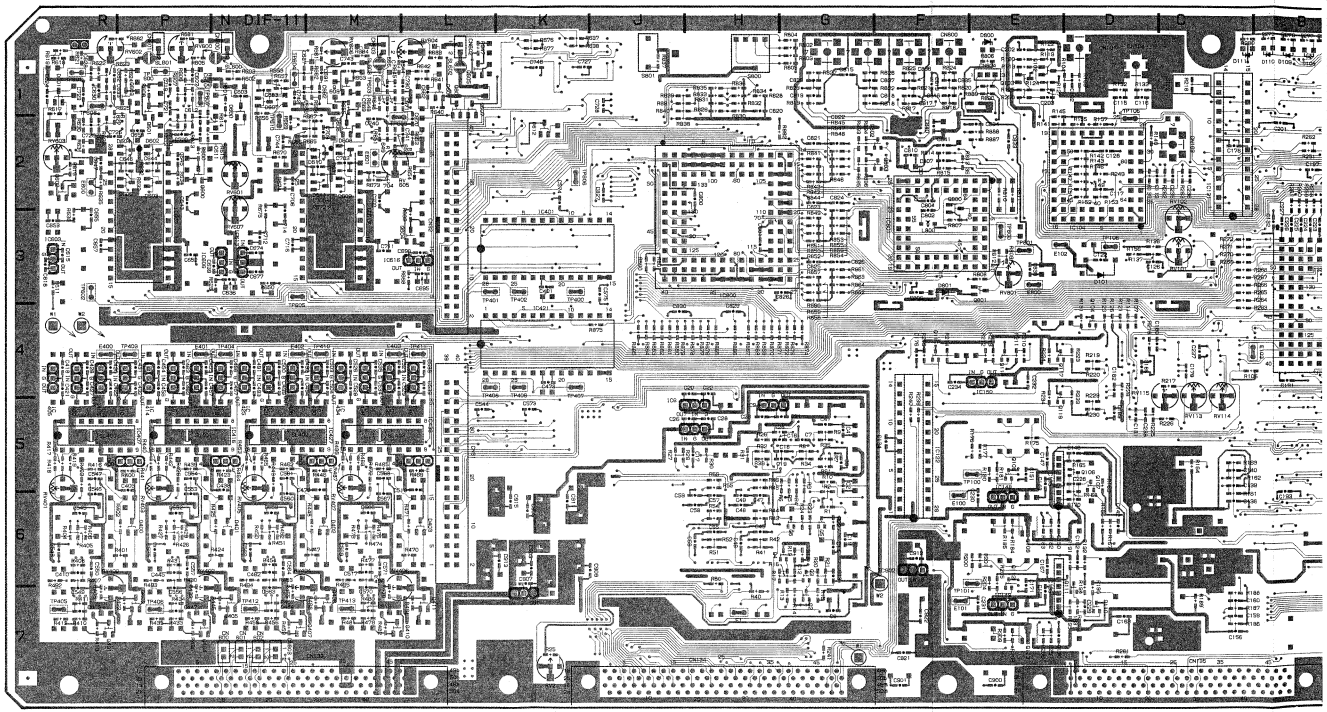

(1-640-686-11) B SIDE

13-9

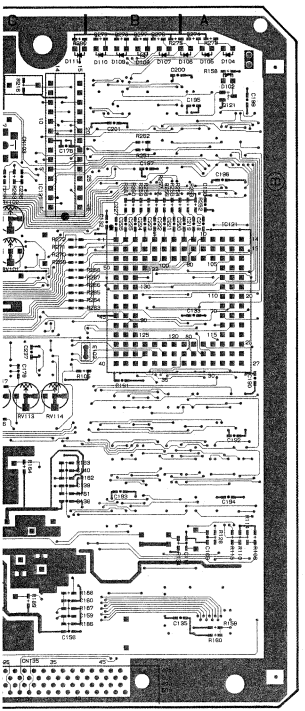

DIF-11P BOARD (1-640-686-11)
BVW-D75PS

CN31	L-5 A	FL1	H-5 A	IC136	E-6 A	IC434	M-4 A	Q1	G-5 A	Q603	P-1 B	RY400	P-6 A
CN32	L-3 A	FL100	D-5 A	IC137	C-7 A	IC435	M-4 A	Q2	G-7 B	Q604	L-3 B	RY401	N-6 A
CN101	D-1 A	FL101	D-7 A	IC139	E-7 A	IC436	M-5 A	Q3	G-6 A	Q605	L-1 B	RY402	M-6 A
CN103	C-2 A	FL102	F-4 A	IC140	E-7 A	IC438	M-4 A	Q4	G-6 B	Q606	M-2 B	RY403	L-6 A
CN104	D-1 A	FL103	D-4 A	IC141	D-4 A	IC439	L-4 A	Q5	G-6 B	Q607	L-1 B	RY600	R-1 A
CN133	M-7 A	FL104	D-4 A	IC142	C-4 A	IC440	K-2 A	Q6	G-6 B	Q608	L-1 B	RY601	N-1 A
CN134	H-7 A			IC143	D-5 A	IC441	J-3 A	Q7	H-5 B	Q609	M-1 B	RY602	L-1 A
CN135	D-7 A	IC1	G-6 A	IC144	C-4 A	IC600	P-1 A	Q102	E-1 B	Q800	F-3 B	RY603	N-1 A
CN800	F-1 A	IC2	G-5 A	IC147	B-6 A	IC601	P-2 A	Q103	E-1 B	Q801	E-3 B		
CN801	F-1 A	IC3	G-7 A	IC148	E-6 A	IC603	R-3 A	Q104	D-4 B	Q802	F-2 B	S102	C-1 A
CN802	G-1 A	IC4	G-5 A	IC149	E-7 A	IC604	R-1 A	Q105	D-3 A	Q803	F-2 B	S800	H-1 A
CN803	G-1 A	IC5	H-5 A	IC150	E-4 A	IC605	R-2 A	Q106	D-5 B			S801	J-1 A
		IC6	H-5 A	IC151	C-2 A	IC606	N-3 A	Q107	D-5 B	RV2	K-7 A		
D101	D-3 A	IC8	H-5 A	IC400	K-5 A	IC607	P-3 A	Q108	E-5 B	RV102	C-3 A	TP100	E-5 A
D102	A-1 A	IC9	H-5 A	IC401	K-3 A	IC608	J-1 A	Q109	E-6 B	RV103	C-6 A	TP101	E-7 A
D104	A-1 A	IC10	H-6 A	IC402	R-5 A	IC609	K-1 A	Q110	D-7 B	RV104	D-6 A	TP105	D-3 A
D105	A-1 A	IC11	H-6 A	IC403	R-6 A	IC610	M-1 A	Q111	D-7 B	RV106	F-5 A	TP106	D-2 A
D106	A-1 A	IC12	H-6 A	IC404	R-6 A	IC611	M-2 A	Q112	E-7 B	RV107	E-5 A	TP400	K-3 A
D107	B-1 A	IC13	H-6 A	IC405	R-4 A	IC613	N-3 A	Q113	E-7 B	RV108	C-6 A	TP401	L-3 A
D108	B-1 A	IC14	H-6 A	IC406	R-4 A	IC614	M-1 A	Q114	E-4 B	RV109	D-6 A	TP402	K-3 A
D109	B-1 A	IC15	H-6 A	IC407	R-5 A	IC615	N-2 A	Q115	F-4 B	RV110	F-6 A	TP403	P-4 A
D110	B-1 A	IC102	A-6 A	IC409	R-4 A	IC616	L-3 A	Q116	D-4 A	RV111	E-6 A	TP404	N-4 A
D111	C-1 A	IC104	D-2 A	IC410	P-4 A	IC617	M-3 A	Q117	E-4 B	RV112	C-5 A	TP405	R-7 A
D400	P-6 B	IC105	D-3 A	IC411	P-5 A	IC619	K-1 A	Q118	D-5 A	RV113	C-5 A	TP406	P-7 A
D401	N-6 B	IC106	A-2 A	IC412	P-6 A	IC620	K-2 A	Q119	E-5 B	RV114	C-5 A	TP407	K-4 A
D402	M-6 B	IC107	A-2 A	IC413	P-6 A	IC622	K-2 A	Q121	A-1 B	RV115	C-5 A	TP408	L-4 A
D403	L-3 B	IC108	B-2 A	IC414	P-4 A	IC623	K-2 A	Q122	C-2 A	RV400	R-7 A	TP409	K-4 A
D600	N-1 B	IC110	A-2 A	IC415	P-4 A	IC624	J-1 A	Q123	C-2 A	RV401	R-5 A	TP410	M-4 A
D601	R-1 B	IC111	A-2 A	IC416	P-5 A	IC627	K-2 A	Q124	D-2 A	RV402	P-7 A	TP411	L-4 A
D602	P-2 B	IC113	B-1 A	IC418	P-4 A	IC800	H-2 A	Q400	P-5 A	RV403	P-5 A	TP412	M-7 A
D603	P-2 B	IC118	B-1 A	IC419	N-4 A	IC801	F-3 A	Q401	R-7 B	RV404	N-7 A	TP413	M-7 A
D604	P-2 B	IC120	B-2 A	IC420	K-5 A	IC802	F-2 A	Q402	P-7 B	RV405	N-5 A	TP600	P-1 A
D605	P-2 B	IC121	B-3 A	IC421	K-4 A	IC804	H-1 A	Q403	N-5 A	RV406	M-7 A	TP601	R-1 A
D606	L-1 B	IC123	A-5 A	IC422	N-5 A	IC805	J-2 A	Q404	P-7 B	RV407	M-5 A	TP602	R-3 A
D607	N-1 B	IC124	A-5 A	IC423	M-6 A	IC806	J-2 A	Q405	N-7 B	RV600	P-1 A	TP603	M-1 A
D608	M-2 B	IC125	B-5 A	IC424	N-6 A	IC807	G-4 A	Q406	M-5 A	RV601	N-2 A	TP604	N-1 A
D609	M-2 B	IC126	B-5 A	IC425	N-4 A	IC808	H-4 A	Q407	N-7 B	RV602	R-1 A	TP605	N-3 A
D610	M-2 B	IC127	A-5 A	IC426	N-4 A	IC809	G-2 A	Q408	M-7 B	RV603	R-2 A	TP606	K-2 A
D611	M-2 B	IC128	A-5 A	IC427	N-5 A	IC810	G-3 A	Q409	L-5 A	RV604	L-1 A	TP607	P-1 A
D612	K-2 B	IC129	A-6 A	IC429	N-4 A	IC811	G-3 A	Q410	M-7 B	RV605	M-2 A	TP608	R-2 A
D800	E-1 A	IC131	C-2 A	IC430	M-4 A	IC812	J-4 A	Q411	L-7 B	RV606	M-1 A	TP609	M-1 A
D801	F-3 A	IC132	A-7 A	IC431	M-5 A	IC813	H-1 A	Q600	P-2 B	RV607	N-2 A	TP610	M-2 A
		IC133	C-5 A	IC432	M-6 A	IC900	K-7 A	Q601	P-1 B	RV801	E-3 A	TP800	E-3 A
E1	H-7 A	IC135	E-5 A	IC433	M-6 A	IC902	F-6 A	Q602	R-2 B			TP801	E-3 A

NOTE :
A : A Side
B : B Side

13-9

SIF-17, DUS-359/490 BOARD

SIF-17 BOARD (1-640-687-11)

SIF-17 BOARD (1-640-687-11)
BVW-D75PS

CN301 E-5 A
CN302 E-2 A

D301 A-3 A
D302 B-3 A
D303 B-3 A
D304 B-4 A
D305 A-4 A
D306 B-4 A
D307 B-4 A
D308 B-4 A
D309 B-5 B
D310 D-5 B

IC29 B-5 A
IC30 C-5 B
IC31 D-6 A
IC32 D-5 B
IC300 C-5 A
IC301 D-6 A
IC302 E-3 B
IC303 D-4 B
IC304 D-2 A
IC305 B-3 A
IC306 C-3 B
IC307 C-3 B
IC309 A-6 A
IC310 A-4 A
IC311 A-4 A
IC312 B-5 A
IC313 C-1 A
IC314 C-1 A
IC315 C-2 A
IC316 B-2 A
IC319 D-1 B
IC320 B-1 A
IC321 E-4 B
IC323 E-4 A
IC324 C-2 A
IC327 C-4 A
IC328 D-4 A

X301 A-6 A
X302 B-1 A

NOTE :
A : A Side
B : B Side

A Side

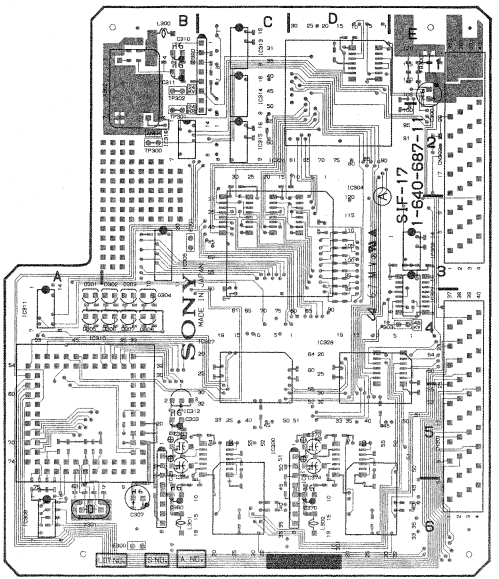

(1-640-687-11) A SIDE

B Side

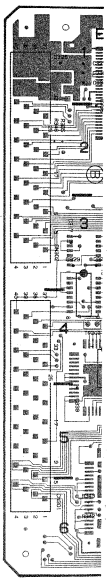

(1-640-687-

13-10

SIF-17, DUS-359/490 BOARD

B Side

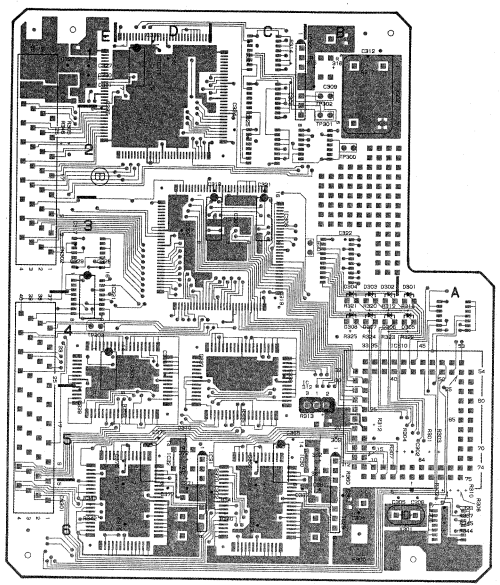

(1-640-687-11) B SIDE

DUS-359 BOARD (0-227-490-01)

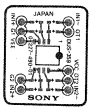

(0-227-490-01) A SIDE

DUS-490 BOARD (1-641-899-11)

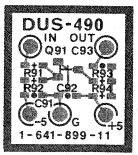

(1-641-899-11) A SIDE

CP-175 BOARD (1-640-672-11)

A Side

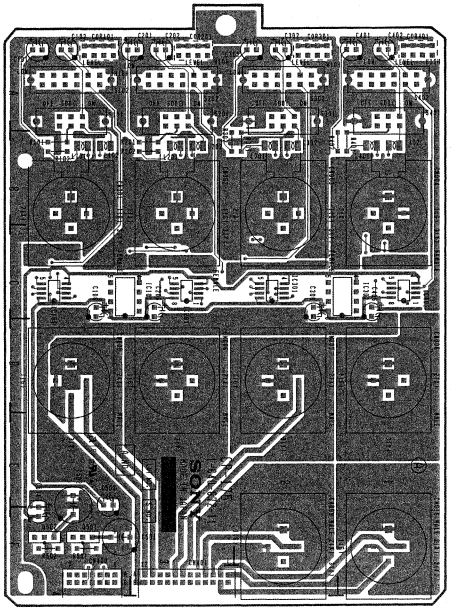

(1-640-672-11) A SIDE

B Side

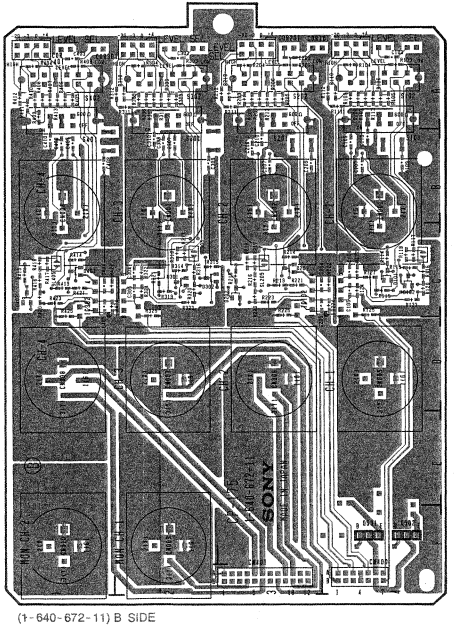

(1-640-672-11) B SIDE

CP-175 BOARD (1-640-672-11)
BVW-D75PS

CN1	B-4	A	S402	A-1	A
CN2	B-3	A			
CN3	B-2	A			
CN4	B-1	A			
CN5	D-4	A			
CN6	D-3	A			
CN7	D-2	A			
CN8	D-1	A			
CN9	F-2	A			
CN10	F-1	A			
CN400	F-4	A			
CN401	F-3	A			
COR101	A-4	B			
COR201	A-3	B			
COR301	A-2	B			
COR401	A-1	B			
D101	C-4	B			
D102	C-4	B			
D201	C-3	B			
D202	C-3	B			
D301	C-2	B			
D302	C-2	B			
D401	C-1	B			
D402	C-1	B			
IC101	C-4	A			
IC102	C-3	A			
IC201	C-3	A			
IC301	C-2	A			
IC302	C-1	A			
IC401	C-1	A			
Q501	F-4	A			
Q502	F-4	A			
S101	A-4	A			
S102	A-4	A			
S201	A-3	A			
S202	A-3	A			
S301	A-2	A			
S302	A-2	A			
S401	A-1	A			

NOTE :
A : A Side
B : B Side

13-11

CP-185 BOARD (1-640-673-11)

A Side

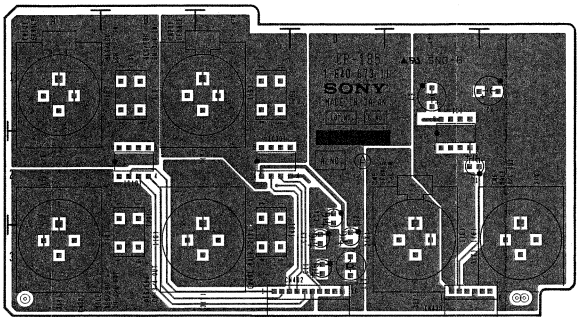

(1-640-673-11) A SIDE

B Side

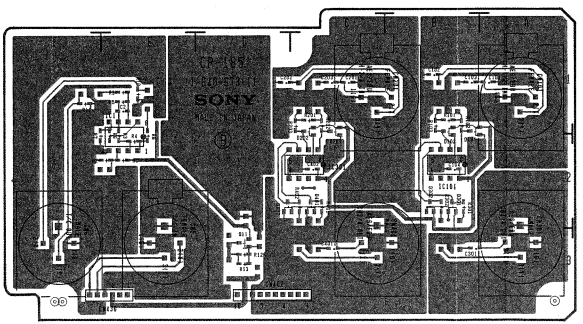

(1-640-673-11) B SIDE

CP-185 BOARD (1-640-673-11)
BVW-D75PS

CN5	D-2	A
CN6	F-2	A
CN101	A-1	A
CN201	B-1	A
CN301	A-3	A
CN401	C-3	A
CN402	D-3	A
CN430	E-3	A
D101		
D102		
D201	C-2	B
D202	C-2	B
D301	B-2	B
D302	B-2	B
D401	C-2	B
D402	D-2	B
IC1	E-1	A
IC101	B-2	A
IC301	C-2	A
Q11	D-3	B
RV1	B-5	A
RV2	B-4	A
T101	B-1	A
T201	C-1	A
T301	B-2	A
T401	C-3	A

NOTE :
A : A Side
B : B Side

AFM-8 BOARD (1-640-683-11)

AFM-8 BOARD (1-640-683-11)
BVW-D75PS

CN1	F1	A	IC6	E-4	A	Q5	B-5	B	Q607	C-3	A	TP104	E-4	A
CN118	F-7	A	IC7	E-4	A	Q6	B-4	B	Q608	C-2	A	TP201	F-1	A
CN119	B-7	A	IC8	D-4	A	Q10	E-4	B	Q702	E-6	B	TP202	F-2	A
			IC101	E-1	A	Q11	E-4	B	Q703	D-6	B	TP203	G-4	A
D1	D-4	B	IC102	E-2	A	Q12	E-5	B	Q704	A-4	B	TP204	F-4	A
D101	D-1	B	IC103	D-3	A	Q13	B-5	B	Q705	B-4	B	TP301	F-7	A
D102	D-2	B	IC104	F-3	A	Q14	B-5	B	Q801	B-7	A	TP302	F-7	A
D103	F-3	B	IC105	E-4	A	Q15	D-2	A	Q802	B-7	A	TP303	F-5	A
D104	F-3	B	IC106	E-3	A	Q16	B-5	B				TP401	F-5	A
D105	F-4	B	IC201	G-1	A	Q17	B-4	B	RV1	B-5	A	TP501	F-7	A
D106	F-3	B	IC202	G-2	A	Q19	F-6	B	RV2	B-4	A	TP502	G-7	A
D201	F-1	B	IC203	G-3	A	Q20	C-4	B	RV101	F-1	A	TP503	G-5	A
D202	F-2	B	IC301	G-7	A	Q101	D-2	B	RV102	F-2	A	TP601	A-1	A
D203	G-3	B	IC302	F-6	A	Q102	G-3	B	RV103	D-2	A	TP602	B-1	A
D204	G-3	B	IC303	F-6	A	Q103	F-3	B	RV104	E-3	A	TP701	B-1	A
D301	F-6	B	IC401	F-4	A	Q104	F-3	A	RV105	E-3	A	TP702	E-1	A
D304	F-6	B	IC502	G-6	A	Q105	F-3	A	RV107	E-4	A	TP801	C-1	A
D305	F-6	B	IC503	G-6	A	Q201	F-2	B	RV201	G-1	A	TP802	C-1	A
D501	G-5	B	IC601	B-1	A	Q202	G-3	B	RV202	G-2	A	TP803	C-1	A
D504	G-6	B	IC701	E-5	A	Q203	G-3	B	RV203	F-2	A	TP804	C-5	A
D505	G-6	B	IC702	D-5	A	Q204	G-3	A	RV204	G-3	A	TP901	D-1	A
			IC703	D-6	A	Q301	F-6	B	RV205	F-3	A	TP902	D-1	A
E1	A-5	A	IC704	E-6	A	Q305	G-6	B	RV301	F-6	A	TP903	D-1	A
E101	D-1	A	IC705	D-5	A	Q306	F-7	B	RV302	F-6	A	TP904	B-6	A
E201	G-1	A	IC706	E-5	A	Q307	F-6	B	RV501	G-6	A			
E301	F-6	A	IC707	E-7	A	Q308	F-6	B	RV502	G-6	A			
E401	F-4	A	IC708	D-5	A	Q309	F-5	B	RV601	A-1	A			
E501	G-6	A	IC712	D-6	A	Q401	F-4	B	RV602	B-1	A			
E801	C-1	A	IC720	C-7	A	Q402	D-5	B						
E901	D-1	A	IC721	C-6	A	Q403	F-5	B	S1	G-1	A			
			IC722	C-6	A	Q404	E-5	B						
FL1	A-5	A	IC723	C-7	A	Q405	D-5	B	T601	A-3	A			
FL2	A-4	A	IC801	B-6	A	Q501	G-6	B	T602	B-3	A			
FL3	C-4	A	IC802	B-6	A	Q505	G-6	B						
FL4	D-2	A	IC803	B-5	A	Q506	G-6	B	TP1	B-5	A			
FL5	D-1	A	IC901	A-6	A	Q507	G-6	B	TP2	B-5	A			
FL6	D-1	A	IC902	A-6	A	Q508	F-6	B	TP3	C-3	A			
FL7	D-2	A	IC903	A-5	A	Q509	G-5	B	TP4	C-3	A			
FL101	G-3	A				Q601	A-2	A	TP6	C-3	A			
			LV601	A-3	A	Q602	A-2	A	TP7	E-4	A			
IC1	D-3	A	LV602	B-3	A	Q603	A-3	A	TP8	E-4	A			
IC2	C-4	A				Q604	A-2	A	TP101	E-1	A			
IC3	D-3	A	Q1	A-5	B	Q605	B-2	A	TP102	E-2	A			
IC4	D-3	A	Q2	A-5	B	Q606	B-2	A	TP103	F-4	A			

NOTE :

A : A Side

B : B Side

A Side

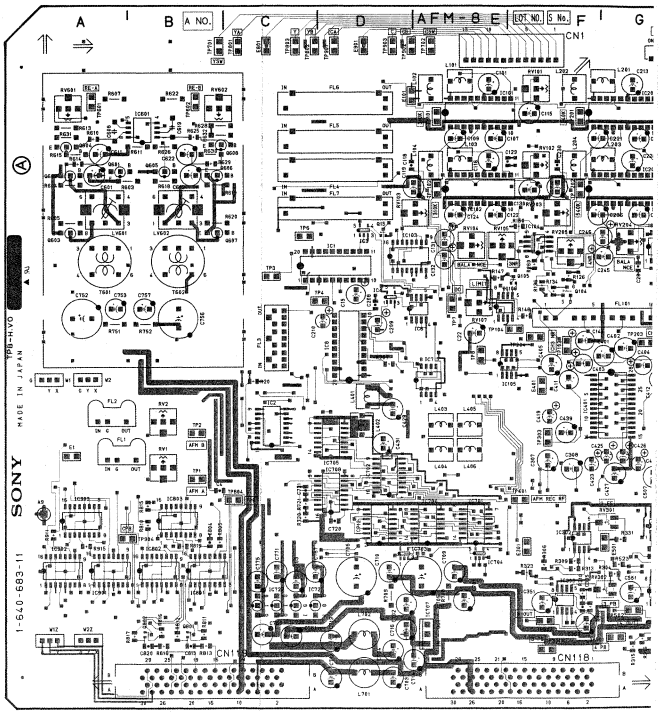

(1-640-683-11) A SIDE

13-12

B Side

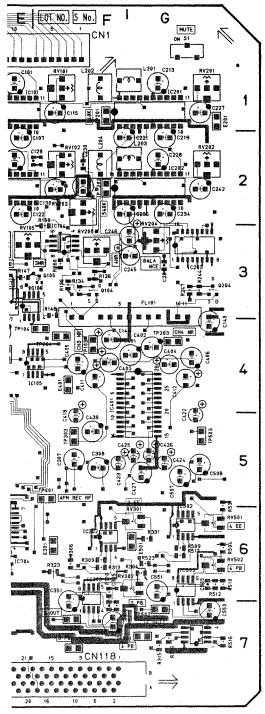

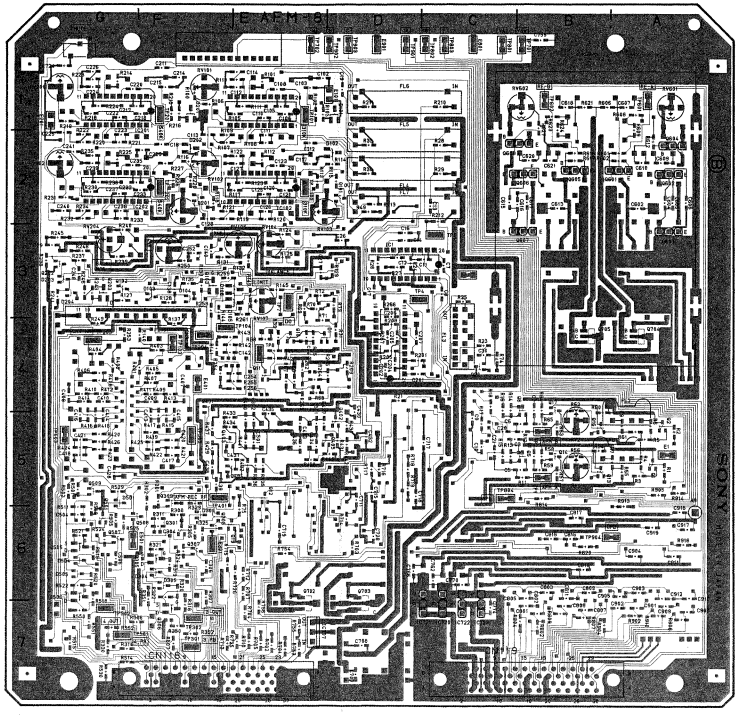

(1-640-683-11) B SIDE

13-12

AU-145 BOARD (1-640-679-11)

A Side

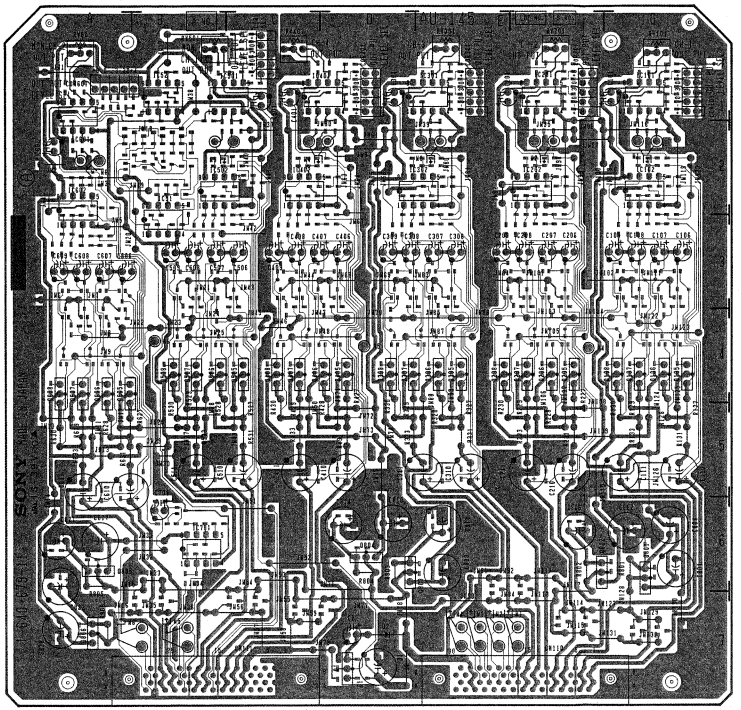

(1-640-679-11) A SIDE

B Side

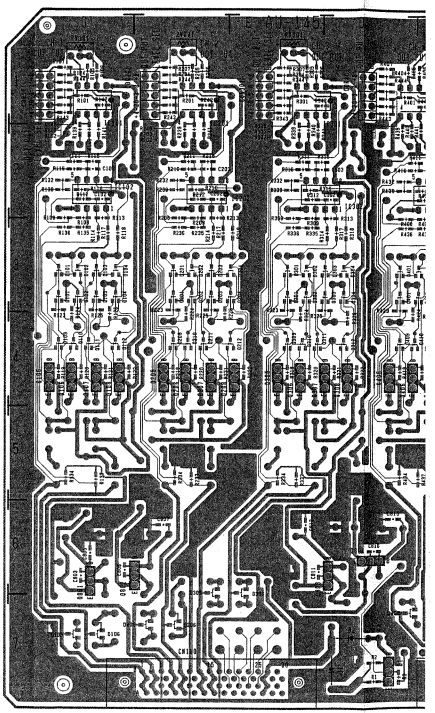

(1-640-679-11) B SIDE

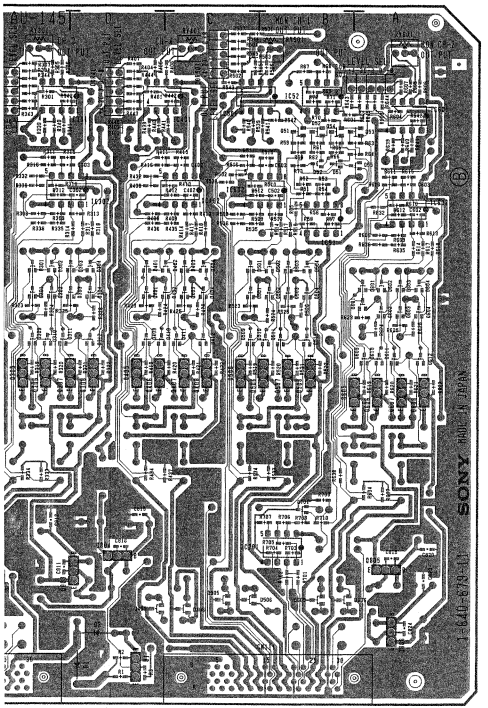

AU-145 BOARD (1-640-679-11)
BVW-D75PS

CN110	F-7	A	D601	A-3	B	Q205	F-4	A	Q601	A-3	B
CN111	C-7	A	D602	A-3	B	Q206	F-4	A	Q602	A-3	B
			D603	A-3	B	Q207	F-4	A	Q603	A-3	B
COR101	G-1	A	D604	A-3	B	Q208	E-4	A	Q604	A-3	B
COR201	F-1	A	D605	B-7	B	Q209	F-4	B	Q605	A-4	A
COR301	E-1	A	D606	A-7	B	Q210	F-4	B	Q606	A-4	A
COR401	D-1	A				Q211	F-4	B	Q607	A-4	A
COR501	C-1	A	IC51	B-2	A	Q212	E-4	B	Q608	A-4	A
COR601	A-1	A	IC52	B-1	A	Q301	E-3	B	Q609	A-4	B
			IC101	G-1	A	Q302	E-3	B	Q610	A-4	B
D1	D-7	A	IC102	G-2	A	Q303	D-3	B	Q611	A-4	B
D2	D-7	A	IC201	F-1	A	Q304	D-3	B	Q612	A-4	B
D51	B-2	B	IC202	F-2	A	Q305	E-4	A	Q801	G-6	A
D52	B-2	B	IC301	E-1	A	Q306	E-4	A	Q802	F-6	A
D101	G-3	B	IC302	E-2	A	Q307	D-4	A	Q803	F-6	A
D102	G-3	B	IC401	D-1	A	Q308	D-4	A	Q804	D-6	A
D103	G-3	B	IC402	C-2	A	Q309	E-4	B	Q805	A-6	A
D104	G-3	B	IC501	C-1	A	Q310	E-4	B	Q806	A-7	A
D105	G-7	B	IC502	B-2	A	Q311	D-4	B			
D106	G-7	B	IC601	A-1	A	Q312	D-4	B	RV101	G-1	A
D201	F-3	B	IC602	A-2	A	Q401	D-3	B	RV201	F-1	A
D202	F-3	B				Q402	C-3	B	RV301	E-1	A
D203	F-3	B	Q1	D-7	A	Q403	C-3	B	RV401	C-1	A
D204	E-3	B	Q51	B-2	B	Q404	C-3	B	RV501	B-1	A
D205	F-7	B	Q52	B-1	B	Q405	D-4	A	RV601	A-1	A
D206	F-7	B	Q53	A-2	B	Q406	C-4	A			
D301	E-3	B	Q54	B-1	B	Q407	C-4	A			
D302	E-3	B	Q55	A-2	B	Q408	C-4	A			
D303	D-3	B	Q101	G-3	B	Q409	D-4	B			
D304	D-3	B	Q102	G-3	B	Q410	C-4	B			
D305	F-6	B	Q103	G-3	B	Q411	C-4	B			
D306	E-6	B	Q104	G-3	B	Q412	C-4	B			
D401	D-3	B	Q105	G-4	A	Q501	B-3	B			
D402	C-3	B	Q106	G-4	A	Q502	B-3	B			
D403	C-3	B	Q107	G-4	A	Q503	B-3	B			
D404	C-3	B	Q108	G-4	A	Q504	B-3	B			
D405	D-7	B	Q109	G-4	B	Q505	C-4	A			
D406	C-7	B	Q110	G-4	B	Q506	B-4	A			
D501	B-3	B	Q111	G-4	B	Q507	B-4	A			
D502	B-3	B	Q112	G-4	B	Q508	B-4	A			
D503	B-3	B	Q201	F-3	B	Q509	C-4	B			
D504	B-3	B	Q202	F-3	B	Q510	B-4	B			
D505	C-7	B	Q203	F-3	B	Q511	B-4	B			
D506	B-7	B	Q204	E-3	B	Q512	B-4	B			

NOTE :

A : A Side

B : B Side

13-13

AU-146P BOARD (1-640-680-11)

U-146P BOARD (1-640-680-11)
SVW-D75PS

C[illegible]12	F-7	A	IC152	D-5	A	Q281	C-4	B	Q920	C-2	B
C 13	B-7	A	IC181	D-4	A	Q301	G-6	B	Q921	C-2	B
			IC201	E-6	A	Q302	F-6	B	Q922	C-2	B
COR901	A-1	A	IC202	F-6	A	Q303	G-6	B	Q923	C-2	B
			IC221	E-5	A	Q304	G-5	B	Q924	C-2	B
D 1	G-7	B	IC222	E-4	A	Q351	D-3	B	Q925	C-3	B
D201	E-7	B	IC223	F-5	A	Q401	E-6	B	Q926	C-3	B
D 1	G-6	B	IC251	C-4	A	Q402	E-6	B	Q927	A-1	B
D 2	G-5	G	IC252	C-5	A	Q403	F-6	B	Q928	A-1	B
D401	E-6	B	IC281	D-4	A	Q404	F-5	B	Q929	A-2	B
D402	F-5	B	IC301	F-6	A	Q451	C-3	B	Q930	A-2	B
D 1	B-4	B	IC302	G-6	A	Q501	B-4	B	Q931	A-2	B
D502	B-5	B	IC351	F-3	A	Q502	B-4	B	Q932	A-2	B
D503	B-5	B	IC352	F-1	A	Q503	B-4	B	Q933	A-2	B
D 1	A-4	B	IC353	G-1	A	Q504	B-4	B	Q934	A-2	B
D 2	A-5	B	IC354	D-3	A	Q505	B-5	B	Q935	B-2	B
D603	A-5	B	IC401	E-6	A	Q506	B-5	B	Q936	A-1	B
D 1	D-6	B	IC402	F-6	A	Q601	A-4	B	Q937	A-1	B
D 1	C-1	B	IC501	B-4	A	Q602	A-5	B	Q938	B-2	B
D902	C-2	B	IC502	B-5	A	Q603	A-4	B	Q939	B-2	B
D903	C-2	B	IC503	B-5	A	Q604	A-4	B	Q940	B-2	B
D 4	C-2	B	IC504	B-5	A	Q605	A-5	B			
D905	C-2	B	IC601	A-4	A	Q606	A-5	B	RV121	G-4	A
D906	C-3	B	IC602	A-5	A	Q801	D-6	A	RV151	D-4	A
D 7	A-1	B	IC603	A-5	A	Q802	C-6	A	RV181	D-4	A
D 8	A-2	B	IC604	A-5	A	Q803	D-6	B	RV221	F-4	A
D912	A-2	B	IC801	D-3	A	Q804	D-6	B	RV251	C-4	A
D 3	A-2	B	IC802	D-3	A	Q805	D-6	B	RV281	C-4	A
D 4	A-1	B	IC901	A-3	A	Q806	D-6	B	RV351	G-3	A
D915	B-1	B	IC902	A-2	A	Q901	A-3	B	RV352	F-1	A
			IC903	B-2	A	Q903	A-3	B	RV451	E-3	A
E 1	E-5	A	IC904	B-3	A	Q905	A-3	B	RV452	E-1	A
E251	C-5	A	IC905	B-3	A	Q907	B-2	B			
E351	G-2	A	IC906	B-3	A	Q909	A-3	B	S901	C-1	A
E 1	E-2	A				Q910	A-3	B			
			Q101	G-6	B	Q911	A-3	B	TP151	E-5	A
FL351	F-3	A	Q102	F-7	B	Q912	A-3	B	TP152	D-5	A
			Q151	D-4	B	Q913	B-3	B	TP251	C-5	A
I 01	G-6	A	Q152	D-4	B	Q914	B-3	B	TP252	C-5	A
IC102	G-6	A	Q181	D-4	B	Q915	C-1	B	TP351	G-2	A
IC121	G-5	A	Q201	E-6	B	Q916	C-1	B	TP352	G-2	A
I 22	G-4	A	Q202	E-7	B	Q917	C-2	B	TP451	G-1	A
IC123	G-5	A	Q251	C-4	B	Q918	C-2	B	TP452	E-3	A
IC151	D-4	A	Q252	C-4	B	Q919	C-2	B			

NOTE :

A : A Side
B : B Side

A Side

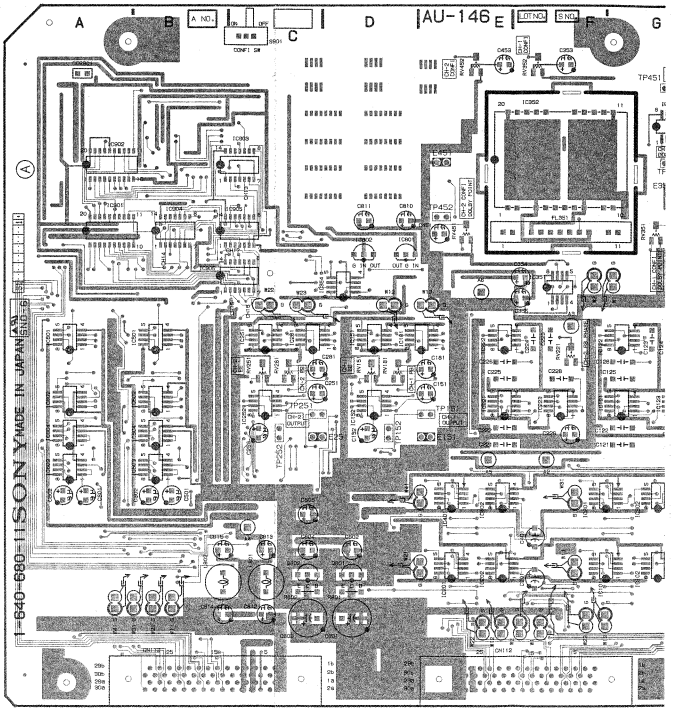

(1-640-680-11) A SIDE

B Side

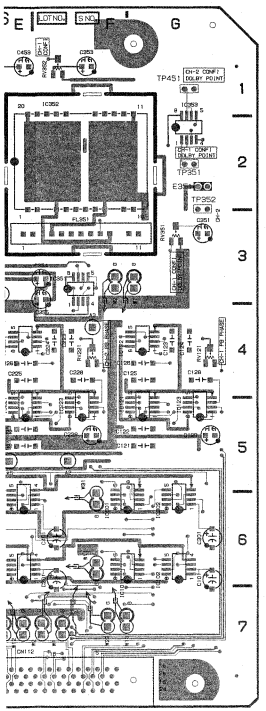

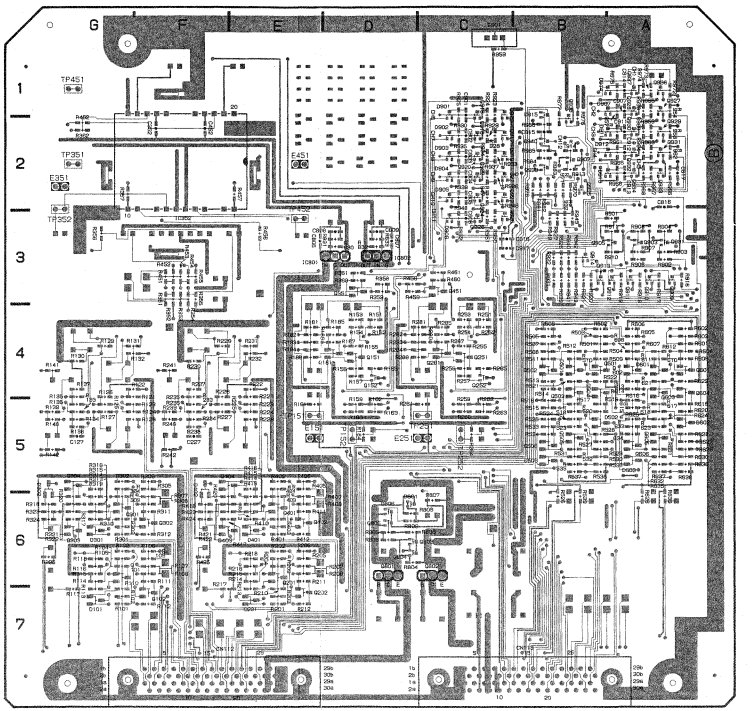

(1-640-680-11) B SIDE

AU-147P BOARD (1-640-681-11)

A Side

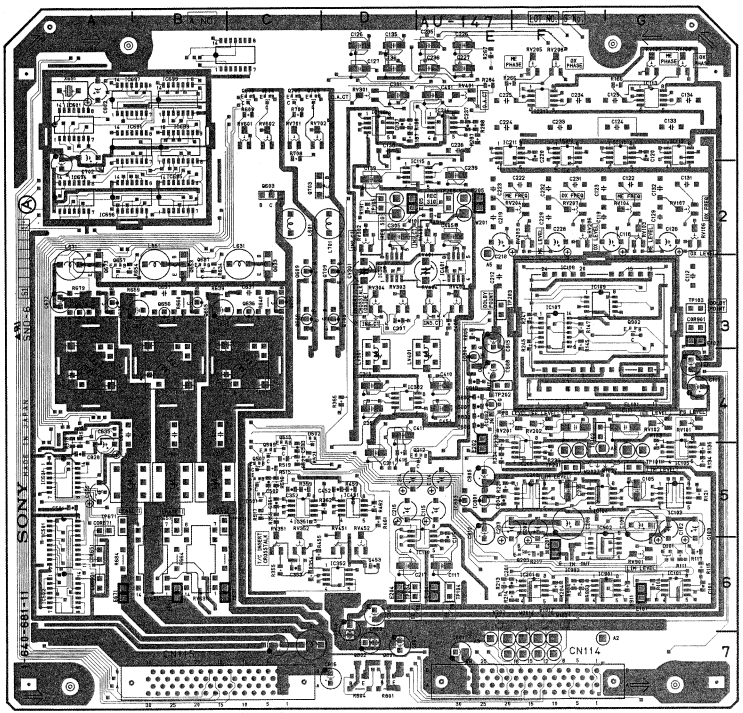

(1-640-681-11) A SIDE

B Side

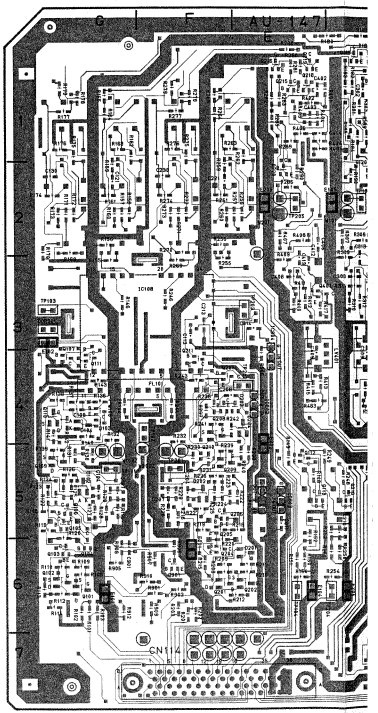

(1-640-681-11) B SIDE

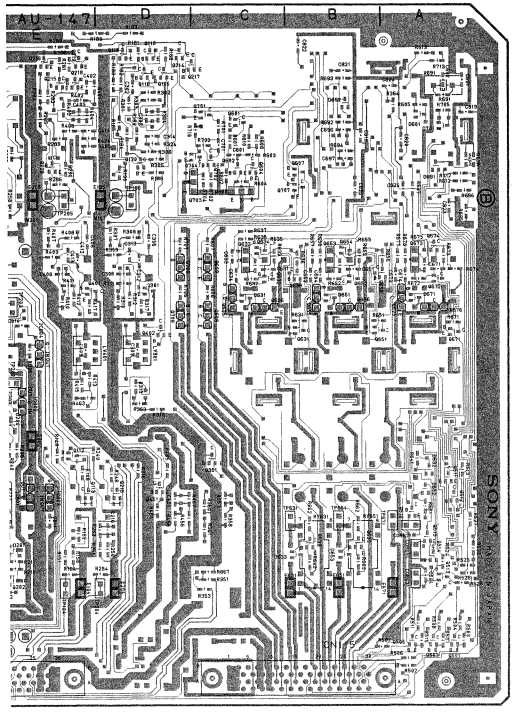

AU-147P BOARD (1-640-681-11)
BVW-D75PS

CN114	F-7 A	FL101	G-4 A	IC901	F-6 A	Q215	E-1 B	Q651	A-3 B	RV208	F-1 A	TP651	B-5 A		
CN115	B-7 A			IC902	F-5 A	Q216	E-1 B	Q652	B-3 B	RV301	D-1 A	TP671	A-5 A		
		IC101	G-6 A	IC903	F-6 A	Q217	C-1 B	Q653	B-3 A	RV302	D-2 A				
COR631	A-6 A	IC103	G-5 A			Q218	E-1 B	Q654	B-2 B	RV303	D-3 A	X691	A-1 A		
COR651	A-6 A	IC104	F-5 A	LV301	D-4 A	Q219	E-1 B	Q655	B-3 A	RV304	D-3 A				
COR671	A-5 A	IC105	G-5 A	LV401	D-4 A	Q220	E-2 B	Q656	B-3 A	RV351	C-5 A				
COR901	G-3 A	IC107	F-3 A	LV631	B-5 A	Q221	C-1 A	Q657	A-3 A	RV352	C-5 A				
		IC108	F-3 A	LV651	B-5 A	Q222	C-1 A	Q658	B-3 B	RV353	C-5 A				
CV301	D-3 A	IC109	F-3 A	LV671	A-5 A	Q301	D-3 B	Q659	B-6 B	RV401	E-1 A				
CV401	E-3 A	IC110	D-6 A			Q351	C-5 B	Q671	A-3 B	RV402	E-2 A				
		IC111	G-1 A	Q101	G-6 B	Q401	D-3 B	Q672	A-3 B	RV403	E-3 A				
D101	G-6 A	IC112	G-1 A	Q102	G-6 B	Q402	D-3 B	Q673	A-3 A	RV404	E-3 A				
D102	G-5 B	IC113	G-1 A	Q103	G-6 B	Q451	D-5 B	Q674	A-2 B	RV451	D-5 A				
D103	G-4 B	IC114	D-1 A	Q104	G-6 B	Q501	A-7 B	Q675	A-3 A	RV452	D-5 A				
D104	G-4 B	IC115	D-2 A	Q105	G-5 B	Q503	A-7 B	Q676	A-3 A	RV453	D-5 A				
D201	E-6 B	IC201	F-6 A	Q106	G-5 B	Q505	A-7 B	Q701	C-1 B	RV601	C-1 A				
D202	F-5 B	IC203	F-5 A	Q107	G-4 B	Q507	C-5 A	Q702	C-2 B	RV602	C-1 A				
D203	E-4 B	IC205	F-5 A	Q108	G-4 B	Q508	C-5 A	Q703	C-2 A	RV701	C-1 A				
D204	E-4 B	IC211	E-1 A	Q109	G-5 B	Q509	C-5 A	Q704	C-2 B	RV702	C-1 A				
D501	C-5 A	IC212	F-1 A	Q110	G-4 B	Q510	C-4 A	Q705	C-1 A	RV901	G-6 A				
D502	C-4 A	IC213	F-1 A	Q111	G-4 B	Q511	A-5 B	Q706	C-1 A						
D601	A-1 B	IC214	E-1 A	Q112	E-5 B	Q512	A-5 B	Q707	B-2 B	RY631	B-6 A				
D631	C-3 B	IC301	D-3 A	Q113	E-5 B	Q513	A-6 B	Q708	D-3 A	RY651	B-6 A				
D632	A-5 B	IC302	D-4 A	Q115	D-1 B	Q514	A-6 B	Q709	D-3 A						
D633	B-6 B	IC351	C-5 A	Q116	D-1 B	Q515	A-6 B	Q801	D-7 A	T631	C-4 A				
D651	B-3 B	IC352	D-6 A	Q118	D-1 B	Q516	A-5 B	Q802	D-7 A	T651	B-4 A				
D652	A-5 B	IC401	E-3 A	Q119	D-1 B	Q601	C-1 B	Q901	F-6 B	T671	A-4 A				
D653	B-6 B	IC451	D-5 A	Q120	D-2 B	Q602	C-2 B	Q902	G-3 A						
D671	A-3 B	IC501	A-5 A	Q121	C-1 A	Q603	C-2 A			TP102	F-5 A				
D691	A-2 B	IC502	A-6 A	Q122	C-1 A	Q604	C-2 B	RV101	G-4 A	TP103	G-3 A				
D692	B-1 B	IC601	A-1 A	Q201	F-6 B	Q605	C-1 A	RV102	G-4 A	TP104	E-6 A				
D701	A-1 B	IC631	A-5 A	Q202	E-6 B	Q606	C-1 A	RV103	G-2 A	TP105	D-2 A				
		IC691	A-1 A	Q203	F-6 A	Q607	B-2 B	RV104	G-2 A	TP201	F-5 A				
E101	G-6 A	IC692	C-1 A	Q204	F-6 B	Q608	C-3 A	RV105	G-1 A	TP202	E-4 A				
E102	G-3 A	IC693	B-1 A	Q205	F-5 B	Q609	C-3 A	RV106	G-2 A	TP203	E-3 A				
E104	E-6 A	IC694	A-2 A	Q206	E-5 B	Q631	B-3 B	RV107	G-2 A	TP204	D-6 A				
E105	E-2 A	IC695	B-2 A	Q207	E-4 B	Q632	C-3 B	RV108	G-1 A	TP205	E-2 A				
E201	F-6 A	IC696	A-2 A	Q208	F-4 B	Q633	C-3 A	RV201	E-4 A	TP251	C-5 A				
E202	E-5 A	IC697	A-1 A	Q209	E-5 B	Q634	C-2 B	RV202	F-4 A	TP252	C-5 A				
E204	D-6 A	IC699	B-1 A	Q210	F-5 B	Q635	C-3 A	RV203	F-2 A	TP351	G-2 A				
E205	E-2 A	IC801	E-5 A	Q211	F-4 B	Q636	C-3 A	RV204	E-2 A	TP352	G-2 A				
E631	C-6 A	IC802	E-4 A	Q212	D-5 A	Q637	B-3 A	RV205	F-1 A	TP451	G-1 A				
E651	B-6 A	IC803	E-5 A	Q213	D-5 B	Q638	B-3 B	RV206	F-2 A	TP452	E-3 A				
E671	A-6 A	IC804	E-4 A	Q214	D-1 B	Q639	B-6 B	RV207	F-2 A	TP631	C-5 A				

NOTE :

A : A Side

B : B Side

13-15

HP-47, VR-110/111, DP-126/127 BOARD

HP-47 BOARD (1-640-692-11)

A Side

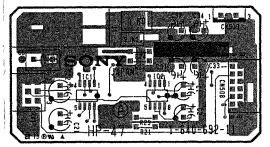

(1-640-692-11) A SIDE

B Side

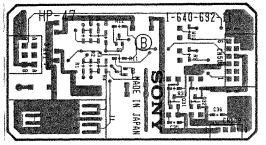

(1-640-692-11) B SIDE

VR-110 BOARD (1-640-665-11)

A Side

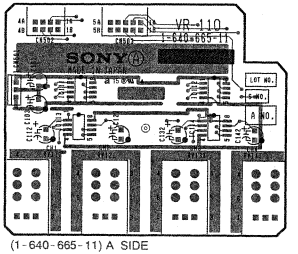

(1-640-665-11) A SIDE

B Side

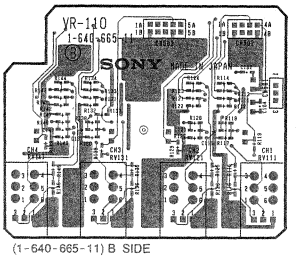

(1-640-665-11) B SIDE

VR-111 BOARD (1-640-666-11)

A Side

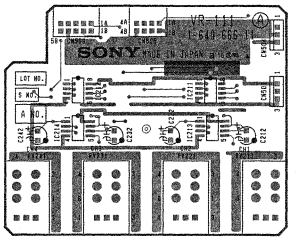

(1-640-666-11) A SIDE

B Side

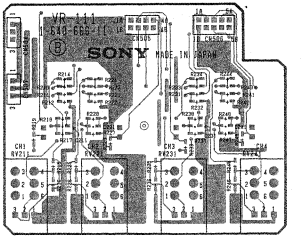

(1-640-666-11) B SIDE

DP-126 BOARD

A Side

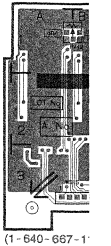

(1-640-667-1

B Side

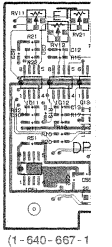

(1-640-667-1

13-16

HP-47, VR-110/111, DP-126/127 BOARD

DP-126 BOARD (1-640-667-11)

A Side

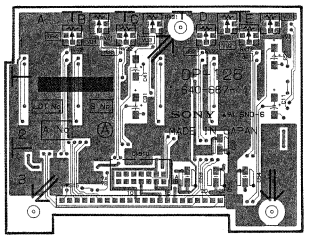

(1-640-667-11) A SIDE

B Side

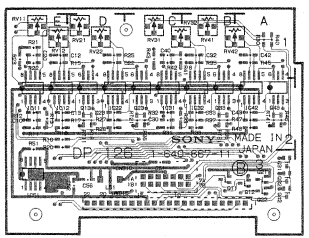

(1-640-667-11) B SIDE

DP-126 BOARD (1-640-667-11)
BVW-D75PS

CN510	C-3	A
IC11	E-2	B
IC12	E-2	B
IC22	D-2	B
IC31	C-2	B
IC32	B-2	B
IC42	A-2	B
IC51	E-3	B
Q11	B-3	B
Q12	A-3	B
Q13	D-2	B
Q21	A-3	B
Q22	A-3	B
Q23	C-2	B
Q31	A-3	B
Q32	A-3	B
Q33	B-2	B
Q42	A-3	B
Q43	A-2	B
RT11	D-2	B
RT21	C-2	B
RT31	B-2	B
RT41	A-2	B
RV11	E-1	A
RV12	E-1	A
RV21	D-1	A
RV22	D-1	A
RV31	C-1	A
RV32	C-1	A
RV41	B-1	A
RV42	B-1	A

NOTE :
A : A Side
B : B Side

DP-127 BOARD (1-640-668-11)

A Side

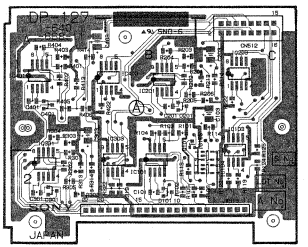

(1-640-668-11) A SIDE

B Side

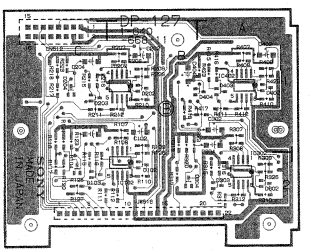

(1-640-668-11) B SIDE

DP-127 BOARD (1-640-668-11)
BVW-D75PS

D101	B-2	A
D102	B-2	B
D103	C-2	B
D104	C-2	B
D201	B-1	A
D202	B-1	B
D203	C-1	B
D204	C-1	B
D301	A-2	A
D302	A-2	B
D303	A-2	B
D304	B-2	B
D401	A-1	A
D402	A-1	B
D403	A-1	B
D404	A-1	B
IC101	B-2	A
IC102	B-2	B
IC103	C-1	A
IC104	C-2	A
IC105	C-1	A
IC201	B-1	A
IC202	B-1	B
IC203	C-1	A
IC301	A-1	A
IC302	A-2	B
IC303	B-2	A
IC401	A-1	A
IC402	A-1	B
IC403	B-1	A
Q101	B-1	A

NOTE :
A : A Side
B : B Side

13-16

DP-128/129/156, SWC-10, VR-119 BOARD

DP-128 BOARD (1-640-669-11)

A Side

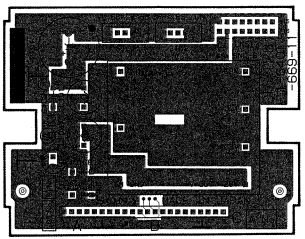

(1-640-669-11) A SIDE

B Side

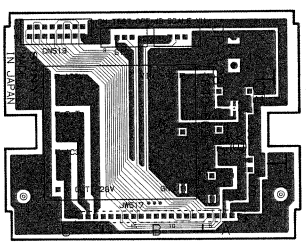

(1-640-669-11) B SIDE

DP-129 BOARD (1-640-670-11)

A Side

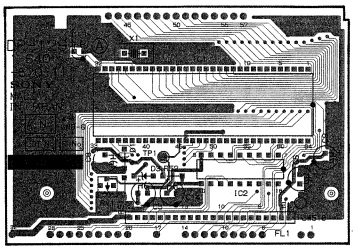

(1-640-670-11) A SIDE

B Side

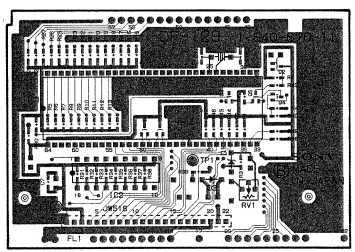

(1-640-670-11) B SIDE

SWC-10 BOARD (1-640-689-11)

A Side

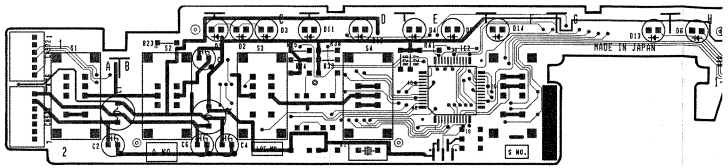

(1-640-689-11) A SIDE

B Side

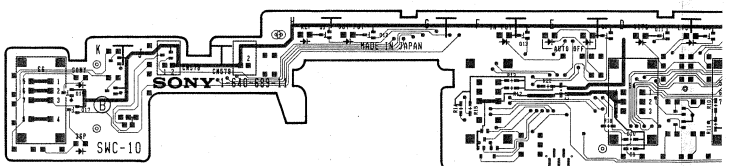

(1-640-689-11) B SIDE

DP-128 BOARD (1-640-669-11)
BVW-D75PS

CN513 C-1 B

S101 B-1 A
S102 B-1 A

NOTE :
A : A Side
B : B Side

13-17

DP-128/129/156, SWC-10, VR-119 BOARD

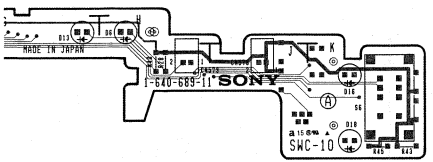

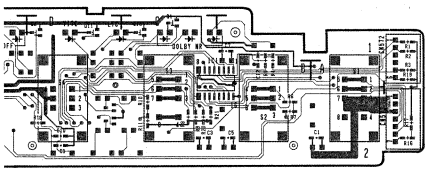

SWC-10 BOARD (1-640-689-11)
BVW-D75PS

CN572	A-1	A
CN573	A-2	A
CN578	J-1	A
CN579	H-1	A
D1	C-1	A
D2	C-1	A
D3	C-1	A
D4	E-1	A
D5	E-1	A
D6	H-1	A
D11	D-1	A
D12	D-1	A
D13	G-1	A
D14	F-1	A
D16	K-2	A
D18	K-2	A
IC1	C-1	B
IC2	E-1	A
Q1	C-1	B
Q2	D-1	B
Q3	H-1	B
Q10	C-1	B
Q11	D-1	B
Q12	G-1	B
Q13	E-1	B
Q15	K-2	B
Q17	K-2	B
S1	A-1	A
S2	B-1	A
S3	C-1	A
S4	D-1	A
S6	K-2	A
X1	D-2	A

NOTE :
A : A Side
B : B Side

DP-156 BOARD (1-640-671-11)

A Side

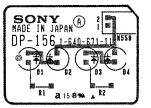

(1-640-671-11) A SIDE

B Side

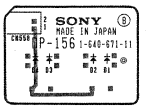

(1-640-671-11) B SIDE

VR-119 BOARD (1-640-696-11)

A Side

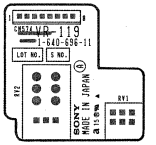

(1-640-696-11) A SIDE

B Side

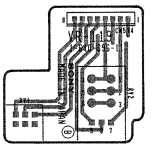

(1-640-696-11) B SIDE

13-17

SS-48DP BOARD (1-640-029-22)

SS-48DP BOARD (1-640-029-22)
BVW-D75PS

CN1	F-1	A	E101	L-7	A	IC410	G-6	A	IC711	C-5	A
CN139	N-7	A	E401	N-2	A	IC411	K-6	A	IC801	B-5	A
CN140	H-7	A	E601	F-4	A	IC412	K-6	A	IC802	G-7	A
CN141	C-7	A	E602	B-1	A	IC413	G-6	A	IC803	A-3	A
			E801	A-7	A	IC414	K-3	A	IC804	B-6	A
COR1	O-4	A				IC501	H-3	A	IC805	A-7	A
			IC1	O-2	A	IC502	G-5	A	IC806	B-5	A
CV401	M-1	A	IC2	K-5	A	IC504	F-5	A	IC807	B-5	A
CV402	M-1	A	IC3	P-1	A	IC505	F-4	A	IC808	A-7	A
			IC4	P-1	A	IC506	H-5	A	IC809	A-6	A
D101	F-3	B	IC5	N-3	A	IC507	H-5	A	IC810	A-6	A
D102	F-4	B	IC6	M-3	A	IC508	F-4	A			
D201	P-5	B	IC7	M-4	A	IC510	G-4	A	0401	K-7	B
D202	P-6	B	IC8	N-2	A	IC511	H-3	A	0402	K-7	B
D301	M-1	A	IC10	P-1	A	IC514	F-3	A	0404	J-7	B
D401	F-5	B	IC11	P-4	A	IC601	H-5	A	0405	J-6	B
D402	G-5	B	IC15	F-4	A	IC602	C-6	A	0406	M-1	B
D403	G-5	B	IC101	K-5	A	IC603	A-1	A	0407	M-1	B
D404	F-6	B	IC102	K-5	A	IC604	C-1	A	0408	M-1	B
D405	F-6	B	IC103	L-4	A	IC605	B-4	A	0409	M-1	B
D406	K-4	B	IC104	L-4	A	IC606	B-3	A	0410	N-1	B
D601	C-6	B	IC105	M-7	A	IC607	D-2	A	0411	K-6	B
D602	C-6	B	IC106	M-7	A	IC608	C-3	A	0412	G-5	B
D603	C-6	B	IC107	L-7	A	IC609	D-3	A	0601	C-1	B
D604	H-5	B	IC201	P-4	A	IC610	E-3	A	0602	C-1	B
D605	C-6	B	IC202	P-7	A	IC611	D-3	A	0603	C-1	B
D606	C-6	B	IC203	P-5	A	IC612	D-2	A	0604	E-7	B
D607	C-6	B	IC204	P-5	A	IC613	E-4	A	0605	E-7	B
D608	A-3	B	IC205	N-5	A	IC615	B-2	A	0606	J-7	B
D609	A-3	B	IC206	N-6	A	IC616	A-3	A	0701	C-4	B
D610	A-1	B	IC207	N-7	A	IC617	H-6	A	0702	B-4	B
D611	C-2	B	IC208	P-7	A	IC618	D-6	A	0703	F-6	B
D612	C-2	B	IC301	G-2	A	IC619	J-6	A	0704	E-6	B
D613	C-2	B	IC302	N-4	A	IC620	C-6	A	0705	E-6	B
D614	C-2	B	IC303	F-1	A	IC621	E-3	A	0706	E-6	B
D615	B-2	B	IC401	L-2	A	IC622	E-2	A	0707	E-6	B
D616	E-2	B	IC402	K-4	A	IC701	B-4	A	0708	C-4	B
D618	D-1	A	IC403	J-1	A	IC702	A-4	A	0709	C-4	B
D619	E-1	A	IC404	J-3	A	IC703	C-6	A	0710	B-4	B
D620	E-1	A	IC405	N-2	A	IC704	C-6	A	0711	B-4	B
D701	C-5	B	IC406	K-4	A	IC706	D-4	A	0801	A-5	B
D702	D-6	B	IC407	J-4	A	IC707	D-6	A	0802	A-2	B
D703	E-6	B	IC408	M-2	A	IC709	E-4	A	0803	A-2	B
D801	A-6	B	IC409	J-4	A	IC710	F-5	A	0805	A-4	A

S1	Q-1	A	TP711	E-3	A						
S2	P-1	A	TP712	B-3	A						
S201	P-6	A	TP713	C-7	A						
S301	K-1	A	TP714	A-4	A						
S302	K-1	A	TP715	A-6	A						
S303	L-1	A	TP716	D-1	A						
S304	L-1	A	TP717	E-1	A						
S601	B-1	A	TP718	A-4	A						
S602	A-1	A	TP719	A-3	A						
			TP720	A-3	A						
TP5	P-2	A	TP722	C-5	A						
TP6	P-2	A	TP723	C-5	A						
TP101	L-6	A	TP724	F-7	A						
TP102	K-5	A	TP725	C-5	A						
TP103	L-7	A	TP801	F-7	A						
TP104	L-7	A	TP802	G-7	A						
TP105	L-4	A	TP803	A-6	A						
TP401	J-6	A	TP804	B-7	A						
TP403	K-4	A	TP805	D-7	A						
TP404	P-7	A	TP806	D-1	A						
TP408	J-1	A									
TP501	G-3	A	X1	P-2	A						
TP502	F-2	A	X101	L-4	A						
TP503	F-5	A	X401	K-1	A						
TP504	G-3	A	X402	M-1	A						
TP505	G-3	A	X501	F-3	A						
TP506	J-4	A	X601	B-2	A						
TP507	G-1	A	X701	B-4	A						
TP508	G-4	A	X702	D-6	A						
TP509	K-3	A									
TP601	B-4	A									
TP603	B-2	A									
TP605	A-1	A									
TP606	A-1	A									
TP607	F-1	A									
TP701	B-3	A									
TP702	B-6	A									
TP703	F-2	A									
TP704	E-2	A									
TP705	C-4	A									
TP706	D-4	A									
TP708	C-1	A									
TP709	A-4	A									
TP710	E-3	A									

NOTE :
A : A Side
B : B Side

A Side

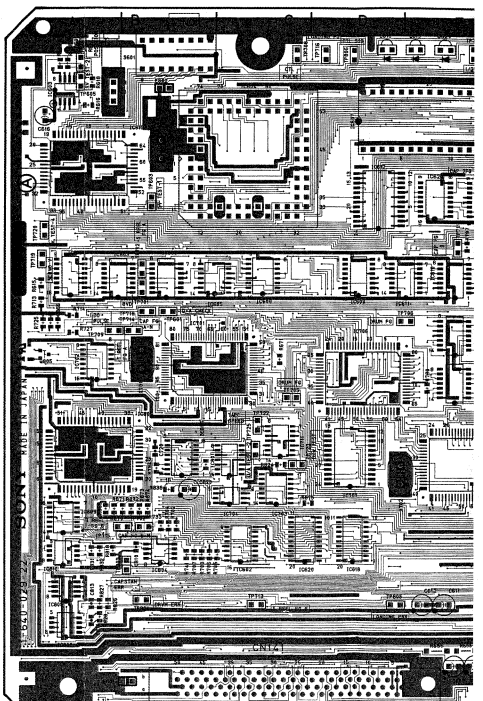

(1-640-029-22) A SIDE

13-18

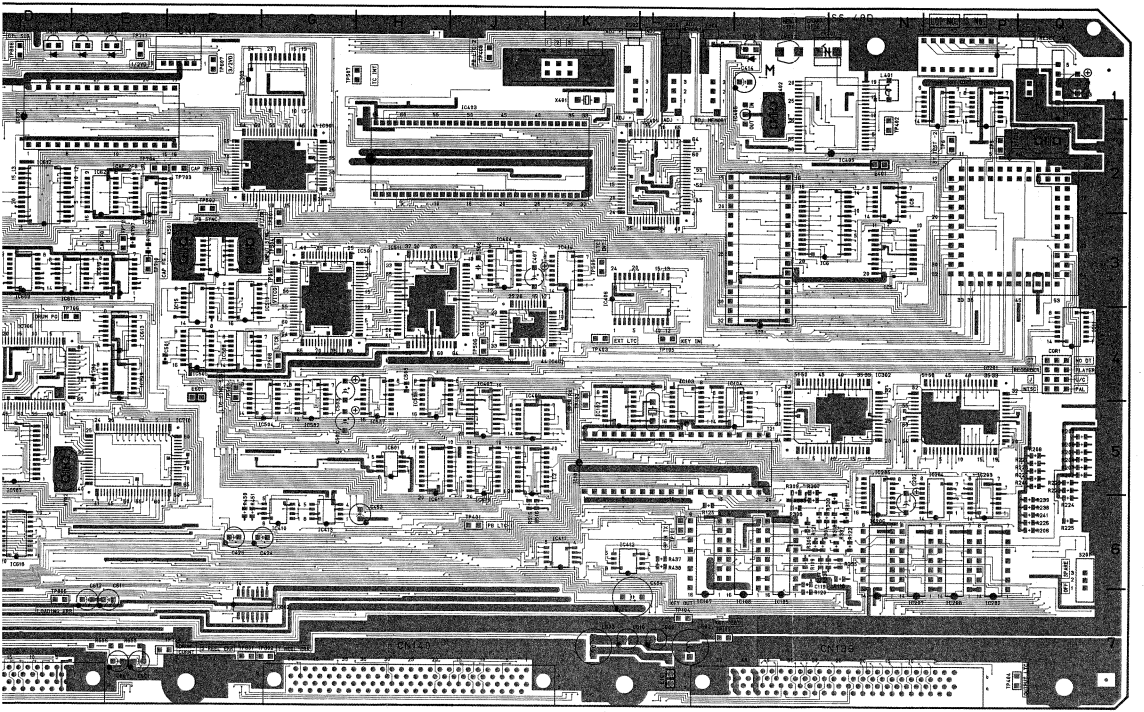

13-18

SS-48DP BOARD (1-640-029-22)

B Side

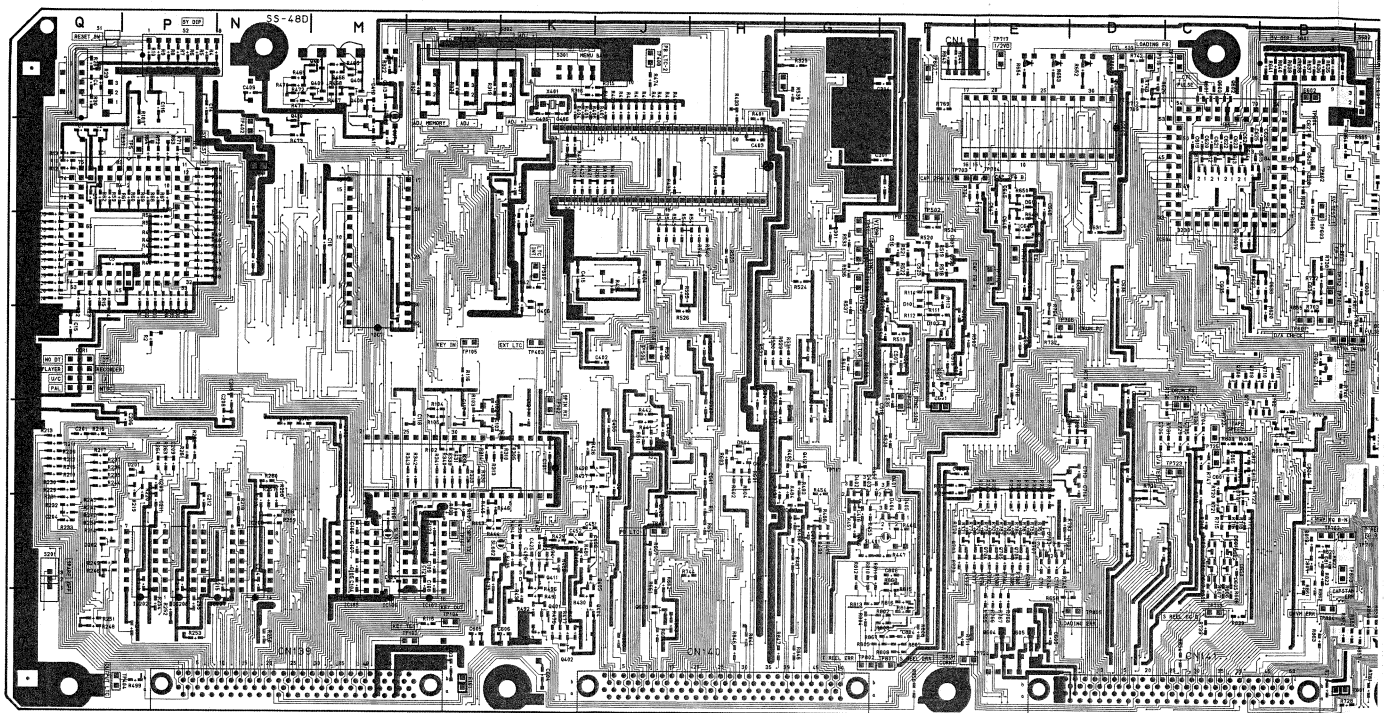

(1-640-029-22) B SIDE

13-19

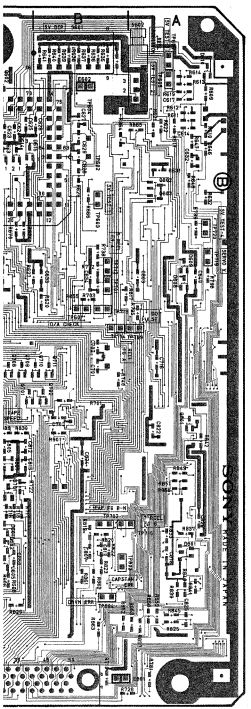

SS-48DP BOARD (1-640-029-22)
BVW-D75PS

CN1	F-1	A	E101	L-7	A	IC410	G-6	A	IC711	C-5	A	S1	Q-1	A	TP711	E-3	A
CN139	N-7	A	E401	N-2	A	IC411	K-6	A	IC801	B-5	A	S2	P-1	A	TP712	B-3	A
CN140	H-7	A	E601	F-4	A	IC412	K-6	A	IC802	G-7	A	S201	P-6	A	TP713	C-7	A
CN141	C-7	A	E602	B-1	A	IC413	G-6	A	IC803	A-3	A	S301	K-1	A	TP714	A-4	A
			E801	A-7	A	IC414	K-3	A	IC804	B-6	A	S302	K-1	A	TP715	A-6	A
COR1	Q-4	A				IC501	H-3	A	IC805	A-7	A	S303	L-1	A	TP716	D-1	A
			IC1	Q-2	A	IC502	G-5	A	IC806	B-5	A	S304	L-1	A	TP717	E-1	A
CV401	M-1	A	IC2	K-5	A	IC504	F-5	A	IC807	B-5	A	S601	B-1	A	TP718	A-4	A
CV402	M-1	A	IC3	P-1	A	IC505	F-4	A	IC808	A-7	A	S602	A-1	A	TP719	A-3	A
			IC4	P-1	A	IC506	H-5	A	IC809	A-6	A				TP720	A-3	A
D101	F-3	B	IC5	N-3	A	IC507	H-5	A	IC810	A-6	A	TP5	P-2	A	TP722	C-5	A
D102	F-4	B	IC6	M-3	A	IC508	F-4	A				TP6	P-2	A	TP723	C-5	A
D201	P-5	B	IC7	M-4	A	IC510	G-4	A	Q401	K-7	B	TP101	L-6	A	TP724	F-7	A
D202	P-6	B	IC8	N-2	A	IC511	H-3	A	Q402	K-7	B	TP102	K-5	A	TP725	C-5	A
D301	M-1	A	IC10	P-1	A	IC514	F-3	A	Q404	J-7	B	TP103	L-7	A	TP801	F-7	A
D401	F-5	B	IC11	P-4	A	IC601	H-5	A	Q405	J-6	B	TP104	L-7	A	TP802	G-7	A
D402	G-5	B	IC15	F-4	A	IC602	C-6	A	Q406	M-1	B	TP105	L-4	A	TP803	A-6	A
D403	G-5	B	IC101	K-5	A	IC603	A-1	A	Q407	M-1	B	TP401	J-6	A	TP804	B-7	A
D404	F-6	B	IC102	K-5	A	IC604	C-1	A	Q408	M-1	B	TP403	K-4	A	TP805	D-7	A
D405	F-6	B	IC103	L-4	A	IC605	B-4	A	Q409	M-1	B	TP404	P-7	A	TP806	D-1	A
D406	K-4	B	IC104	L-4	A	IC606	B-3	A	Q410	N-1	B	TP408	J-1	A			
D601	C-6	B	IC105	M-7	A	IC607	D-2	A	Q411	K-6	B	TP501	G-3	A	X1	P-2	A
D602	C-6	B	IC106	M-7	A	IC608	C-3	A	Q412	G-5	B	TP502	F-2	A	X101	L-4	A
D603	C-6	B	IC107	L-7	A	IC609	D-3	A	Q601	C-1	B	TP503	F-5	A	X401	K-1	A
D604	H-5	B	IC201	P-4	A	IC610	E-3	A	Q602	C-1	B	TP504	G-3	A	X402	M-1	A
D605	C-6	B	IC202	P-7	A	IC611	D-3	A	Q603	C-1	B	TP505	G-3	A	X501	F-3	A
D606	C-6	B	IC203	P-5	A	IC612	D-2	A	Q604	E-7	B	TP506	J-4	A	X601	B-2	A
D607	C-6	B	IC204	P-5	A	IC613	E-4	A	Q605	E-7	B	TP507	G-1	A	X701	B-4	A
D608	A-3	B	IC205	N-5	A	IC615	B-2	A	Q606	J-7	B	TP508	G-4	A	X702	D-6	A
D609	A-3	B	IC206	N-6	A	IC616	A-3	A	Q701	C-4	B	TP509	K-3	A			
D610	A-1	B	IC207	N-7	A	IC617	H-6	A	Q702	B-4	B	TP601	B-4	A			
D611	C-2	B	IC208	P-7	A	IC618	D-6	A	Q703	F-6	B	TP603	B-2	A			
D612	C-2	B	IC301	G-2	A	IC619	J-6	A	Q704	E-6	B	TP605	A-1	A			
D613	C-2	B	IC302	N-4	A	IC620	C-6	A	Q705	E-6	B	TP606	A-1	A			
D614	C-2	B	IC303	F-1	A	IC621	E-3	A	Q706	E-6	B	TP607	F-1	A			
D615	B-2	B	IC401	L-2	A	IC622	E-2	A	Q707	E-6	B	TP701	B-3	A			
D616	E-2	B	IC402	K-4	A	IC701	B-4	A	Q708	C-4	B	TP702	B-6	A			
D618	D-1	A	IC403	J-1	A	IC702	A-4	A	Q709	C-4	B	TP703	F-2	A			
D619	E-1	A	IC404	J-3	A	IC703	C-6	A	Q710	B-4	B	TP704	E-2	A			
D620	E-1	A	IC405	N-2	A	IC704	C-6	A	Q711	B-4	B	TP705	C-4	A			
D701	C-5	B	IC406	K-4	A	IC706	D-4	A	Q801	A-5	B	TP706	D-4	A			
D702	D-6	B	IC407	J-4	A	IC707	D-6	A	Q802	A-2	B	TP708	C-1	A			
D703	E-6	B	IC408	M-2	A	IC709	E-4	A	Q803	A-2	B	TP709	A-4	A			
D801	A-6	B	IC409	J-4	A	IC710	F-5	A	Q805	A-4	A	TP710	E-3	A			

NOTE :

A : A Side

B : B Side

13-19

DT-28 BOARD (1-640-682-11)

A Side

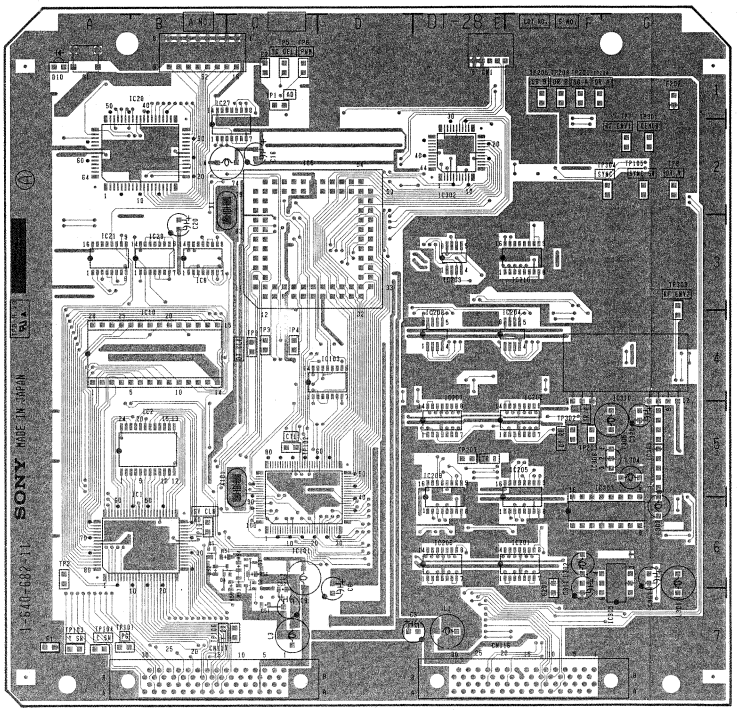

(1-640-682-11) A SIDE

B Side

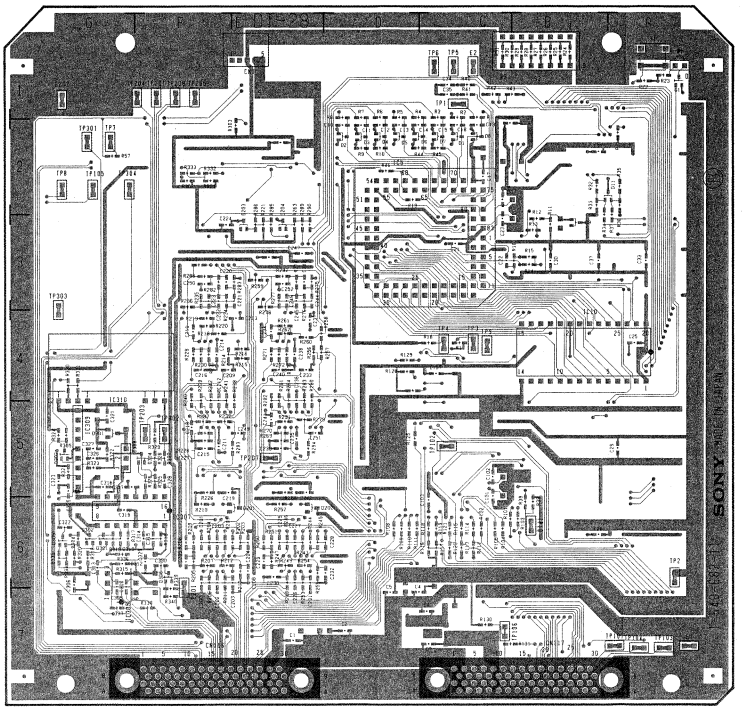

(1-640-682-11) B SIDE

13-20

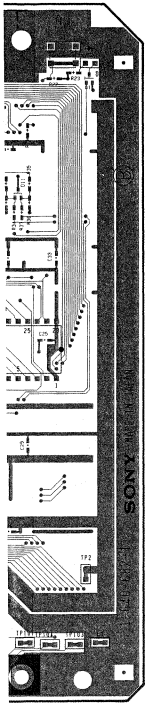

DT-28 BOARD (1-640-682-11)
BVW-D75PS

CN1	E-1	A	IC208	E-4	A	TP205	F-1	A
CN116	E-7	A	IC209	E-5	A	TP207	E-5	A
CN117	B-7	A	IC210	F-3	A	TP208	F-1	A
			IC302	E-2	A	TP301	G-1	A
D1	C-2	B	IC305	G-7	A	TP302	F-5	A
D2	D-2	B	IC307	G-5	A	TP303	G-3	A
D3	D-2	B	IC308	F-5	A	TP304	G-2	A
D4	D-2	B	IC309	G-5	A			
D5	D-2	B	IC310	G-4	A	X1	B-2	A
D6	C-2	B				X101	B-5	A
D7	C-2	B	Q1	A-1	B			
D8	C-2	B	Q2	C-6	A			
D9	B-3	B	Q3	C-6	A			
D10	A-1	A	Q4	B-6	A			
D11	A-2	B	Q5	B-6	A			
D201	E-6	B	Q301	G-6	B			
D202	D-6	B	Q302	G-6	B			
D203	E-2	B	Q303	G-5	B			
D204	E-2	B	Q304	F-5	B			
D301	G-5	B	Q305	G-6	B			
			Q306	F-6	B			
E1	A-7	A						
E2	C-1	A	S1	A-1	A			
E201	F-7	A	S2	B-1	A			
E202	G-1	A						
			TP1	C-1	A			
IC1	B-5	A	TP2	A-6	A			
IC2	B-5	A	TP3	C-4	A			
IC5	C-2	A	TP4	C-4	A			
IC8	B-3	A	TP5	C-1	A			
IC10	B-4	A	TP6	C-1	A			
IC20	B-1	A	TP7	G-1	A			
IC21	A-3	A	TP8	G-2	A			
IC27	B-1	A	TP9	C-4	A			
IC29	B-3	A	TP10	B-6	A			
IC101	C-6	A	TP101	A-7	A			
IC103	D-4	A	TP102	C-5	A			
IC201	F-6	A	TP103	A-7	A			
IC202	F-4	A	TP104	A-7	A			
IC203	E-3	A	TP105	G-2	A			
IC204	F-4	A	TP106	B-7	A			
IC205	F-5	A	TP201	F-1	A			
IC206	E-6	A	TP203	F-5	A			
IC207	E-4	A	TP204	F-1	A			

NOTE :
A : A Side
B : B Side

DT-29 BOARD (1-640-693-11)

A Side

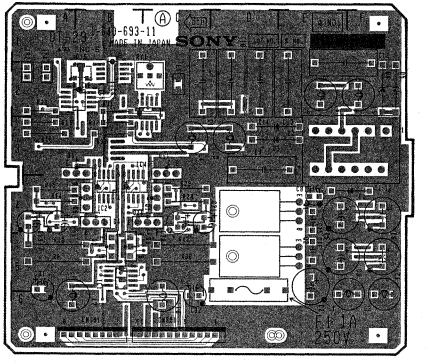

(1-640-693-11) A SIDE

B Side

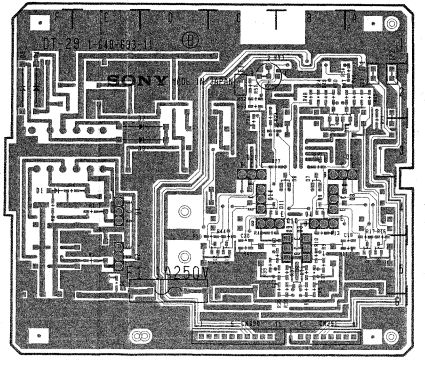

(1-640-693-11) B SIDE

DT-29 BOARD (1-640-693-11)
BVW-D75PS

CN390	C-6	A	TP1	A-1	A		
CN391	B-6	A	TP2	A-1	A		
			TP3	B-3	A		
D1	F-4	A	TP5	B-2	A		
D2	E-3	A					
D3	E-3	A					
D4	F-2	A					
D5	F-2	A					
D6	B-5	B					
D7	B-4	B					
D8	B-4	B					
D9	B-4	B					
D11	B-4	B					
D12	A-3	B					
D13	B-3	B					
E1	C-2	A					
F1	E-6	A					
IC1	B-5	A					
IC2	B-4	A					
IC3	C-3	A					
IC4	B-3	A					
IC5	B-2	A					
IC6	B-2	A					
Q1	E-4	A					
Q2	E-5	A					
Q3	B-5	A					
Q4	B-4	A					
Q5	A-3	A					
Q6	A-5	B					
Q7	A-5	B					
Q8	A-4	A					
Q9	C-5	A					
Q10	B-4	A					
Q11	C-3	A					
Q12	C-5	B					
Q13	C-5	B					
Q14	C-4	A					
Q15	A-1	A					
T1	F-4	A					

NOTE :
A : A Side
B : B Side

DR-118B BOARD (1-640-030-32)

A Side

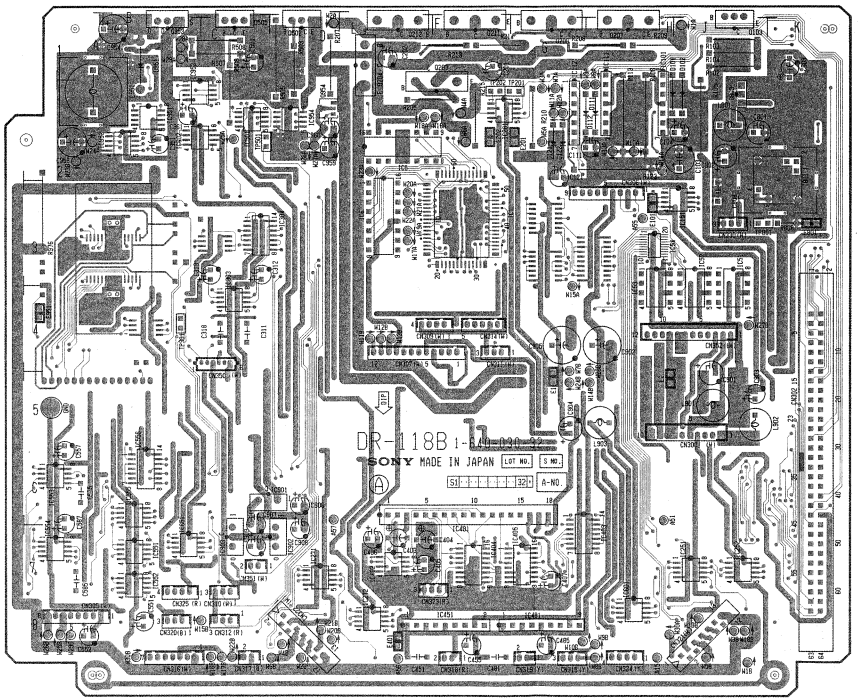

(1-640-030-32) A SIDE

B Side

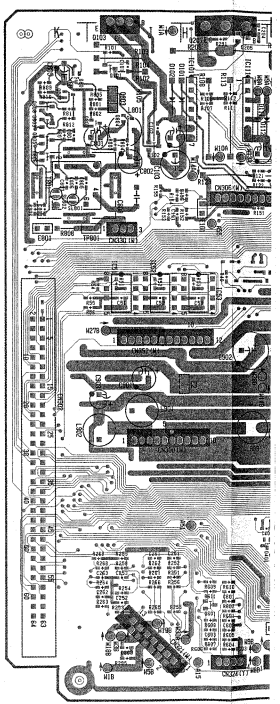

(1-640-030-32) B SIDE

13-21

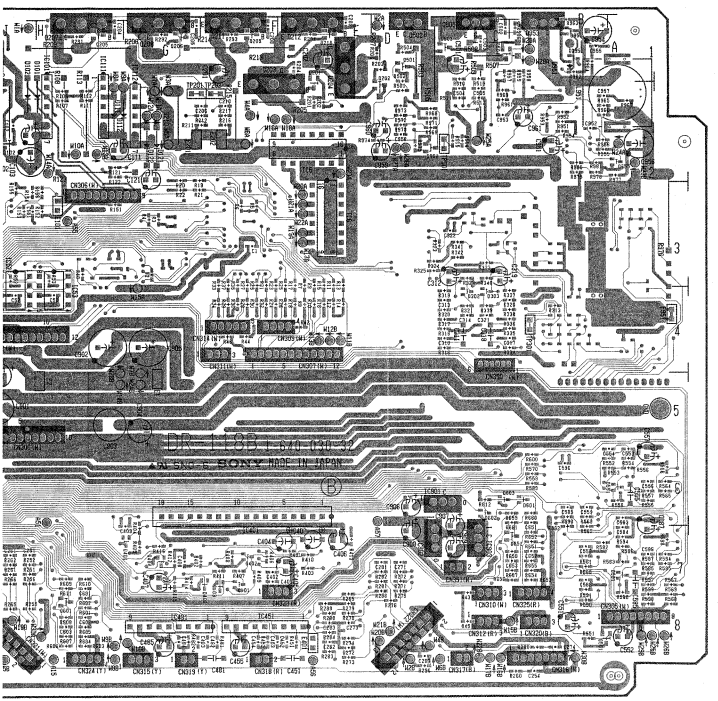

32) B SIDE

DR-118B BOARD (1-640-030-32)
BVW-D75PS

CN151	J-3 A	E1	G-5 A	IC902	D-7 A	Q809	K-2 B
CN152	J-3 A	E2	H-5 A	IC903	C-7 A	Q951	B-1 B
CN153	H-4 A	E101	H-3 A	IC951	B-2 A	Q952	B-1 B
CN300	J-5 A	E201	G-2 A	IC952	A-2 A	Q953	B-1 A
CN302	K-5 A	E401	E-8 A	IC953	B-1 A	Q954	D-2 A
CN305	A-8 A	E801	K-3 A	IC954	D-2 A	Q955	A-2 B
CN306	H-3 A	E951	A-4 A				
CN307	E-4 A			Q101	J-1 B	T801	K-3 A
CN309	E-4 A	IC1	F-3 A	Q102	J-2 B		
CN310	C-8 A	IC5	E-2 A	Q103	J-1 A	TP201	G-2 A
CN311	F-4 A	IC6	E-3 A	Q201	E-1 B	TP202	F-2 A
CN312	C-8 A	IC51	J-3 A	Q202	D-1 B	TP801	J-3 A
CN314	F-4 A	IC52	J-3 A	Q203	F-1 A		
CN315	G-8 A	IC53	H-4 A	Q204	F-1 A		
CN316	B-8 A	IC54	H-3 A	Q205	H-1 B		
CN317	C-8 A	IC101	H-1 A	Q206	G-1 B		
CN318	F-8 A	IC111	H-1 A	Q207	H-1 A		
CN319	G-8 A	IC112	G-1 A	Q208	G-1 A		
CN320	B-8 A	IC151	J-3 A	Q209	F-1 B		
CN321	J-8 A	IC201	F-2 A	Q210	E-1 B		
CN322	D-8 A	IC251	J-7 A	Q211	F-1 A		
CN323	E-8 A	IC252	J-7 A	Q212	E-1 A		
CN324	H-8 A	IC271	D-7 A	Q401	F-8 B		
CN325	B-8 A	IC272	E-8 A	Q402	F-7 B		
CN330	J-3 A	IC303	C-3 A	Q403	F-8 B		
CN350	C-5 A	IC304	D-3 A	Q404	G-7 B		
CN351	C-7 A	IC401	F-7 A	Q501	D-1 B		
CN352	J-4 A	IC402	E-7 A	Q502	D-1 A		
		IC403	H-7 A	Q503	C-1 B		
D101	H-1 A	IC404	F-7 A	Q504	C-1 B		
D102	J-1 A	IC405	G-7 A	Q505	C-1 A		
D111	H-2 A	IC451	F-8 A	Q551	B-8 B		
D112	H-2 A	IC481	G-8 A	Q601	H-8 B		
D121	G-2 A	IC501	C-2 A	Q602	C-6 B		
D122	G-2 A	IC551	B-7 A	Q603	C-6 B		
D302	C-4 B	IC552	B-7 A	Q651	B-7 B		
D303	C-4 B	IC553	A-6 A	Q801	K-1 B		
D401	G-7 B	IC554	A-7 A	Q802	J-2 B		
D402	F-8 B	IC555	B-6 A	Q803	J-2 A		
D551	A-6 B	IC556	B-5 A	Q804	J-2 B		
D581	A-7 B	IC601	H-8 A	Q805	K-2 B		
D601	B-6 B	IC602	B-2 A	Q806	K-2 B		
D951	B-1 A	IC651	B-7 A	Q807	K-2 B		
D952	D-2 B	IC901	D-6 A	Q808	K-2 B		

NOTE :

A : A Side

B : B Side

13-21

DD-17 BOARD (1-640-678-11)

A Side

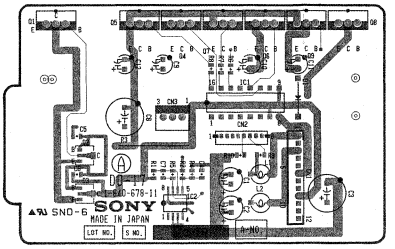

(1-640-678-11) A SIDE

B Side

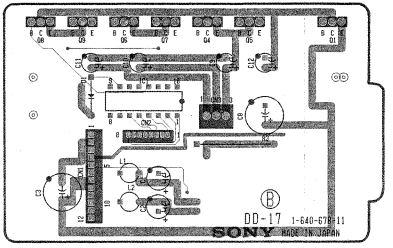

(1-640-678-11) B SIDE

DD-17 BOARD (
BVW-D75PS

CN1	C-2	A
CN2	B-2	A
CN3	B-1	A
D1	C-1	A
IC1	B-1	A
IC2	B-2	A
Q1	A-1	A
Q2	A-2	A
Q3	A-2	A
Q4	B-1	A
Q5	A-1	A
Q6	B-1	A
Q7	B-1	A
Q8	C-1	A
Q9	C-1	A

NOTE :
A : A Side
B : B Side

13-22

DD-17 BOARD (1-640-678-11)
BVW-D75PS

CN1	C-2	A
CN2	B-2	A
CN3	B-1	A
D1	C-1	A
IC1	B-1	A
IC2	B-2	A
Q1	A-1	A
Q2	A-2	A
Q3	A-2	A
Q4	B-1	A
Q5	A-1	A
Q6	B-1	A
Q7	B-1	A
Q8	C-1	A
Q9	C-1	A

NOTE :

A : A Side

B : B Side

13-22

RM-82, PTC-42/43/49/54/55, PD-56, DS-31, TR-73, DE-15, LP-57, PC-62, CL-25, AC-107 **FRAME WIRING**

RM-82 BOARD (1-640-166-11)

A Side

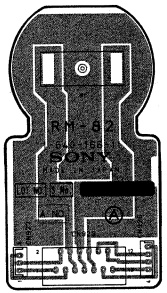

(1-640-166-11) A SIDE

PTC-49 BOARD (1-640-164-11)

A Side

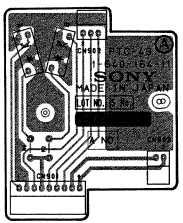

(1-640-164-11) A SIDE

PTC-54 BOARD (1-640-163-11)

A Side

(1-640-163-11) A SIDE

DS-31 BOARD (1-640-167-11)

A Side

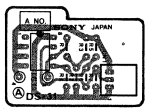

(1-640-167-11) A SIDE

PTC-55 BOARD (1-640-165-11)

A Side

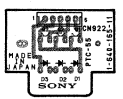

(1-640-165-11) A SIDE

DE-15 BOARD (1-622-606-12)

A Side

(1-622-606-12) A SIDE

PTC-42 BOARD (1-640-168-11)

A Side

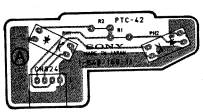

(1-640-168-11) A SIDE

PTC-43 BOARD (1-640-169-11)

A Side

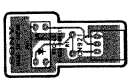

(1-640-169-11) A SIDE

PD-56 BOARD (1-640-162-11)

A Side

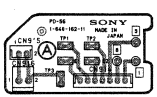

(1-640-162-11) A SIDE

TR-73 BOARD (1-640-161-11)

A Side

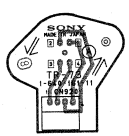

(1-640-161-11) A SIDE

13-23

RM-82, PTC-42/43/49/54/55, PD-56, DS-31, TR-73, DE-15, LP-57, PC-62, CL-25, AC-107 **FRAME WIRING**

LP-57 BOARD (1-640-172-11)

A Side

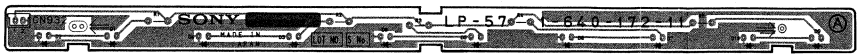

(1-640-172-11) A SIDE

PC-62 BOARD (1-640-171-11)

A Side

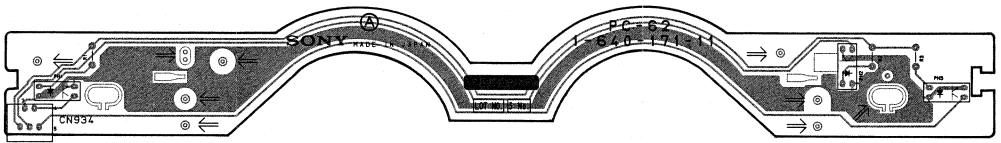

(1-640-171-11) A SIDE

CL-25 BOARD (1-640-170-12)

A Side

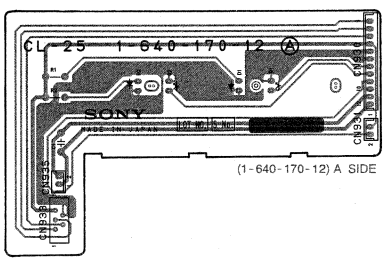

(1-640-170-12) A SIDE

AC-107 BOARD (1-640-676-11)

A Side

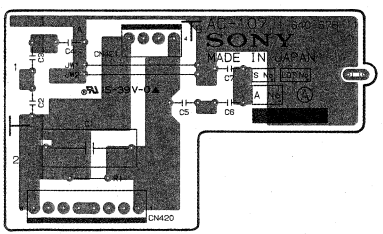

(1-640-676-11) A SIDE

13-23

KY-188D BOARD (1-633-813-11)

Side

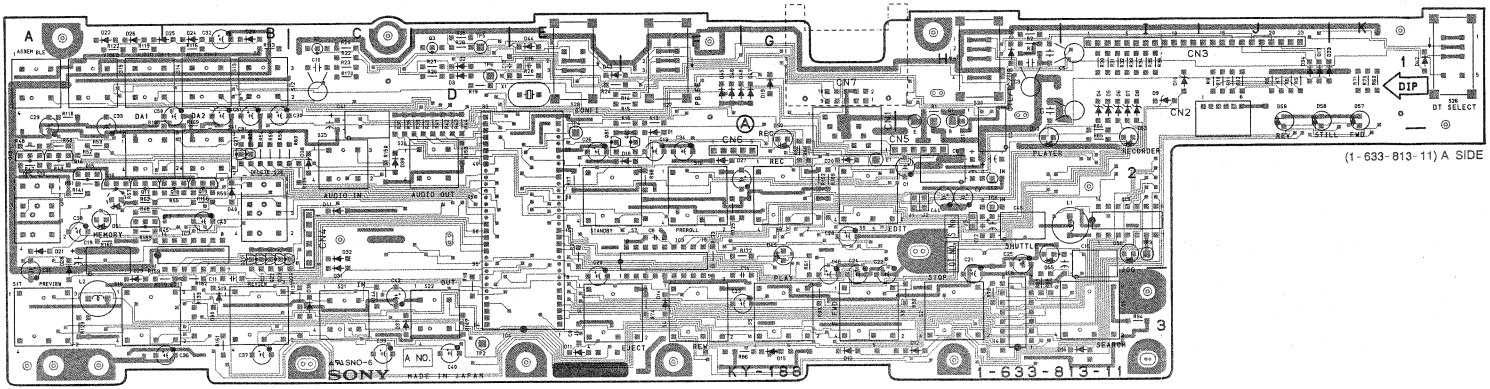

(1-633-813-11) A SIDE

Side

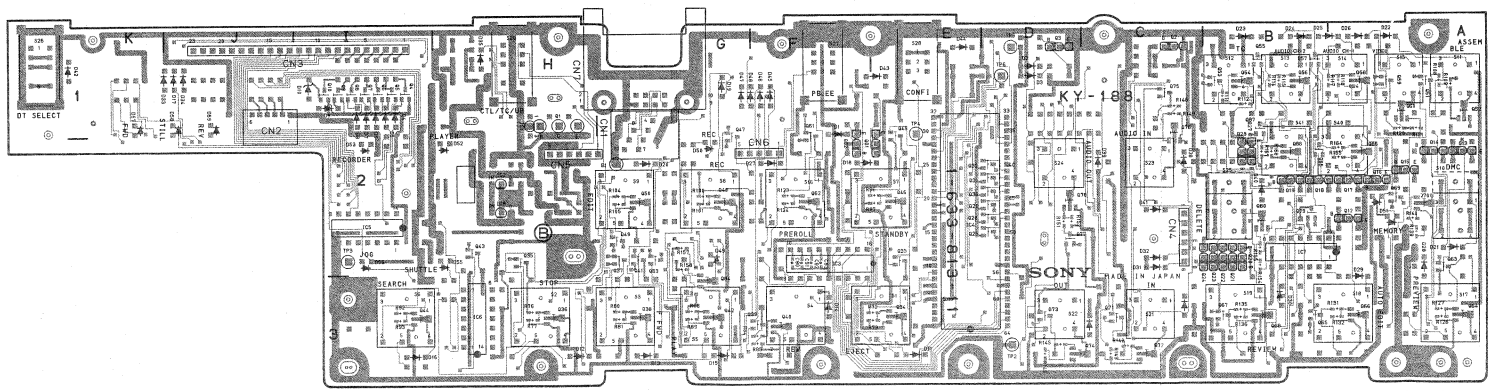

(1-633-813-11) B SIDE

13-24

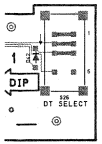

313-11) A SIDE

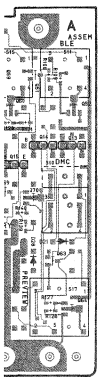

113-11) B SIDE

KY-188D BOARD (1-633-813-11)

BVW-D75PS

D1	F-1 A	D45	F-1 A	Q21	B-2 A	Q65	B-3 B	S24	C-2 A		
D2	D-1 A	D46	F-1 A	Q22	B-2 A	Q66	A-3 B	S25	B-2 A		
D3	D-1 A	D47	G-1 A	Q23	B-2 A	Q67	B-3 B	S26	K-1 A		
D4	I-1 A	D48	G-1 A	Q24	B-2 A	Q68	B-3 B	S27	F-1 A		
D5	I-1 A	D49	G-2 A	Q25	E-2 B	Q69	A-2 B	S28	E-1 A		
D6	I-1 A	D50	G-1 A	Q26	E-2 B	Q70	A-2 B				
D7	I-1 A	D51	A-2 A	Q27	B-2 A	Q71	C-3 B	TP2	D-3 A		
D8	I-1 A	D52	H-2 A	Q28	B-2 A	Q72	C-3 B	TP3	I-2 A		
D9	I-1 A	D53	I-2 A	Q29	E-2 B	Q73	D-3 B	TP4	E-1 A		
D10	I-1 A	D55	H-2 A	Q30	E-2 B	Q74	C-3 B	TP5	D-1 A		
D11	E-3 A	D56	I-2 A	Q31	E-2 B	Q75	C-1 B	TP6	D-1 A		
D12	H-3 A	D57	K-1 A	Q32	E-2 B	Q76	C-2 B				
D13	G-3 A	D58	J-1 A	Q33	E-2 B	Q77	D-2 B	X1	D-1 A		
D14	F-3 A	D59	J-1 A	Q34	E-3 B	Q78	D-2 B				
D15	G-3 A			Q35	H-2 B	Q79	B-2 B				
D16	I-3 A	E1	G-2 A	Q36	H-3 B	Q80	B-2 B				
D17	J-1 A			Q37	G-2 B	Q81	E-2 A				
D18	F-2 A	IC1	H-2 A	Q38	G-3 B	Q82	F-2 A				
D19	G-1 A	IC2	H-2 A	Q39	G-3 B	Q83	G-2 B				
D20	G-2 A	IC3	F-2 A	Q40	F-3 B	Q84	G-3 B				
D21	A-2 A	IC4	D-3 A	Q41	G-2 B						
D22	A-1 A	IC5	I-2 A	Q42	G-3 B	S1	E-3 A				
D23	B-1 A	IC6	H-3 A	Q43	H-2 B	S2	H-3 A				
D24	B-1 A	IC7	B-2 A	Q44	I-3 B	S3	H-3 A				
D25	B-1 A	IC8	H-2 A	Q45	E-1 B	S4	F-3 A				
D26	A-1 A			Q46	E-2 B	S5	G-3 A				
D27	F-2 A	Q2	C-1 A	Q47	G-1 B	S6	I-3 A				
D28	A-2 A	Q3	D-1 A	Q48	G-2 B	S7	F-2 A				
D29	A-2 A	Q4	I-1 B	Q49	G-2 B	S8	G-2 A				
D30	B-3 A	Q5	I-1 B	Q50	G-2 B	S9	G-2 A				
D31	C-2 A	Q6	I-1 B	Q51	A-1 B	S10	A-2 A				
D32	C-2 A	Q7	I-1 B	Q52	A-1 B	S11	A-1 A				
D33	J-1 A	Q8	I-1 B	Q53	B-1 B	S12	C-1 A				
D34	J-1 A	Q9	I-1 B	Q54	B-1 B	S13	B-1 A				
D35	H-1 A	Q10	I-1 B	Q55	B-1 B	S14	B-1 A				
D36	C-3 A	Q12	B-2 A	Q56	B-1 B	S15	A-1 A				
D37	C-3 A	Q13	A-2 A	Q57	B-1 B	S16	F-2 A				
D38	C-2 A	Q14	A-2 A	Q58	A-1 B	S17	A-3 A				
D39	C-2 A	Q15	A-2 A	Q59	A-1 B	S18	A-3 A				
D40	B-2 A	Q16	A-2 A	Q60	A-1 B	S19	B-3 A				
D41	C-2 A	Q17	A-2 A	Q61	F-1 B	S20	H-1 A				
D42	K-1 A	Q18	B-2 A	Q62	F-2 B	S21	C-3 A				
D43	E-1 A	Q19	B-2 A	Q63	A-2 B	S22	D-3 A				
D44	E-1 A	Q20	B-2 A	Q64	A-3 B	S23	C-2 A				

NOTE :

A : A Side

B : B Side

KY-205 BOARD (1-634-411-11)

A Side

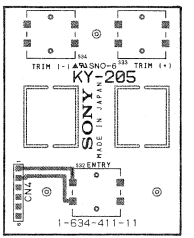

(1-634-411-11) A SIDE

B Side

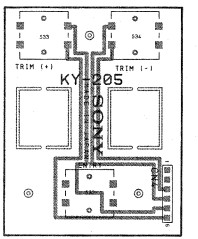

(1-634-411-11) B SIDE

KY-206 BOARD (1-634-412-11)

A Side

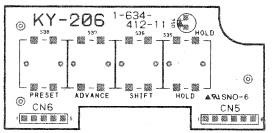

(1-634-412-11) A SIDE

B Side

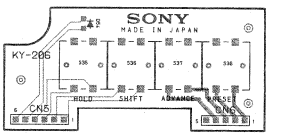

(1-634-412-11) B SIDE

DP-136 BOARD (1-634-413-11)

A Side

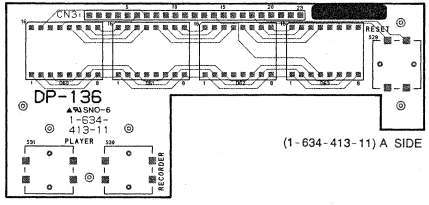

(1-634-413-11) A SIDE

B Side

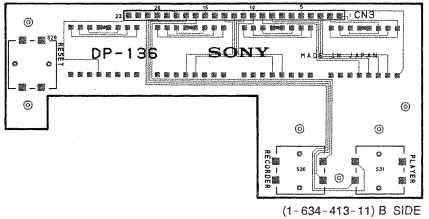

(1-634-413-11) B SIDE

PTC-39 BOARD (1-633-548-12)

A Side

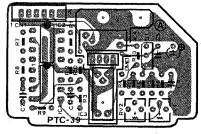

(1-633-548-12) A SIDE

B Side

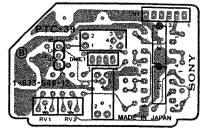

(1-633-548-12) B SIDE

PT-9 BOARD (1-605-018-11)

A Side

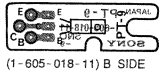

(1-605-018-11) B SIDE

PTC-39 BOARD (1-633-548-12)

A Side

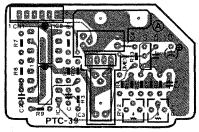

(1-633-548-12) A SIDE

B Side

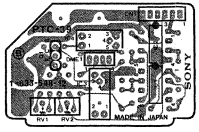

(1-633-548-12) B SIDE

PTC-39 BOARD (1-633-548-12)
BVW-D75PS

CN1	A-1	A
DME1	B-1	A
IC1	B-1	A
IC2	A-1	A
IC3	B-1	A
IC4	A-1	A
Q1	A-1	A
RV1	B-1	A
RV2	B-1	A

NOTE :
A : A Side
B : B Side

PT-9 BOARD (1-605-018-11)

A Side

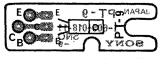

(1-605-018-11) B SIDE

SWC-12P BOARD

SWC-12P BOARD (1-640-691-11)

A Side

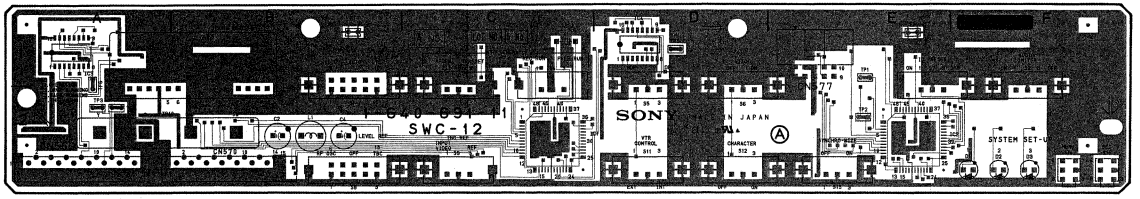

(1-640-691-11) A SIDE

B Side

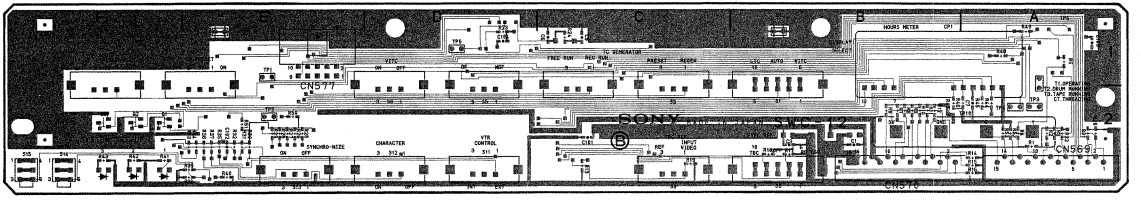

(1-640-691-11) B SIDE

SWC-1
BVW-D
CN569 A-2
CN570 B-2
CN577 E-2
CP1 B-1
D1 F-2
D2 F-2
D3 F-2
E1 B-1
E2 E-1
IC1 C-2
IC2 E-2
IC3 A-1
IC4 D-1
Q1 F-2
Q2 F-2
Q3 F-2
S1 B-2
S2 F-1
S3 C-1
S4 C-1
S6 D-2
S7 E-1
S8 B-2
S9 C-2
S11 D-2
S12 D-2
S13 E-2
S14 F-2
S15 F-2
TP1 E-1
TP2 E-2
TP3 A-2
TP4 A-2
TP5 D-1
TP6 A-2
TP10 A-2

NOTE :
A : A S
B : B S

13-26

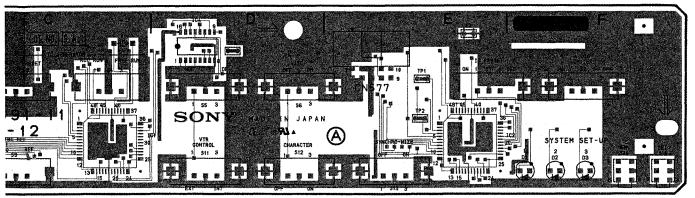

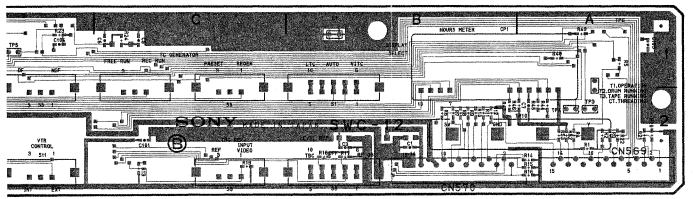

SWC-12P BOARD (1-640-691-11)
BVW-D75PS

CN569	A-2	A	X1	C-1	A
CN570	B-2	A			
CN577	E-2	A			
CP1	B-1	A			
D1	F-2	A			
D2	F-2	A			
D3	F-2	A			
E1	B-1	A			
E2	E-1	A			
IC1	C-2	A			
IC2	E-2	A			
IC3	A-1	A			
IC4	D-1	A			
Q1	F-2	B			
Q2	F-2	B			
Q3	F-2	B			
S1	B-2	A			
S2	F-1	A			
S3	C-1	A			
S4	C-1	A			
S6	D-2	A			
S7	E-1	A			
S8	B-2	A			
S9	C-2	A			
S11	D-2	A			
S12	D-2	A			
S13	E-2	A			
S14	F-2	A			
S15	F-2	A			
TP1	E-1	A			
TP2	E-2	A			
TP3	A-2	A			
TP4	A-2	A			
TP5	D-1	A			
TP6	A-2	A			
TP10	A-2	A			

NOTE :

A : A Side

B : B Side

13-26

MB-394 BOARD (1-640-677-11)

A Side

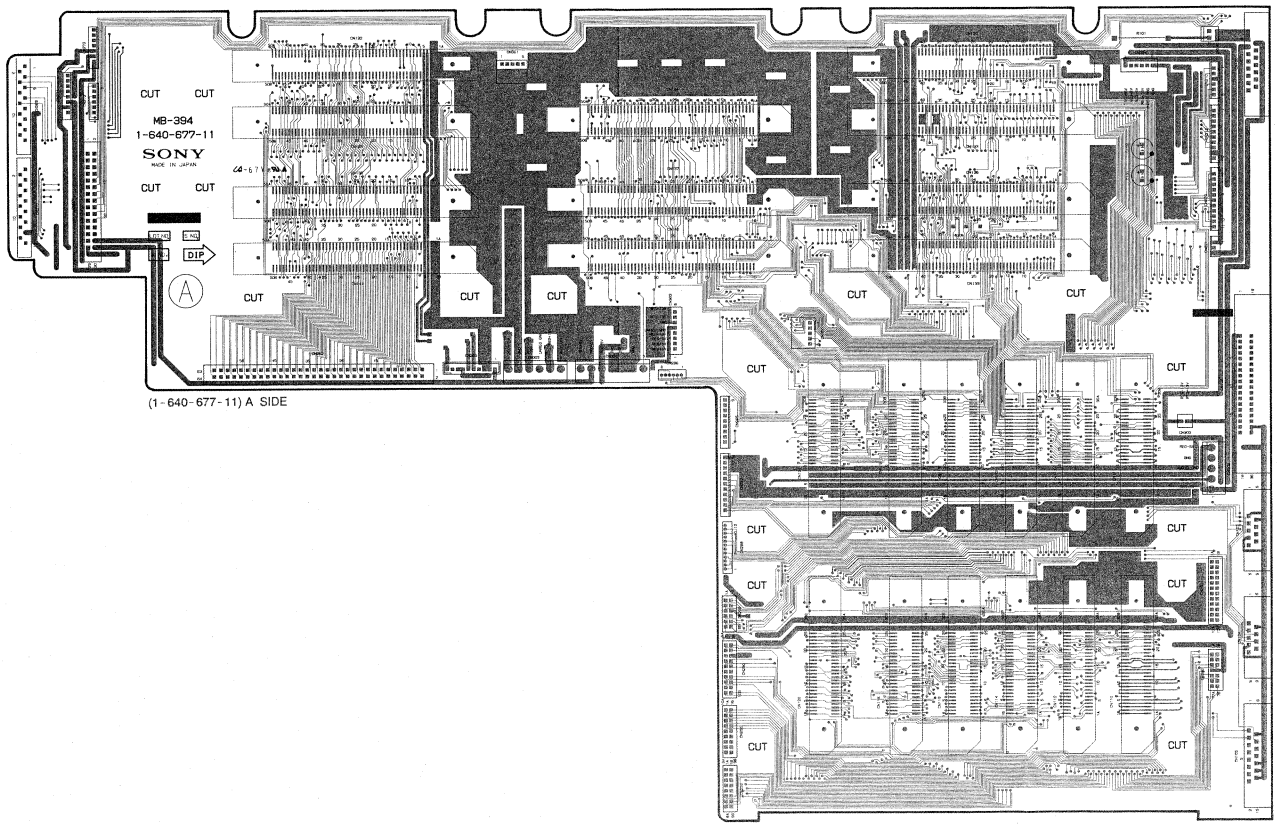

(1-640-677-11) A SIDE

13-27

MB-
BVW

CN2
CN3
CN4
CN100
CN102
CN103
CN104
CN105
CN110
CN111
CN112
CN113
CN114
CN115
CN116
CN117
CN118
CN119
CN120
CN121
CN130
CN132
CN133
CN134
CN135
CN136
CN137
CN138
CN139
CN140
CN141
CN210
CN212
CN220
CN221
CN230
CN231
CN240
CN250
CN252
CN255
CN258
CN260
CN262

NOTE
A : A
B : B

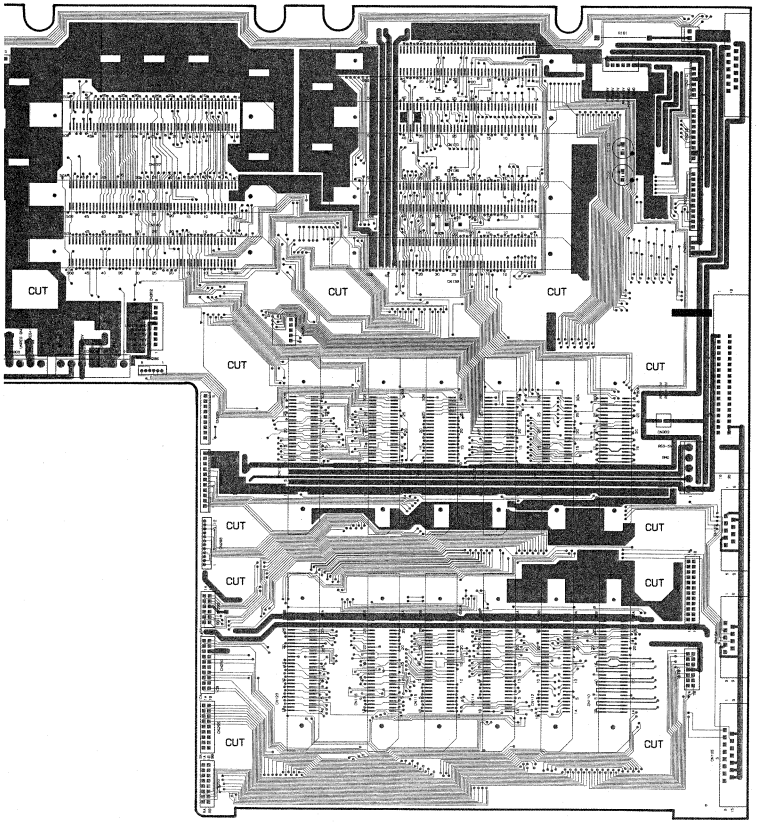

MB-394 BOARD(1-640-677-11)
BVW-D75PS

CN2	A-7	A	CN269	R-2	A
CN3	K-5	A	CN270	R-3	A
CN4	J-5	A	CN271	R-3	A
CN100	A-1	A	CN272	R-2	A
CN102	A-5	A	CN273	R-1	A
CN103	A-7	A	CN274	R-1	A
CN104	A-9	A	CN285	G-6	A
CN105	A-10	A	CN286	H-5	A
CN110	B-9	A	CN287	G-7	A
CN111	B-7	A	CN288	G-8	A
CN112	C-9	A	CN300	F-5	A
CN113	C-7	A	CN301	K-1	A
CN114	D-9	A	CN302	H-4	A
CN115	D-7	A	CN303	B-6	A
CN116	E-9	A	CN304	B-1	A
CN117	E-7	A			
CN118	E-9	A			
CN119	E-6	A			
CN120	F-9	A			
CN121	F-7	A			
CN130	D-1	A			
CN132	M-1	A			
CN133	D-2	A			
CN134	H-1	A			
CN135	M-2	A			
CN136	D-3	A			
CN137	H-3	A			
CN138	M-3	A			
CN139	D-4	A			
CN140	H-3	A			
CN141	M-4	A			
CN210	A-1	A			
CN212	A-2	A			
CN220	A-3	A			
CN221	A-3	A			
CN230	A-9	A			
CN231	A-8	A			
CN240	A-1	A			
CN250	G-9	A			
CN252	G-10	A			
CN255	G-10	A			
CN258	G-8	A			
CN260	K-5	A			
CN262	M-5	A			

NOTE :
A : A Side
B : B Side

MB-394 BOARD

MB-394 BOARD (1-640-677-11)

B Side

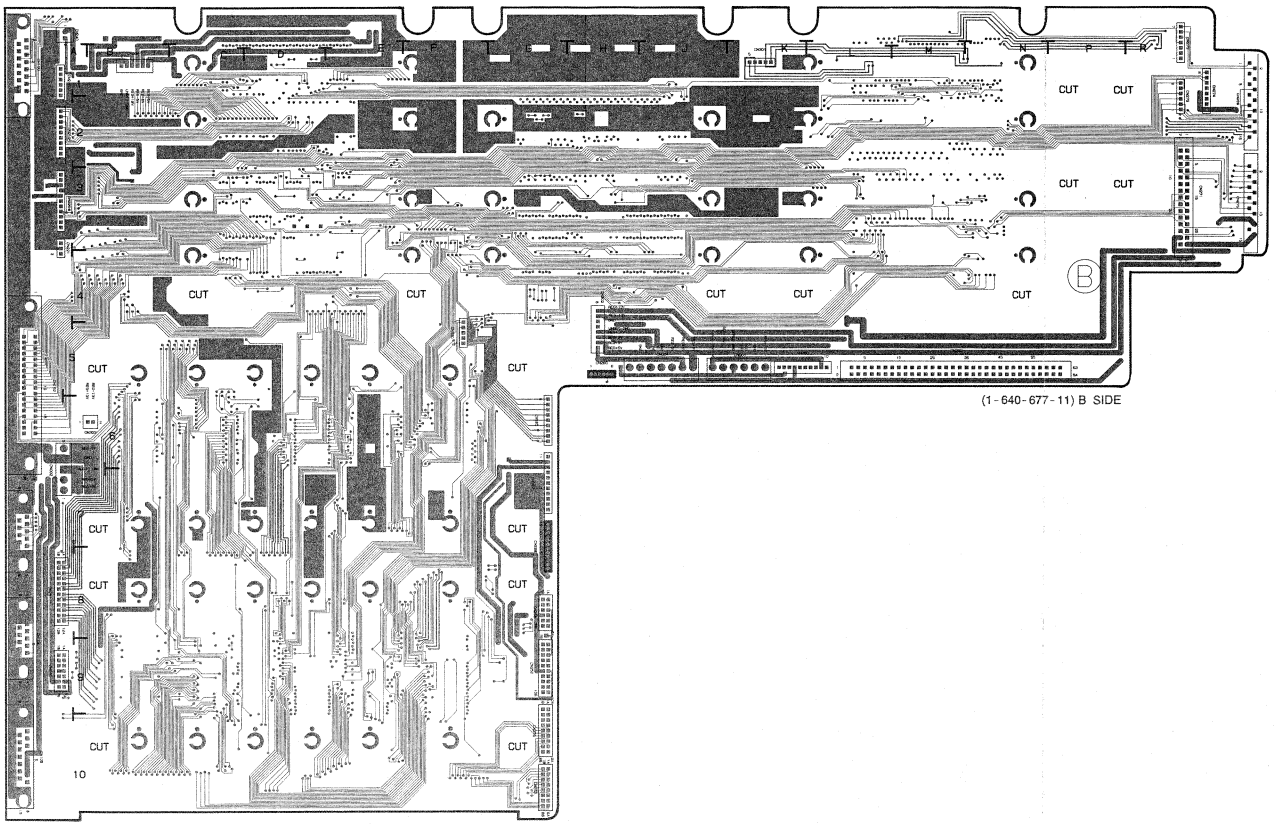

(1-640-677-11) B SIDE

MB-39
BVW-D

CN2	A-7
CN3	K-5
CN4	J-5
CN100	A-1
CN102	A-5
CN103	A-7
CN104	A-5
CN105	A-1
CN110	B-5
CN111	B-7
CN112	C-5
CN113	C-7
CN114	D-5
CN115	D-7
CN116	E-5
CN117	E-7
CN118	E-5
CN119	E-6
CN120	F-9
CN121	F-7
CN130	D-1
CN132	M-1
CN133	D-2
CN134	H-1
CN135	M-2
CN136	D-3
CN137	H-3
CN138	M-3
CN139	D-4
CN140	H-3
CN141	M-4
CN210	A-1
CN212	A-2
CN220	A-3
CN221	A-3
CN230	A-9
CN231	A-8
CN240	A-1
CN250	G-9
CN252	G-1
CN255	G-1
CN258	G-8
CN260	K-5
CN262	M-5

NOTE :
A : A
B : B

13-28

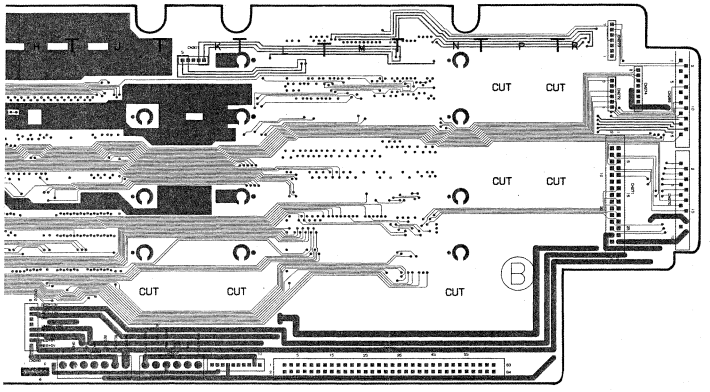

(1-640-677-11) B SIDE

MB-394 BOARD (1-640-677-11)
BVW-D75PS

CN2	A-7	A	CN269	R-2	A
CN3	K-5	A	CN270	R-3	A
CN4	J-5	A	CN271	R-3	A
CN100	A-1	A	CN272	R-2	A
CN102	A-5	A	CN273	R-1	A
CN103	A-7	A	CN274	R-1	A
CN104	A-9	A	CN285	G-6	A
CN105	A-10	A	CN286	H-5	A
CN110	B-9	A	CN287	G-7	A
CN111	B-7	A	CN288	G-8	A
CN112	C-9	A	CN300	F-5	A
CN113	C-7	A	CN301	K-1	A
CN114	D-9	A	CN302	H-4	A
CN115	D-7	A	CN303	B-6	A
CN116	E-9	A	CN304	B-1	A
CN117	E-7	A			
CN118	E-9	A			
CN119	E-6	A			
CN120	F-9	A			
CN121	F-7	A			
CN130	D-1	A			
CN132	M-1	A			
CN133	D-2	A			
CN134	H-1	A			
CN135	M-2	A			
CN136	D-3	A			
CN137	H-3	A			
CN138	M-3	A			
CN139	D-4	A			
CN140	H-3	A			
CN141	M-4	A			
CN210	A-1	A			
CN212	A-2	A			
CN220	A-3	A			
CN221	A-3	A			
CN230	A-9	A			
CN231	A-8	A			
CN240	A-1	A			
CN250	G-9	A			
CN252	G-10	A			
CN255	G-10	A			
CN258	G-8	A			
CN260	K-5	A			
CN262	M-5	A			

NOTE :

A : A Side

B : B Side

13-28

SECTION 14
SCHEMATIC DIAGRAM

CIRCUIT CONFIGURATION

The circuit information is provided below.

System	Board	Circuit function
VIDEO	MDM-5P	Modulator, Demodulator
	RP-53P	Video/Audio REC, PB Amplifier
	PA-109	DT Head Amplifier
	TBC-17P	A/D, D/A Memory, W/R Clock Generation
	CP-187	REF Video IN, Monitor OUT
	SWC-11	TBC PROC Control
	DIF-11P	S/P, P/S Converter, 4:2:2 DEC/ENC
	SIF-17	AES/EBU Decoder, Encoder
	DUS-359	Audio Amplifier
	DUS-490	Serial Input Amplifier
AUDIO	CP-175	Audio Input Amplifier
	CP-185	AES/EBU, I/O Buffer, TC Balanced Amplifier
	AFM-8	AFM Audio MOD/DEMOD
	AU-145	Audio Output Amplifier
	AU-146P	Audio PB Process
	AU-147P	Audio REC Process DOLBY-C
	DUS-465	T/C Insert Crosstalk Level ADJ.
	DUS-475	REC Mute
	HP-47	Headphones Amplifier
	VR-110	REC Level VR
	VR-111	PB Level VR
	DP-126	Level Meter
	DP-127	Level Meter
	DP-128	Level Meter
	DP-129	Level Meter
	SWC-10	Select Switch, Display
SERVO/ SYSTEM CONTROL	DP-156	RF Meter LED
	VR-119	Tracking Control VR
	SS-48DP	System Control, Drum/Capstan/Reel Servo
	EQ-42	Time Code Mute
	DT-28	Dynamic Tracking
	DT-29	Dynamic Tracking
	SR-52	Slip Ring
	DR-118B	Drum error Amplifier, Threading Motor Drive, Capstan/Reel Motor Drive, Top/End Sensor

System	Board	Circuit function
SERVO/ SYSTEM CONTROL	DD-17	Drum Motor Drive
	TR-73	Tension Regulator Tension Detection
	RM-82	Reel Motor
	DE-15	Reel FG
	PD-56	Pinch Plunger
	DS-31	Dew (Condensation) Sensor
	PTC-42	Reel Base Large/Small Detection
	PTC-43	REC Inhibit
	PTC-49	Threading End Detection
	PTC-54	Loading Motor Pulse Detection
	PTC-55	Cassette Data Detection
	CL-25	Cassete Down Detection, Up-Down Motor
	LP-57	Cassette Up Compartment Lamp
	PC-62	Cassette-in Detection, Large/Small Cassette Detection
	KY-188D	Keyboard
	KY-205	Keyboard
	KY-206	Keyboard
	DP-136	Time Counter Display
	PTC-39	Search Dial
	PT-9	Power Transistor
	SWC-12P	Hours Meter, Menu Setup
OTHERS	AC-107	Power Supply
	MB-394	Mother Board

MDM-5P BOARD (1/8)

Modulator, Demodulator

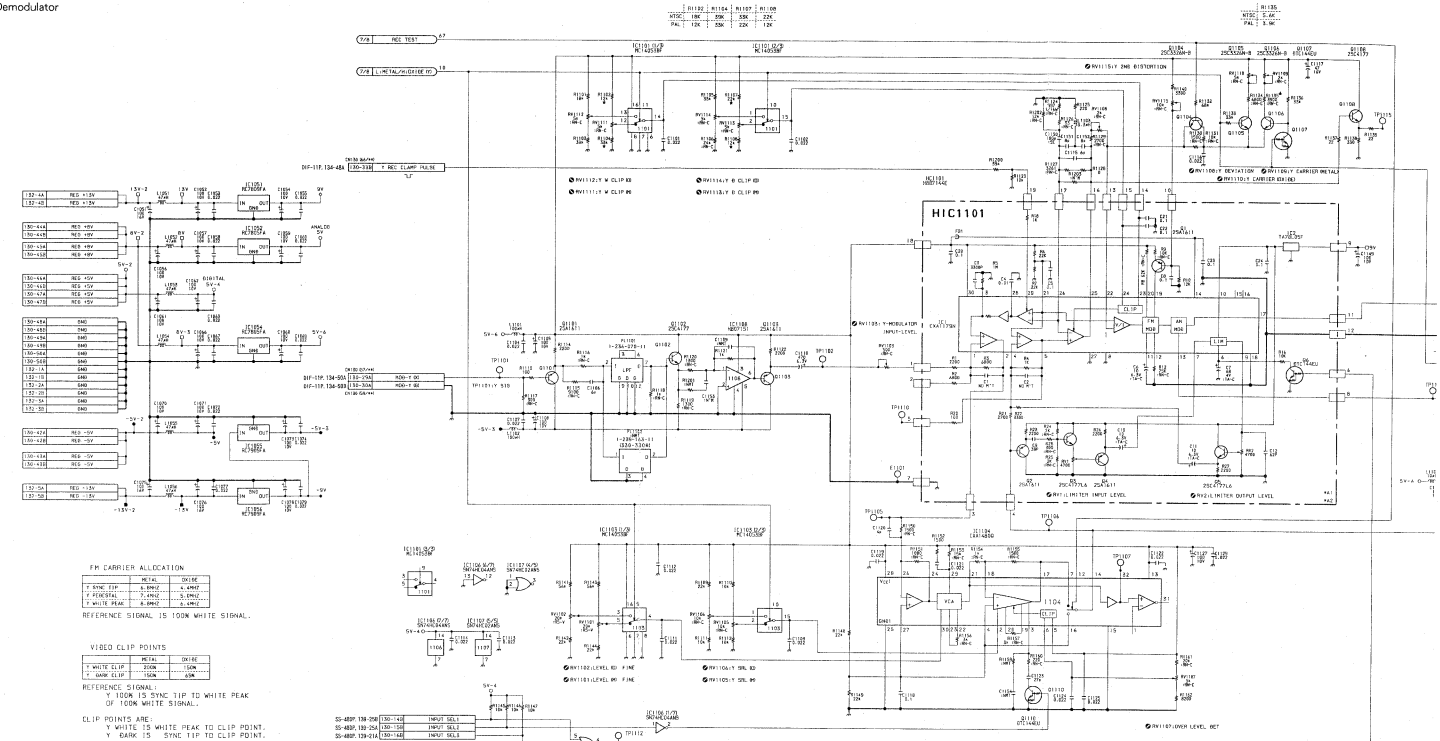

MDM-5P BOARD **(1/8)**

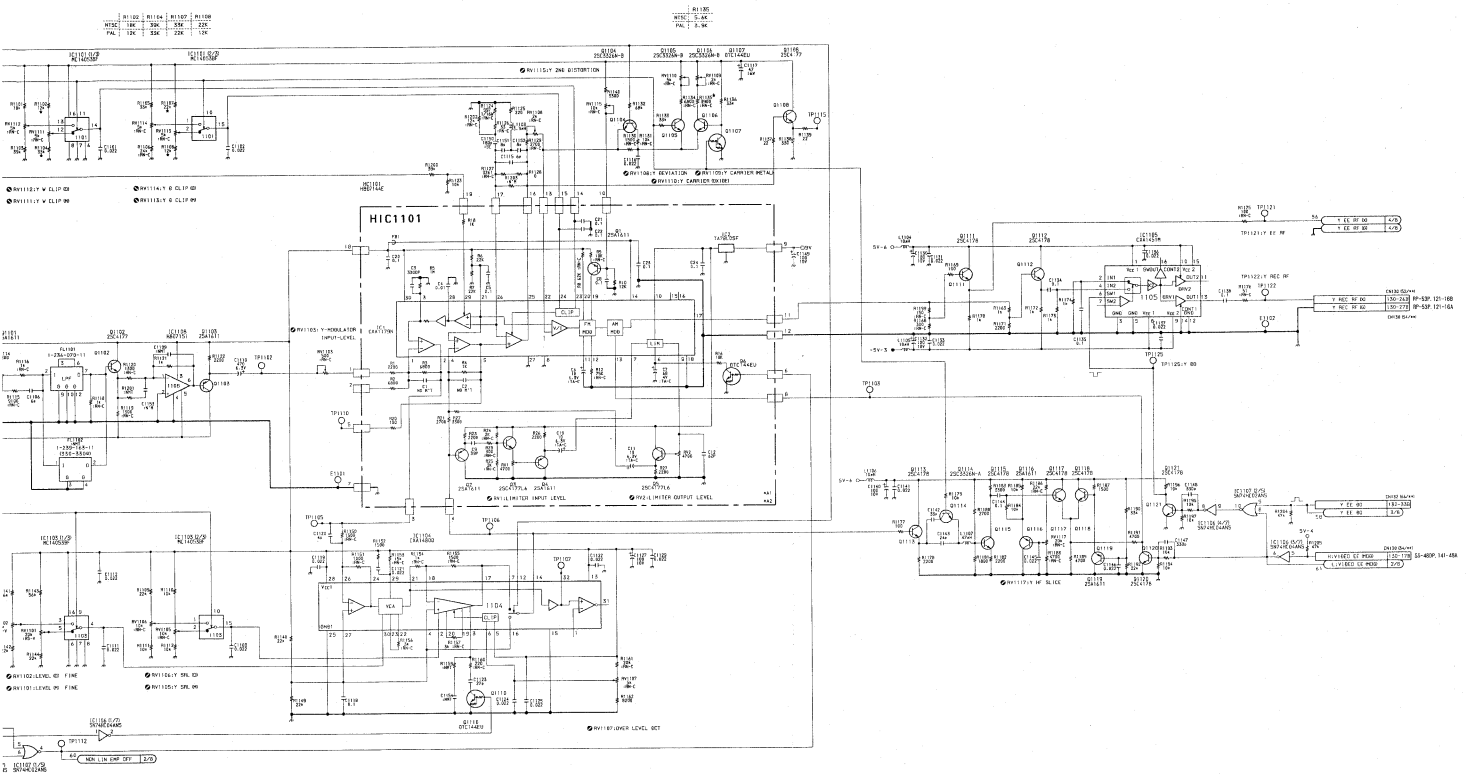

MDM-5P BOARD (2/8)
Modulator, Demodulator

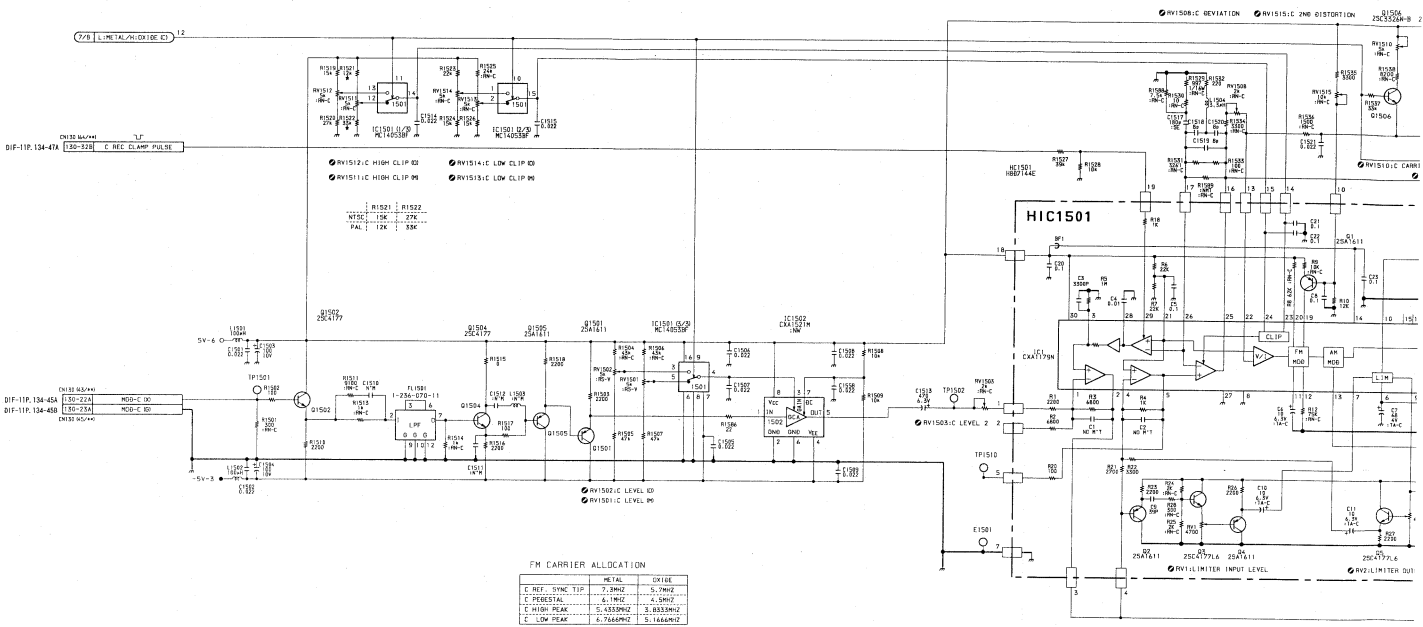

FM CARRIER ALLOCATION

	METAL	OXIDE
C REF. SYNC TIP	7.3MHZ	5.7MHZ
C PEDESTAL	6.1MHZ	4.5MHZ
C HIGH PEAK	5.4333MHZ	3.8333MHZ
C LOW PEAK	6.7666MHZ	5.1666MHZ

REFERENCE SIGNAL IS 100% COLOR BARS SIGNAL.

VIDEO CLIP POINTS

	METAL	OXIDE
C HIGH CLIP	285%	225%
C LOW CLIP	195%	150%

REFERENCE SIGNAL:
C 100% IS HIGH PEAK TO LOW PEAK
OF 100% COLOR BARS SIGNAL.

CLIP POINT IS PEDESTAL LINE TO CLIP POINT.

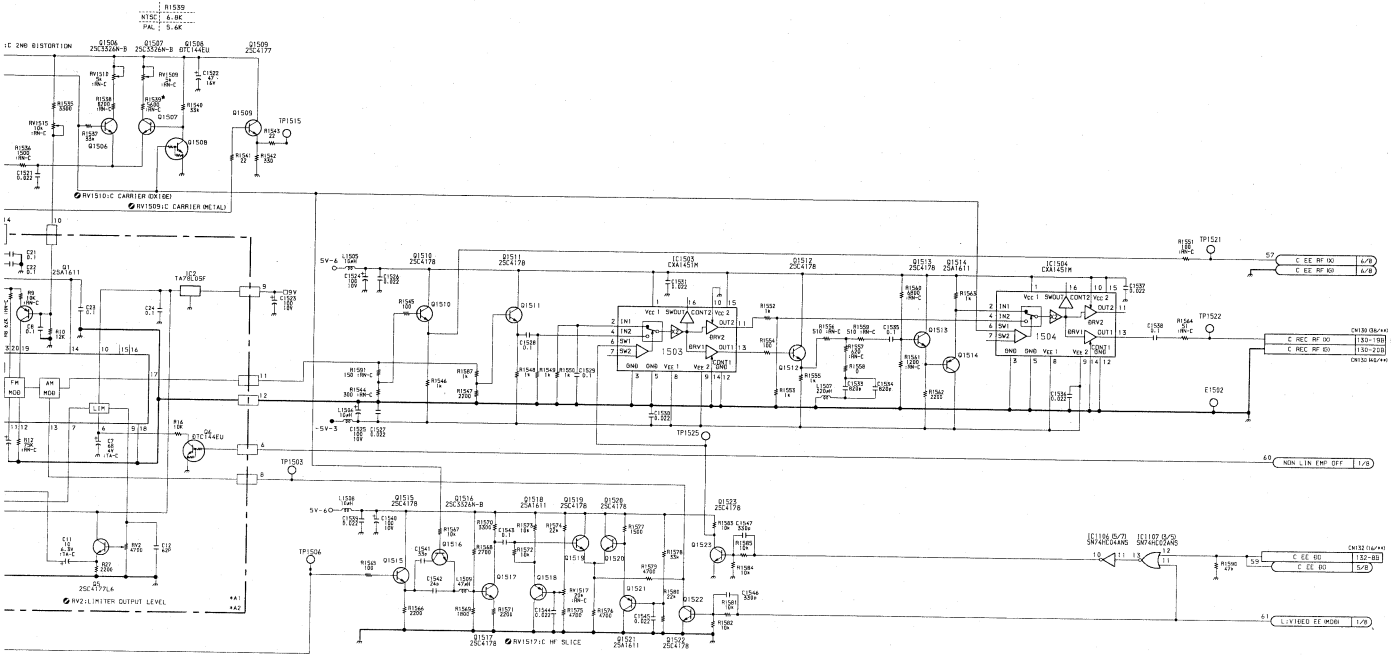

MDM-5P BOARD **(2/8)**

1-640-688-11
BVW-D75PS : # 10001-

MDM-5P BOARD (3/8)
Modulator, Demodulator

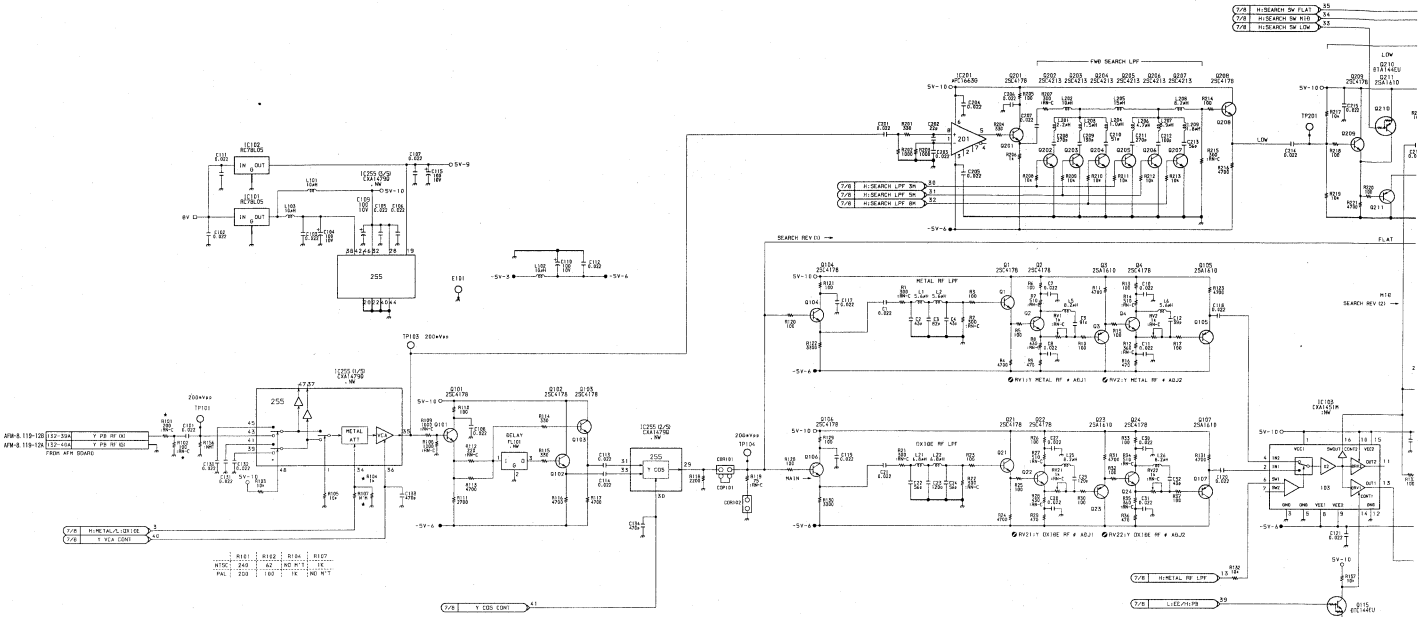

MDM-5P BOARD (3/8)

SEARCH SWITCH

TAPE	SPEED	LOW	MID	HIGH
METAL	+42 ~ +18	H	L	L
	+16 ~ +5	L	H	L
	+5 ~ -5	L	L	L
	-5 ~ -30	L	H	L
	-50 ~ -42	L	L	H
OXIDE	+42 ~ +5	H	L	L
	+5 ~ -5	L	L	L
	-5 ~ -42	L	H	L

SEARCH TUNE

TAPE	SPEED	3MHz	4MHz	5MHz
METAL	+42 ~ +36	H	L	L
	+36 ~ +5	L	H	L
	+5 ~ -5	L	L	L
	-5 ~ -42	L	H	L
OXIDE	+42 ~ +36	H	L	L
	+36 ~ +18	L	H	L
	+18 ~ +5	L	L	H
	+5 ~ -5	L	L	L
	-5 ~ -42	L	L	H

MDM-5P BOARD (3/8)

1-640-686-11
BVW-D75PS : # 10001-

14-7

MDM-5P BOARD (4/8)
Modulator, Demodulator

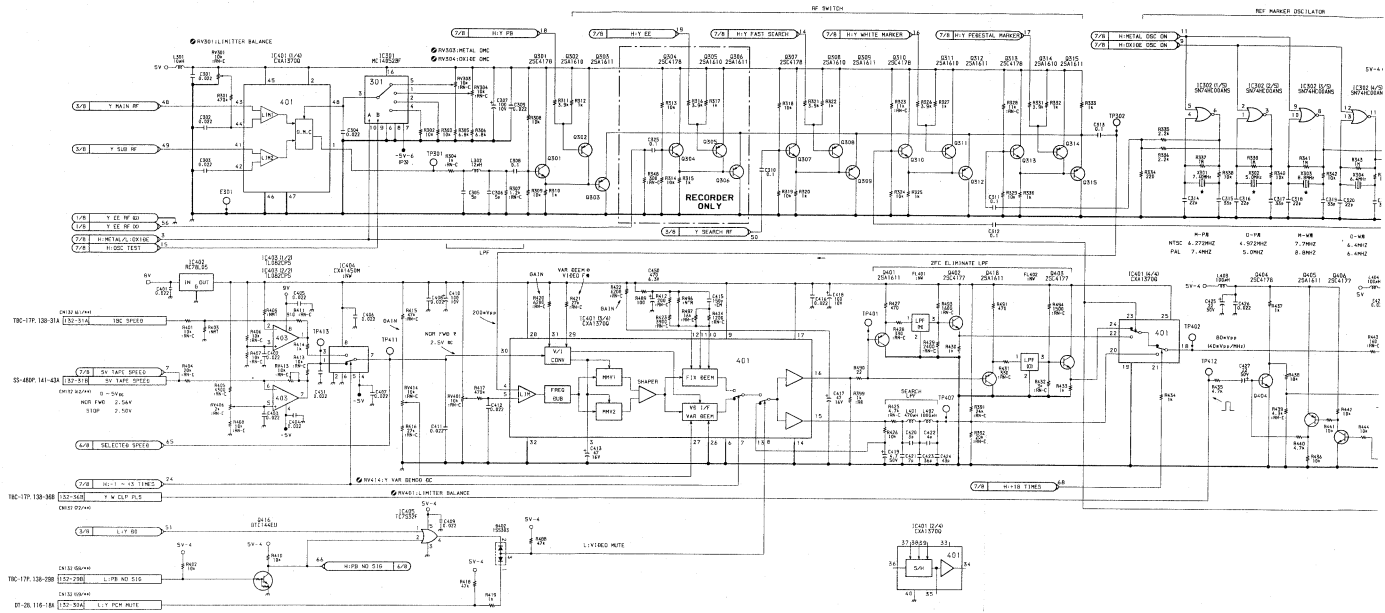

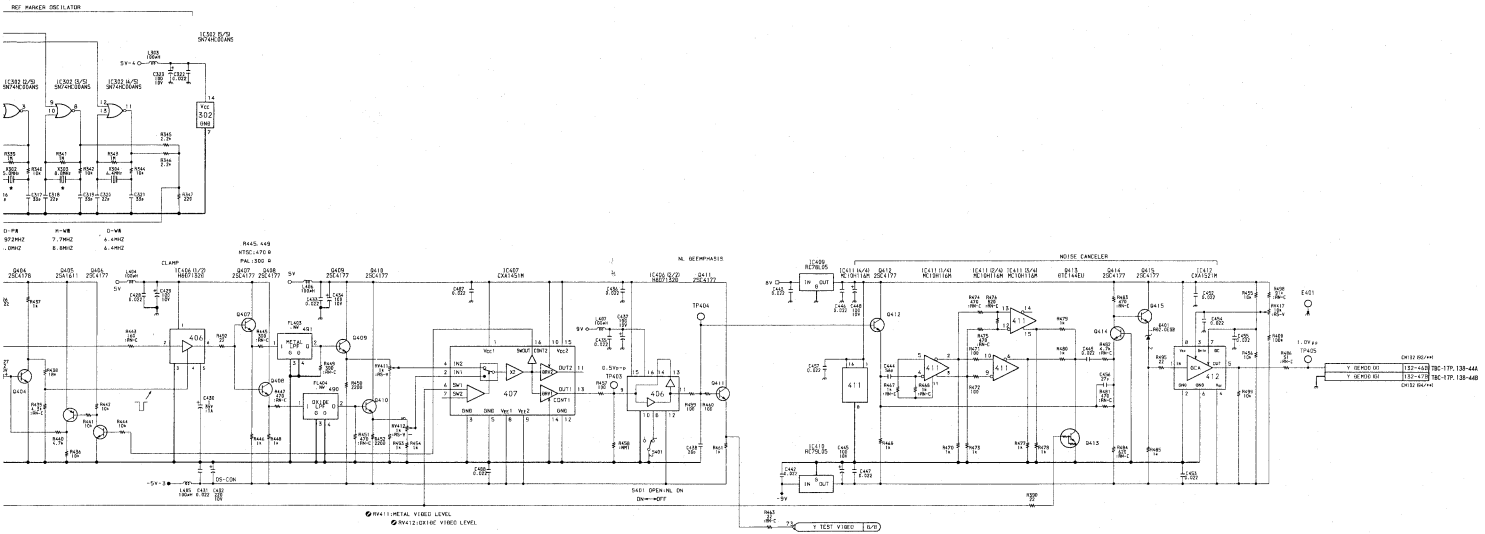

MDM-5P BOARD **(4/8)**

1-640-688-11
BVW-D75PS : # 10001-

MDM-5P BOARD (5/8)
Modulator, Demodulator

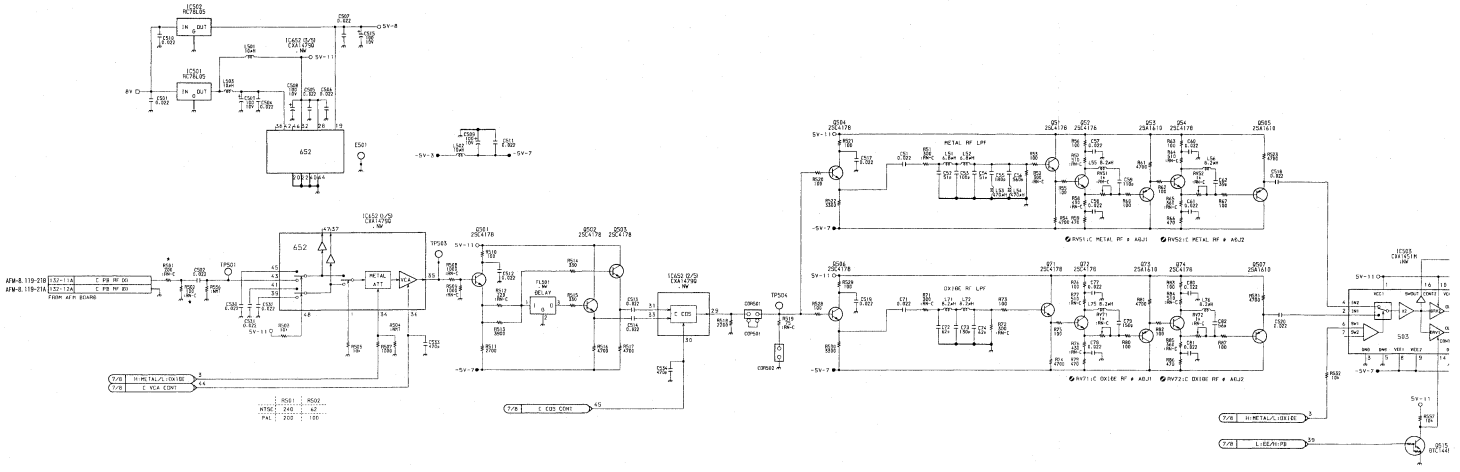

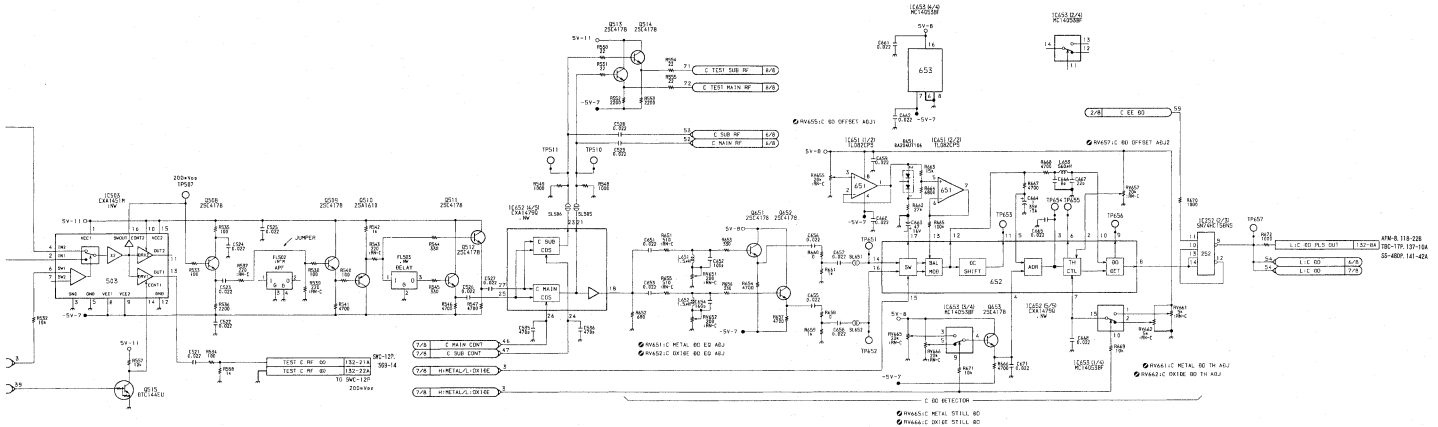

MDM-5P BOARD **(5/8)**

1-640-688-11
BVW-D75PS : # 10001-

MDM-5P BOARD (6/8)
Modulator, Demodulator

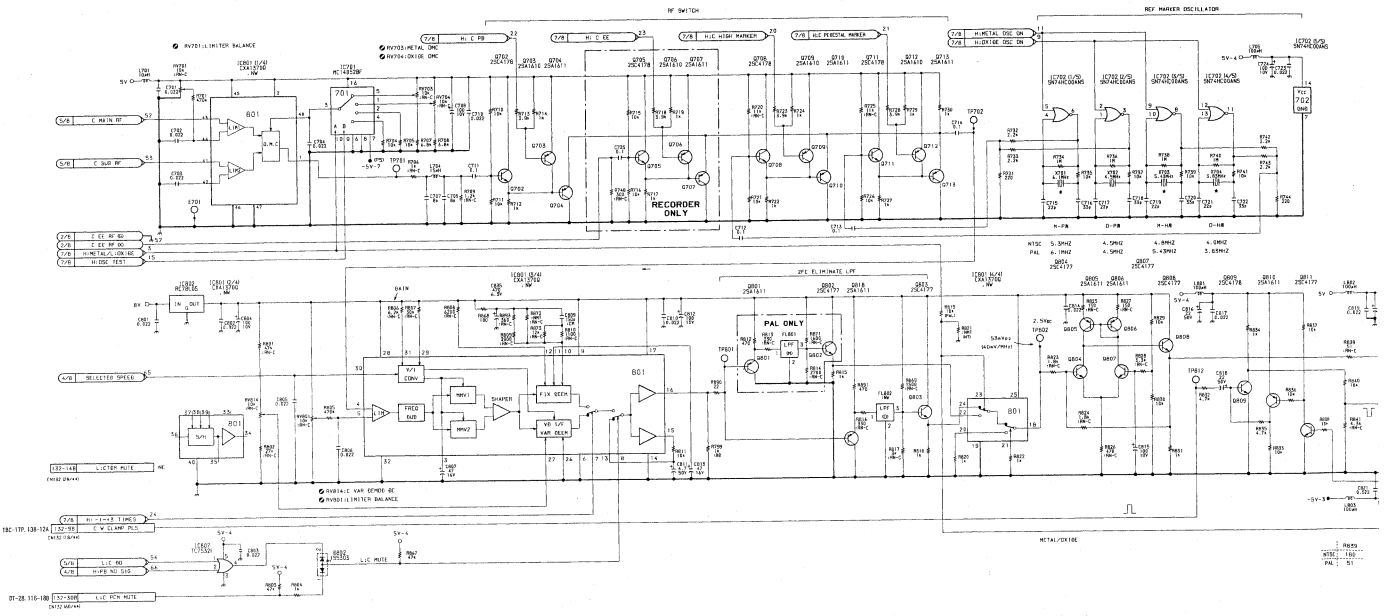

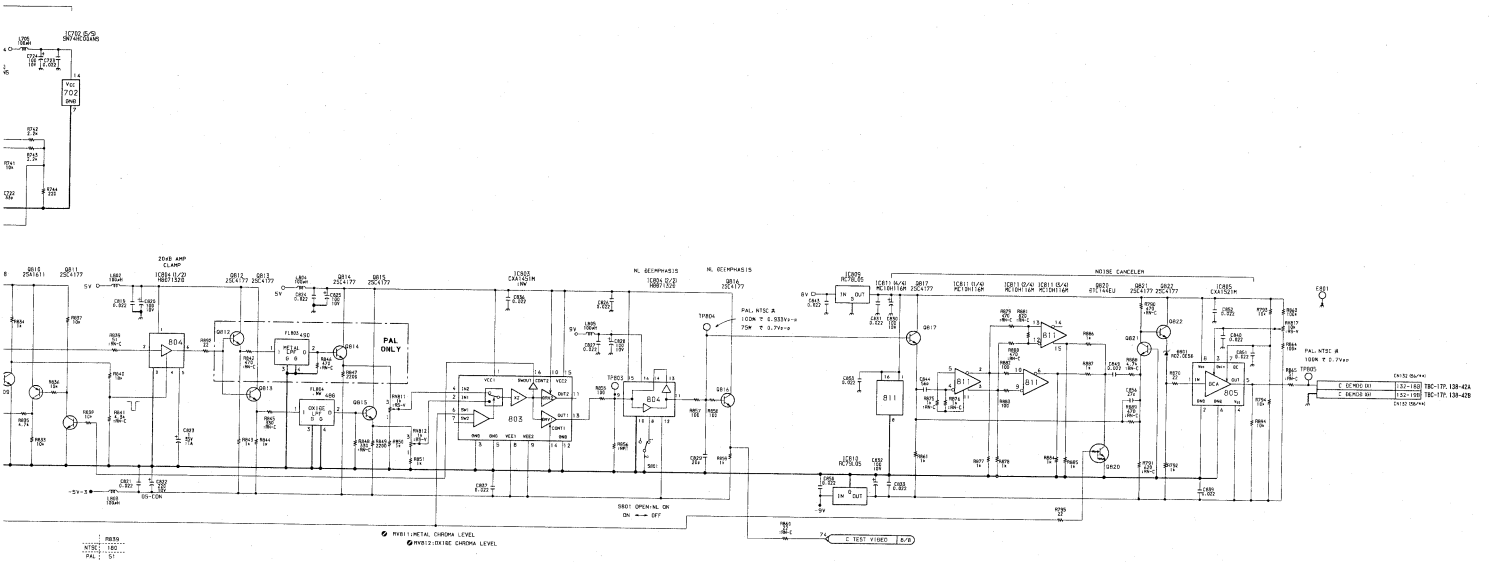

MDM-5P BOARD (6/8)

1-640-688-11
BVW-D75PS ; #10001-

14-13

MDM-5P BOARD (7/8)
Modulator, Demodulator

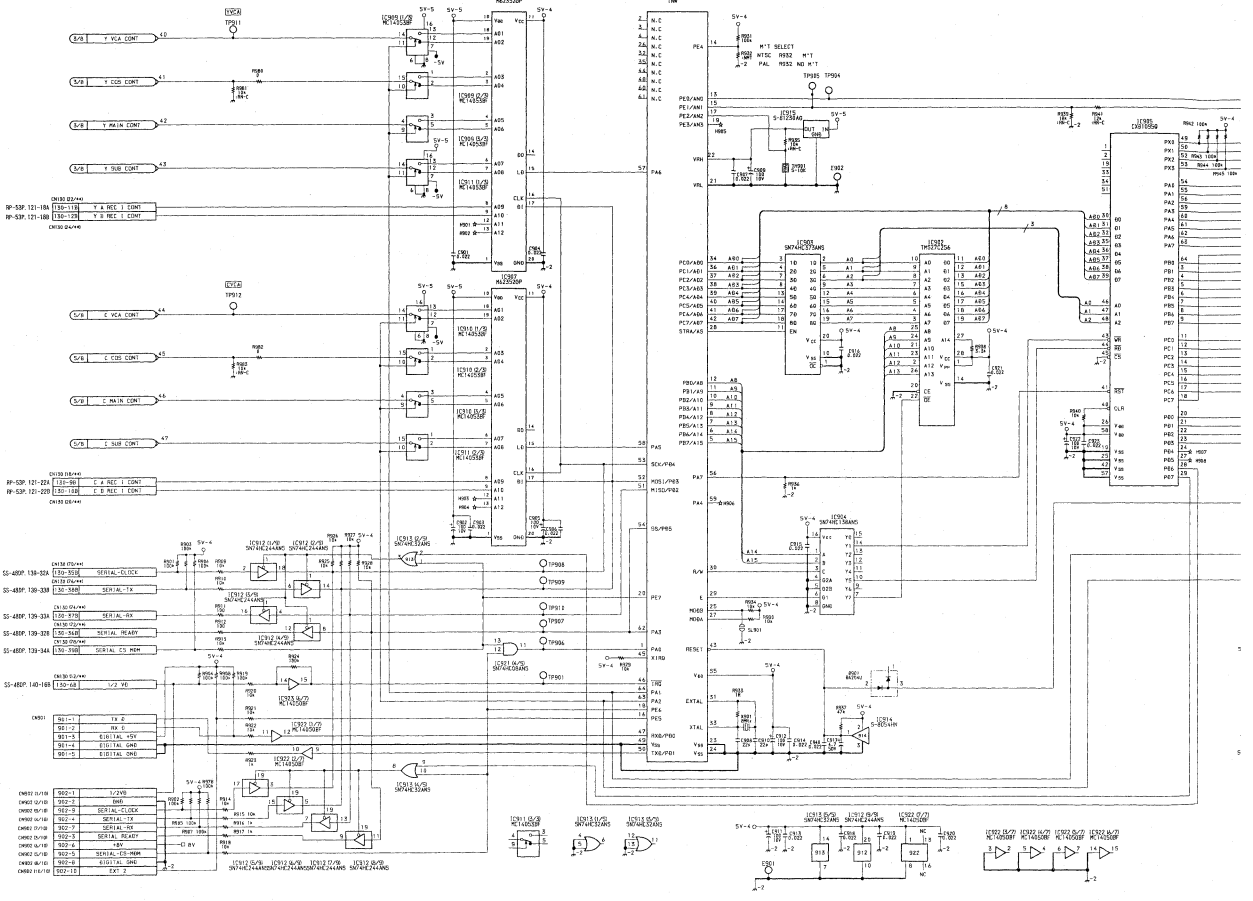

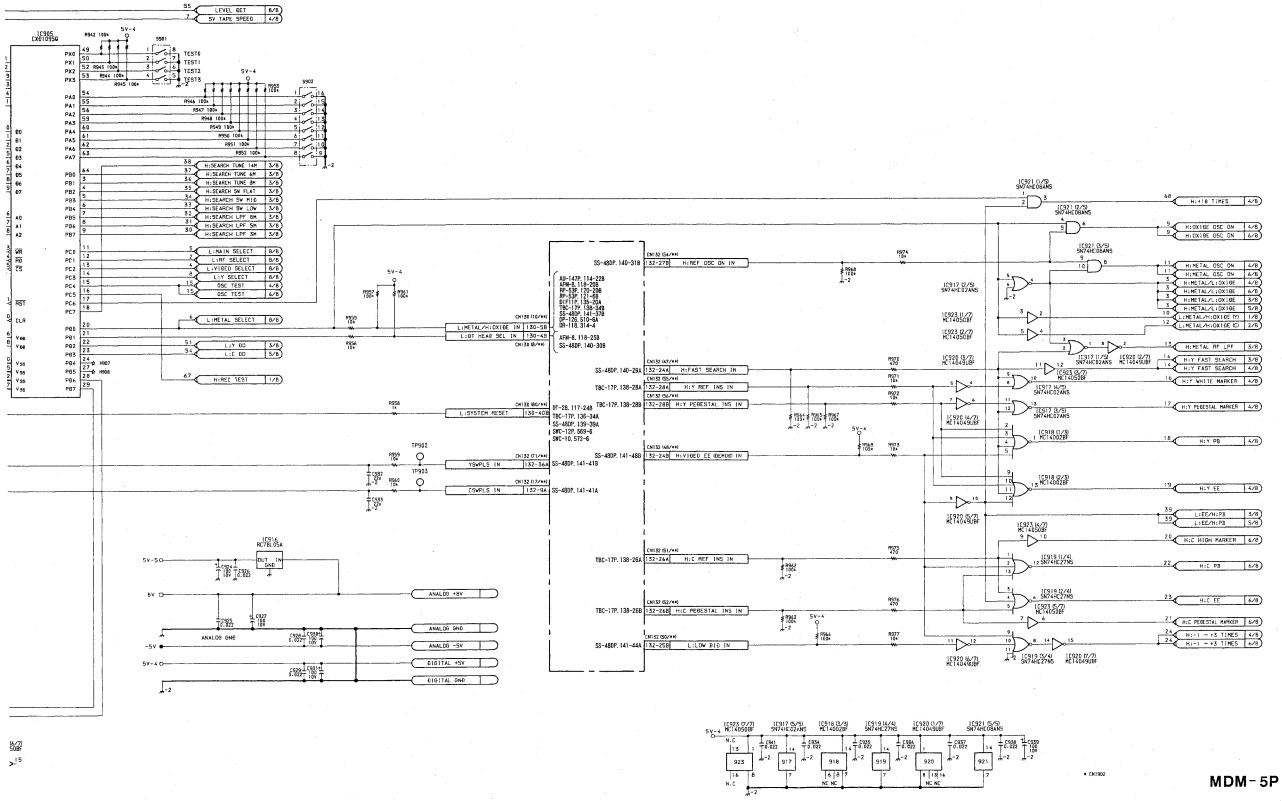

MDM-5P BOARD (7/8)

1-640-688-11
BVW-D75PS : #10001-

MDM-5P BOARD (8/8)

Modulator, Demodulator

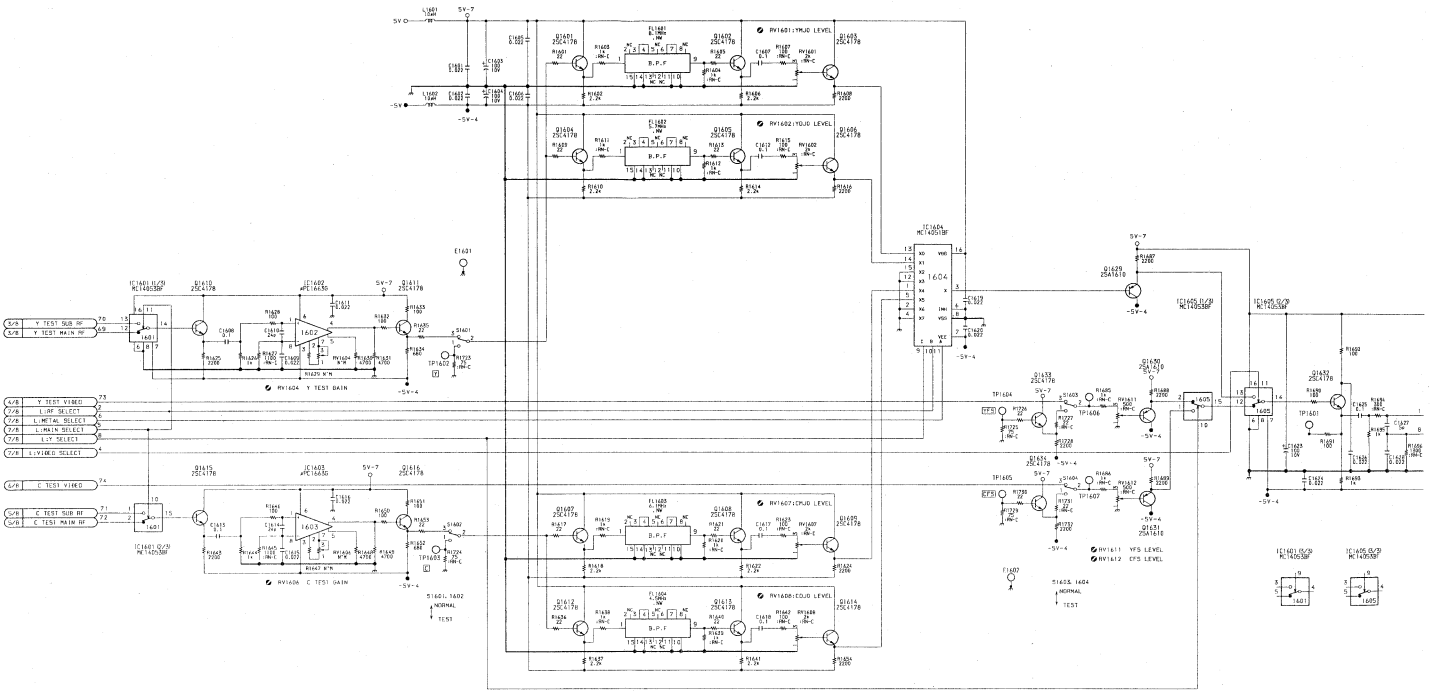

MDM-5P BOARD (8/8)

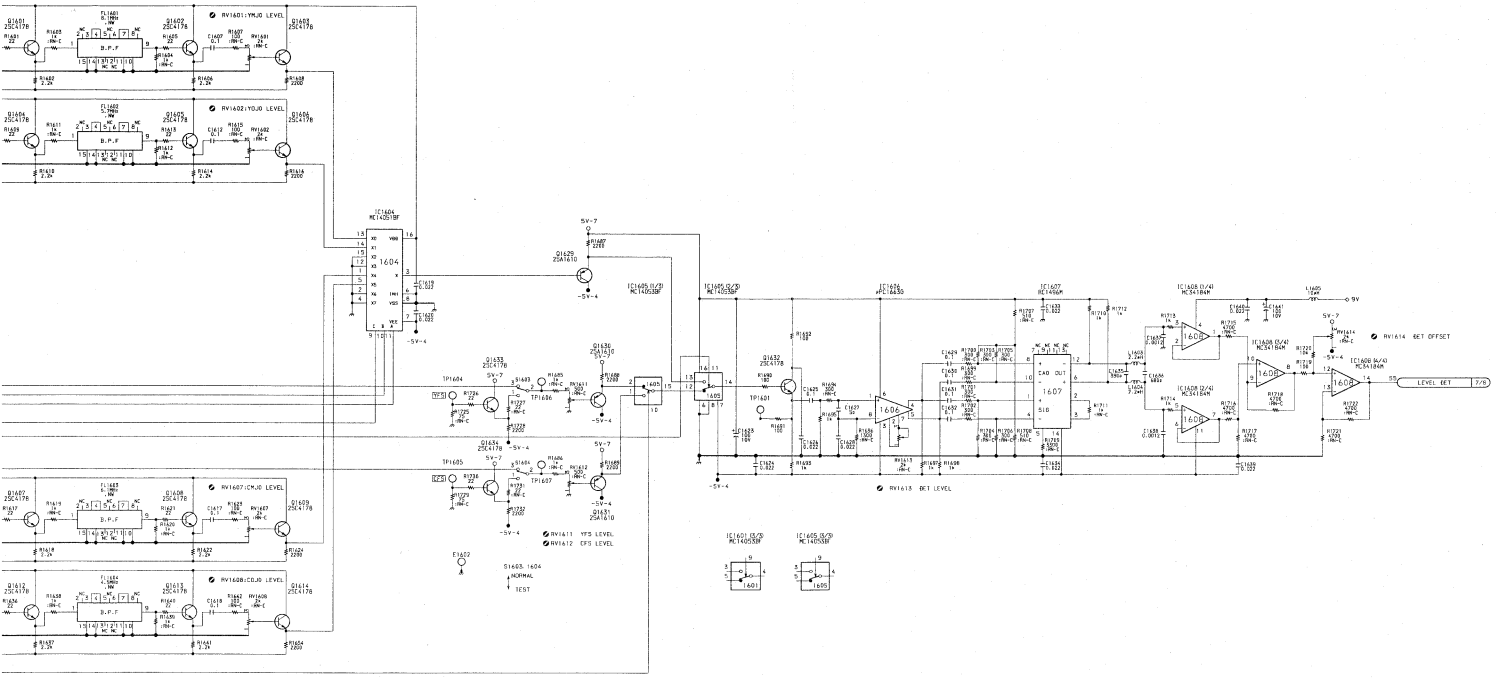

MDM-5P BOARD (8/8)

1-640-686-11
BVW-D75PS ; # 10001-

RP-53P BOARD (1/5)

Video/Audio Recording, Playback Amplifier

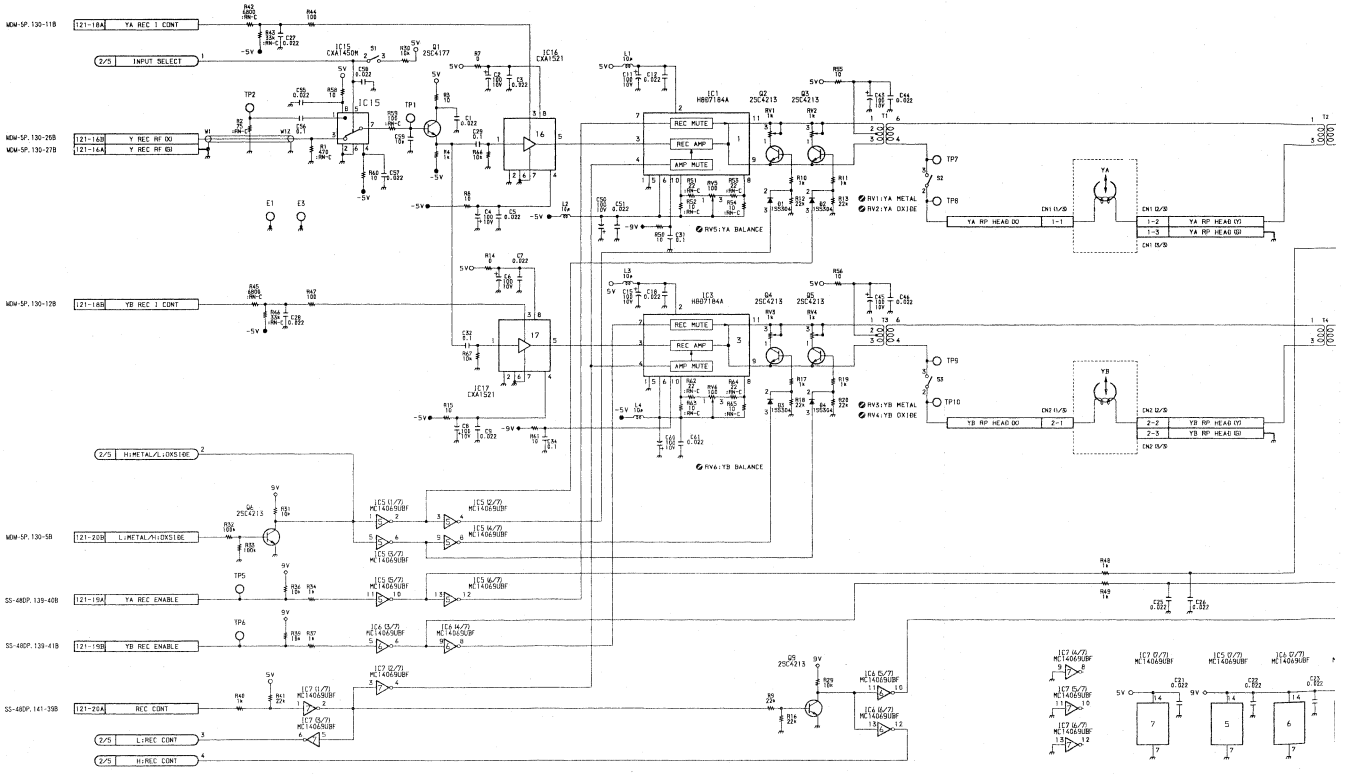

RP-53P BOARD (1/5)

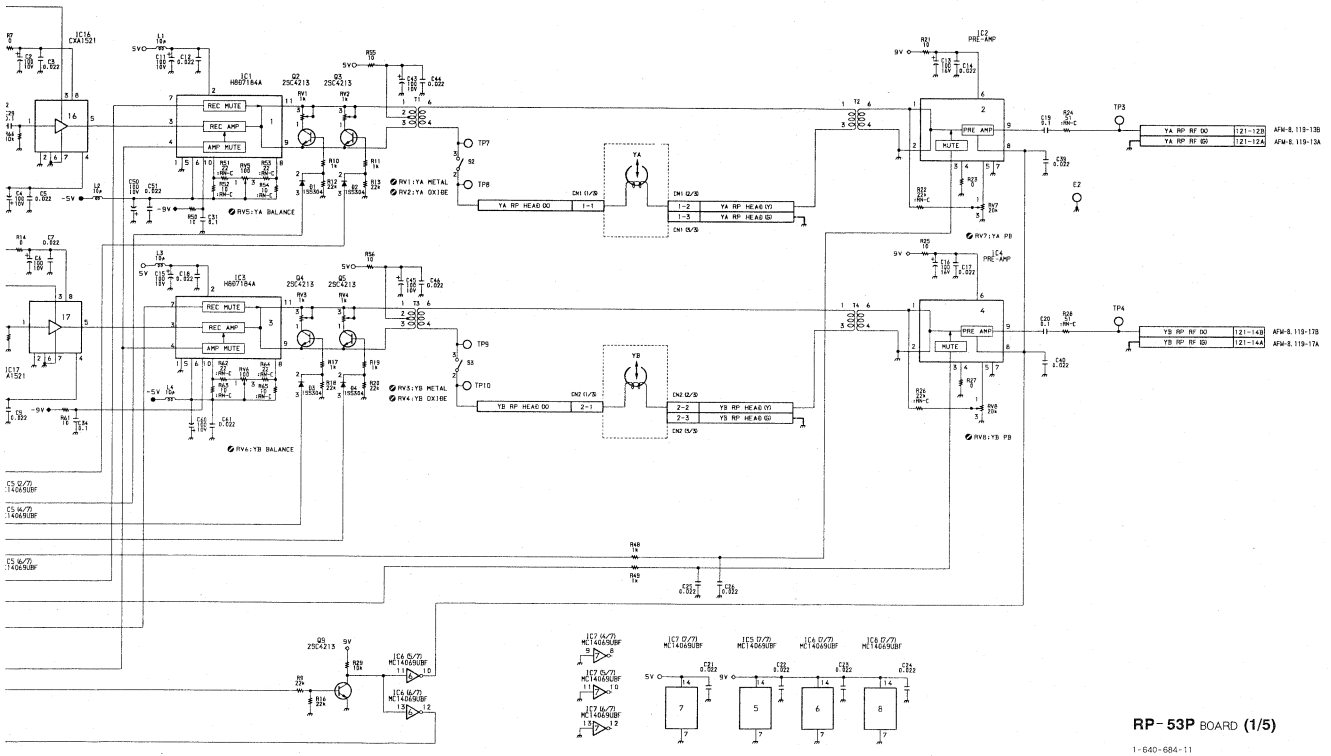

RP-53P BOARD (1/5)

1-640-684-11
8VW-D7SPS : # 10001-

RP-53P BOARD (2/5)

Video/Audio Recording, Playback Amplifier

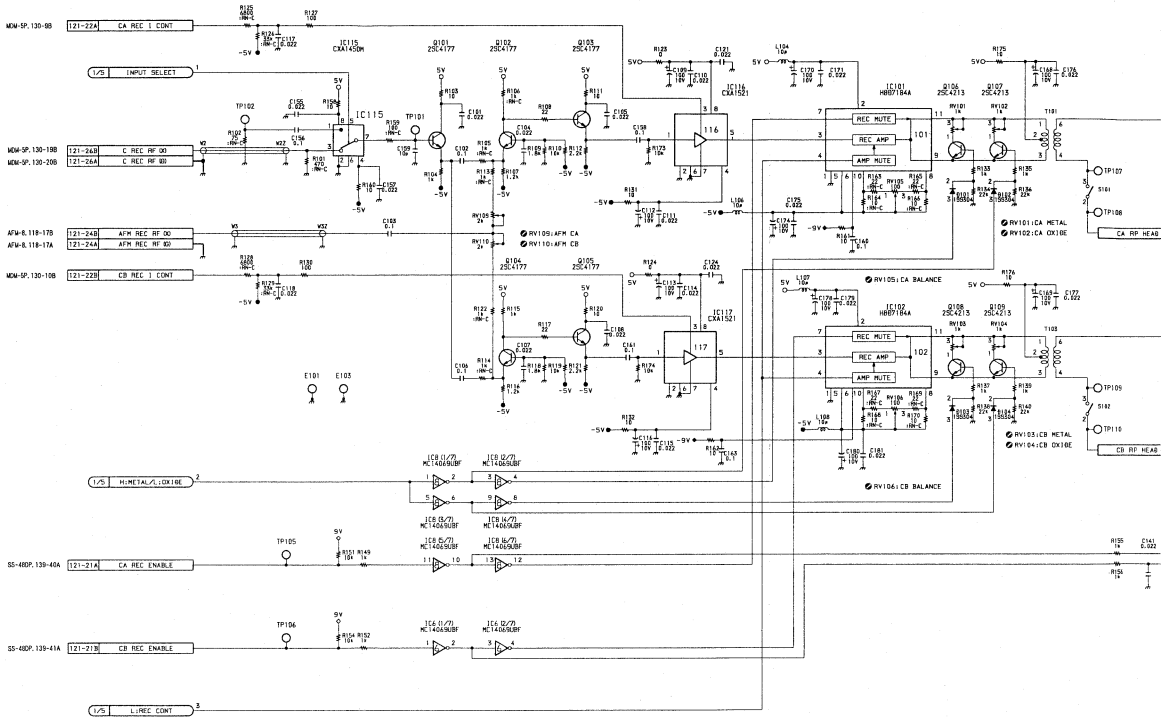

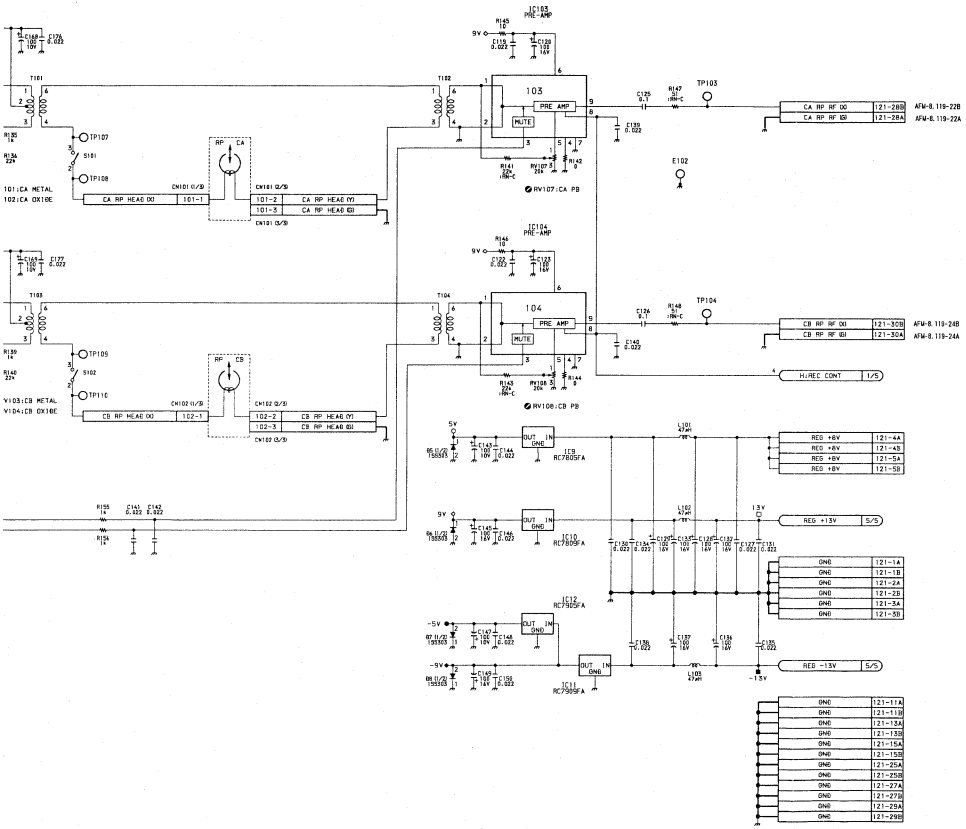

RP-53P BOARD **(2/5)**

1-640-684-11
BVW-D75PS ; # 10001-

14-21

RP-53P BOARD (3/5)

Video/Audio Recording, Playback Amplifier

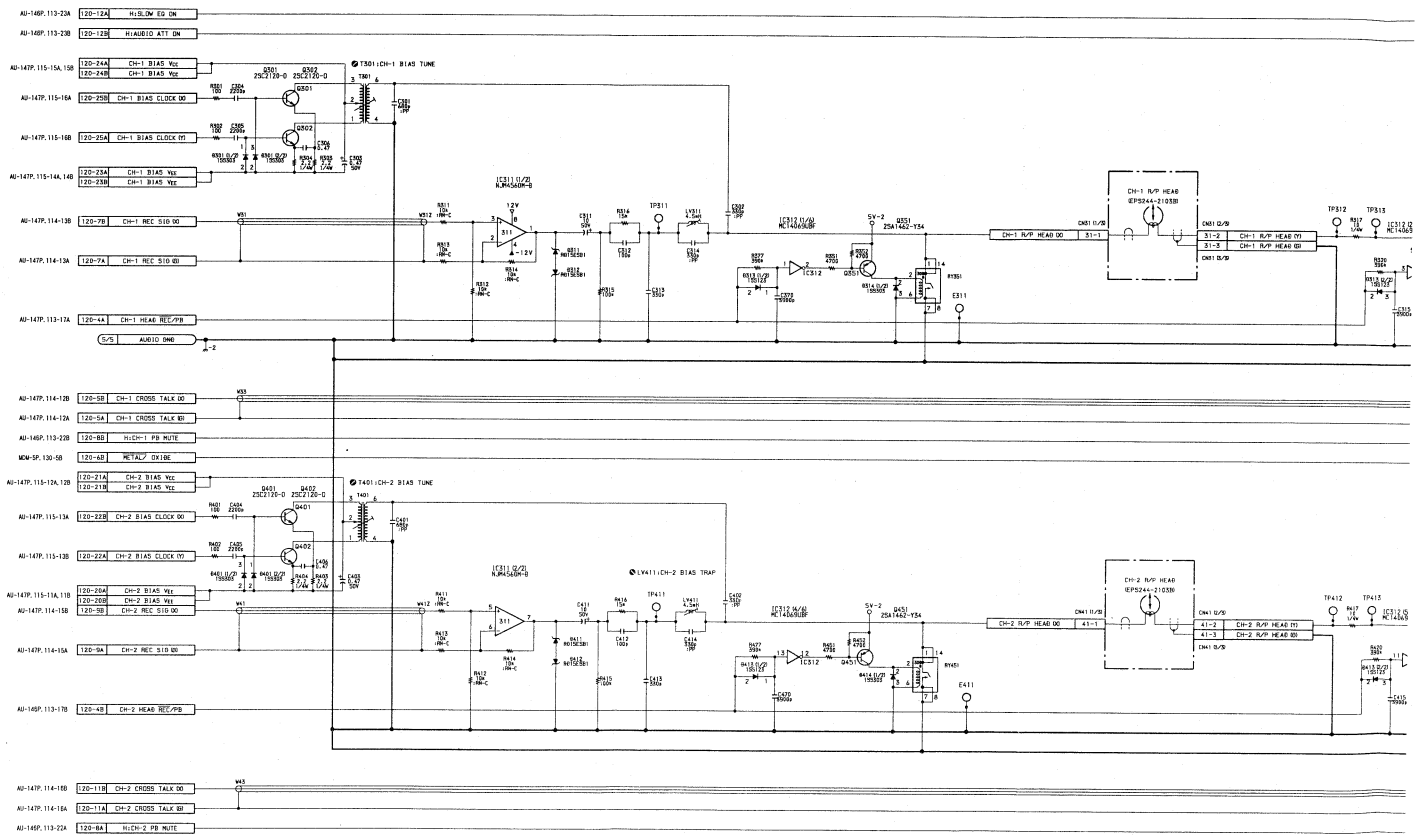

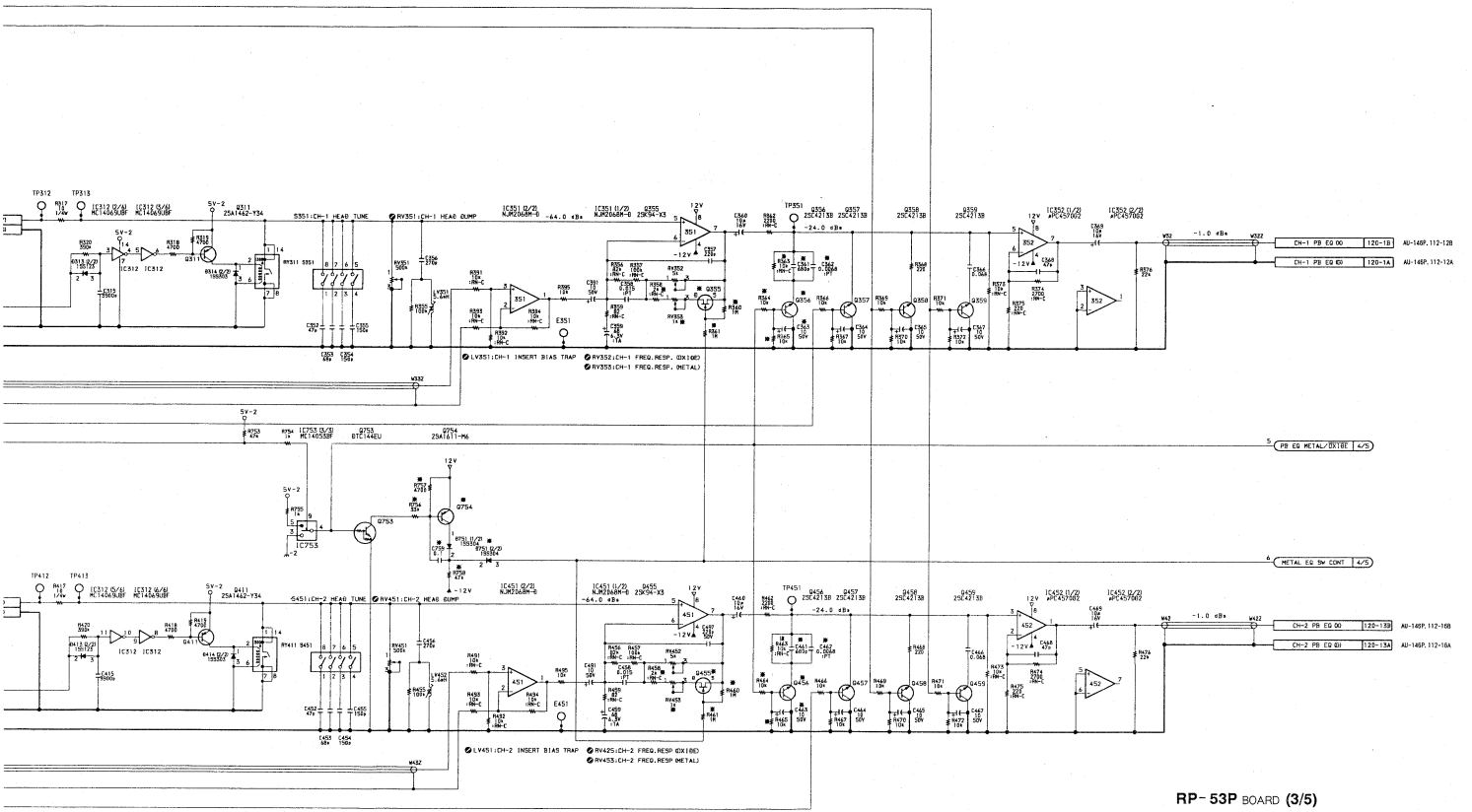

RP-53P BOARD (3/5)

1-640-684-11
BVW-D75PS ; # 10001-

RP-53P BOARD (4/5) (5/5)
Video/Audio Recording, Playback Amplifier

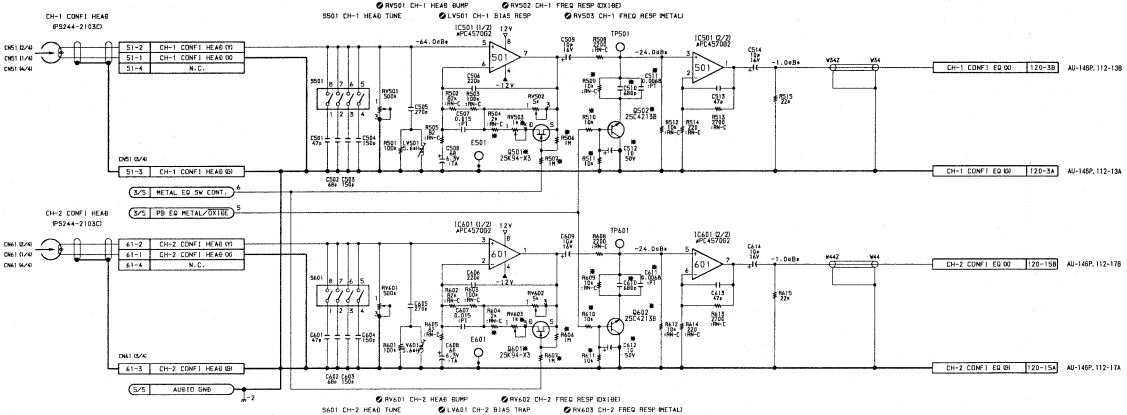

CN120 (1/4) 120-26A REG +
CN120 (2/4) 120-26B REG +
CN120 (3/4) 120-27A REG +
CN120 (4/4) 120-27B REG +
2/S REG

CN120 (5/4) 120-28A AUDIO
CN120 (6/4) 120-28B AUDIO
CN120 (7/4) 120-29A AUDIO
CN120 (8/4) 120-29B AUDIO
CN120 (9/4) 120-30A AUDIO
CN120 (10/4) 120-30B AUDIO

CN121 (1/4) 121-9A REG -
CN121 (2/4) 121-9B REG -
CN121 (3/4) 121-10A REG -
CN121 (4/4) 121-10B REG -
2/S RED

SS-48DP, 139-20A 120-17B REC T/C

AU-146P, 113-21A 120-16B L1T/C EQ

AU-146P, 113-28A 120-16A T/C REC

3/S AUDIO GN
4/S AUDIO GN

RP-53P BOARD **(4/5)**

1-640-664-11
BVW-D75PS : #10001-

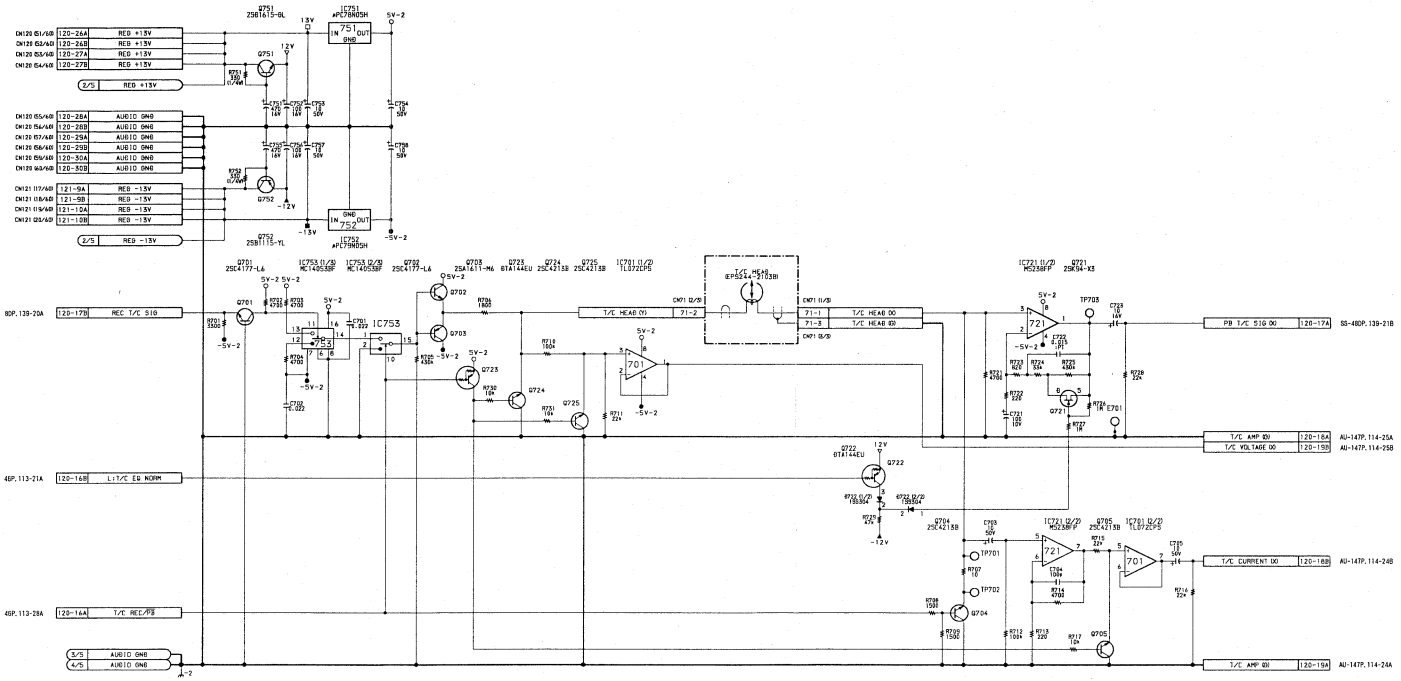

RP-53P BOARD (5/5)

1-640-684-11
BVW-D75PS ; #10001-

PA-109 BOARD
DT Head Amplifier

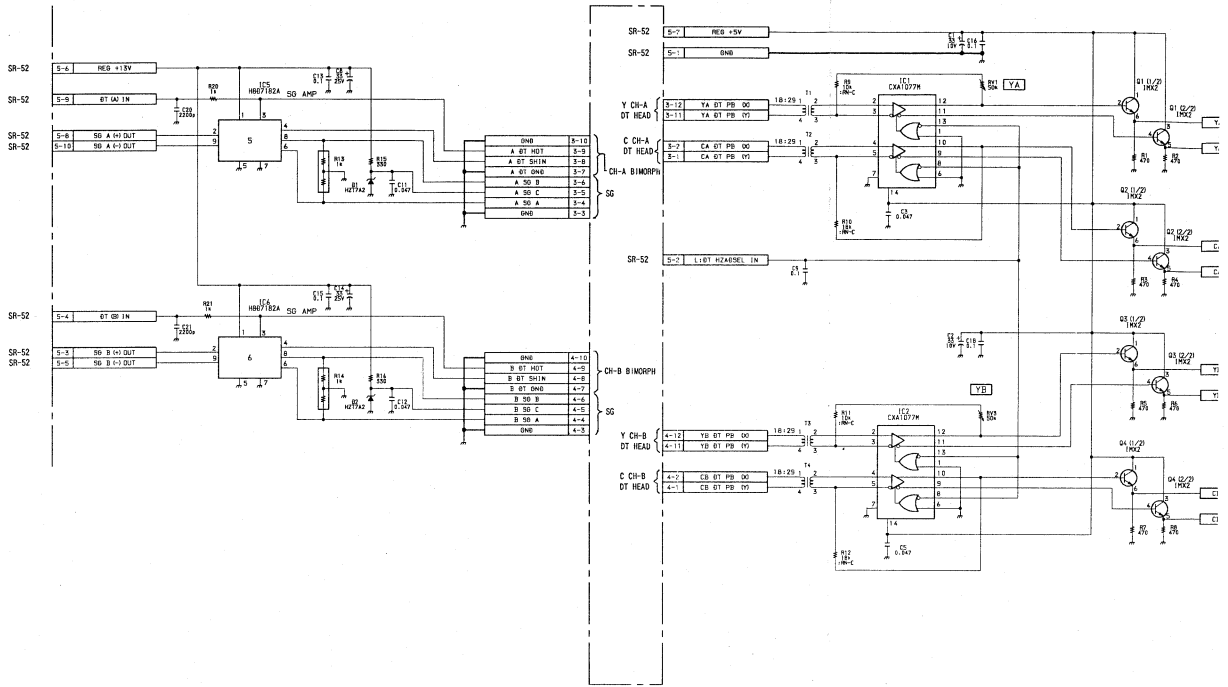

PA-109 BOARD

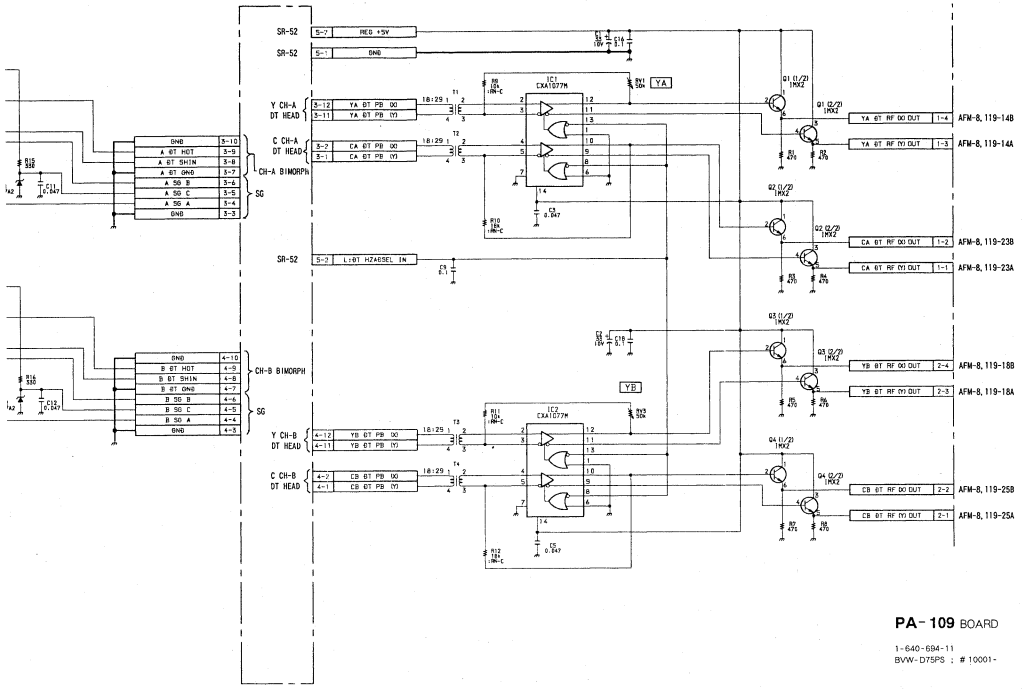

PA-109 BOARD

1-640-694-11
BVW-D75PS : # 10001-

TBC-17P BOARD (1/6)

A/D, D/A Memory, W/R Clock Generation

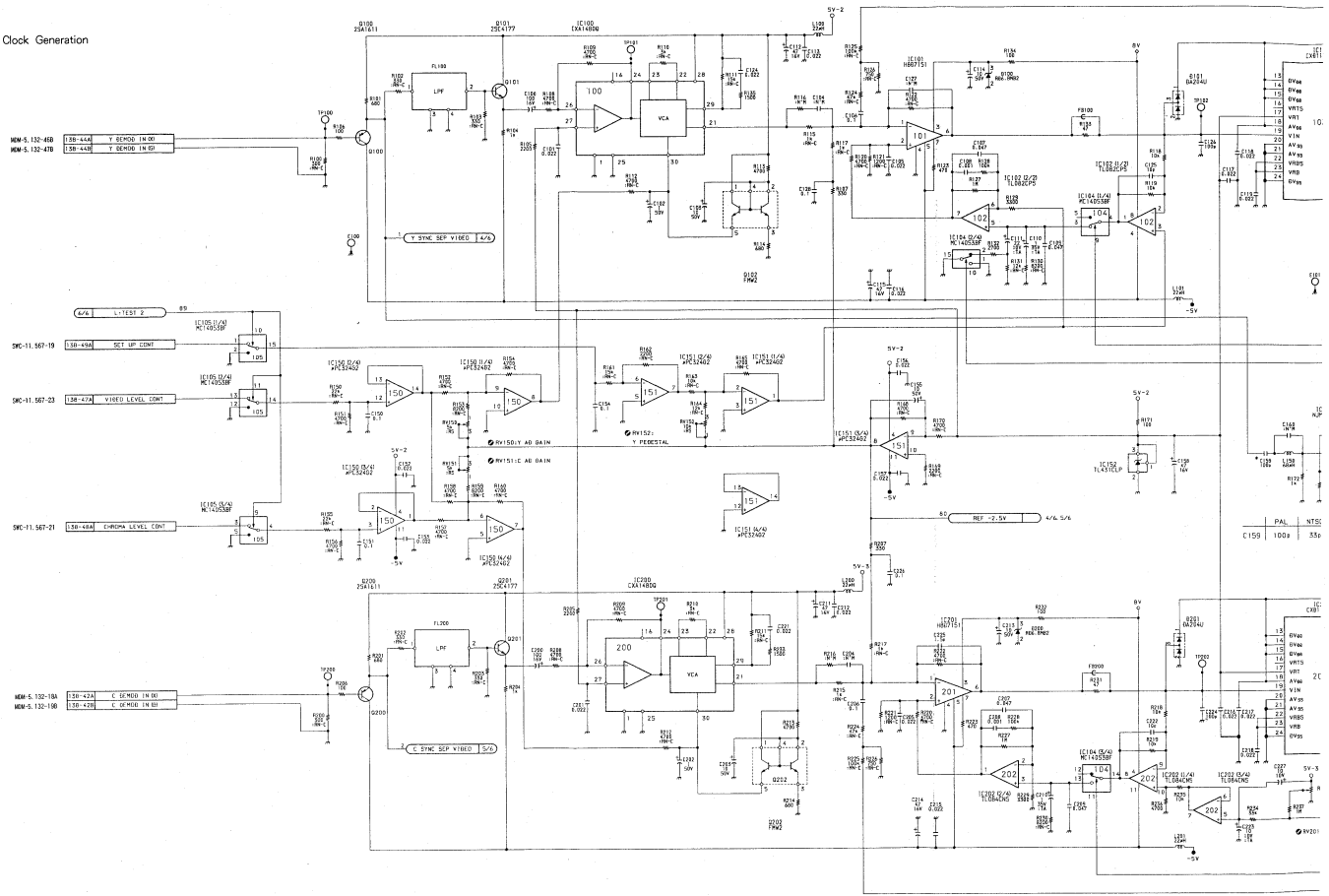

TBC-17P BOARD (1/6)

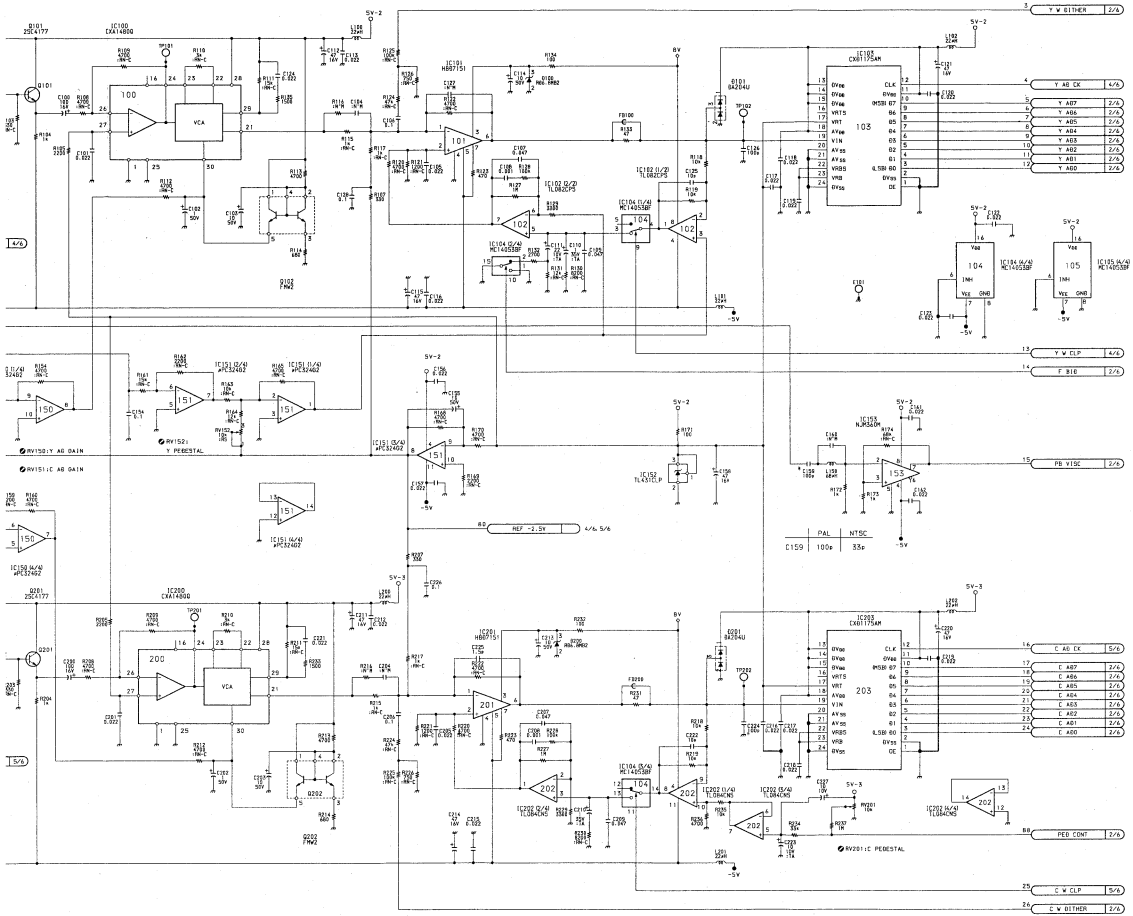

PAL/NTSC

	PAL	NTSC	PAGE
C159	100P	33p	1
C570	100P	33p	
R600	1K	N*M	
R601	N*M	0Ω	
R602	1K	N*M	3
R603	N*M	0Ω	
C574	100P	N*M	
C575	100P	N*M	
R651	0Ω	N*M	
C719	22P	33p	
R787	0Ω	N*M	
R789	0Ω	N*M	6
CP700	17.3MHz	14.32MHz	
FL700	2.2MHz	5.58MHz	

TBC-17P BOARD (1/6)

1-640-685-11
BVW-D75PS : #10001-

14-29

TBC-17P BOARD (2/6)

TBC-17P BOARD (2/6)

A/D, D/A Memory, W/R Clock Generation

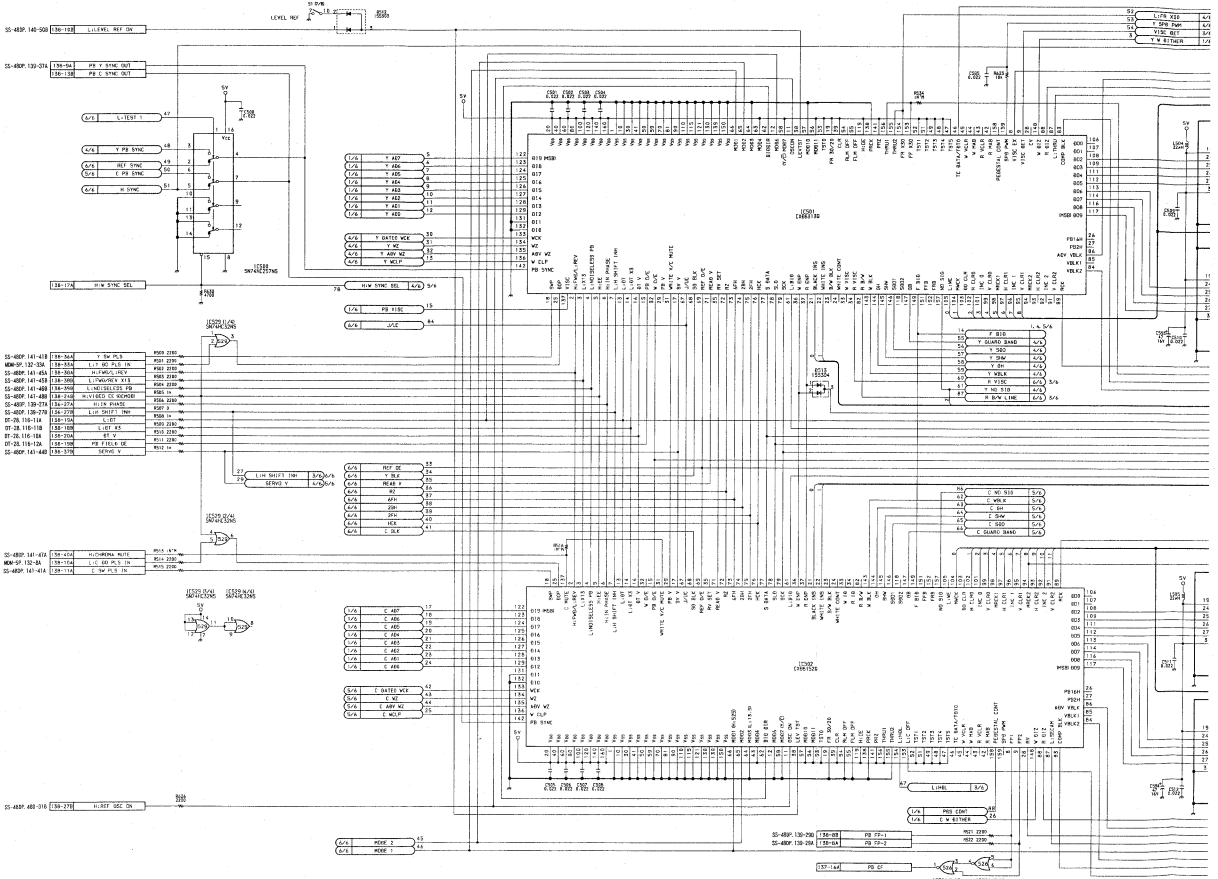

14-31

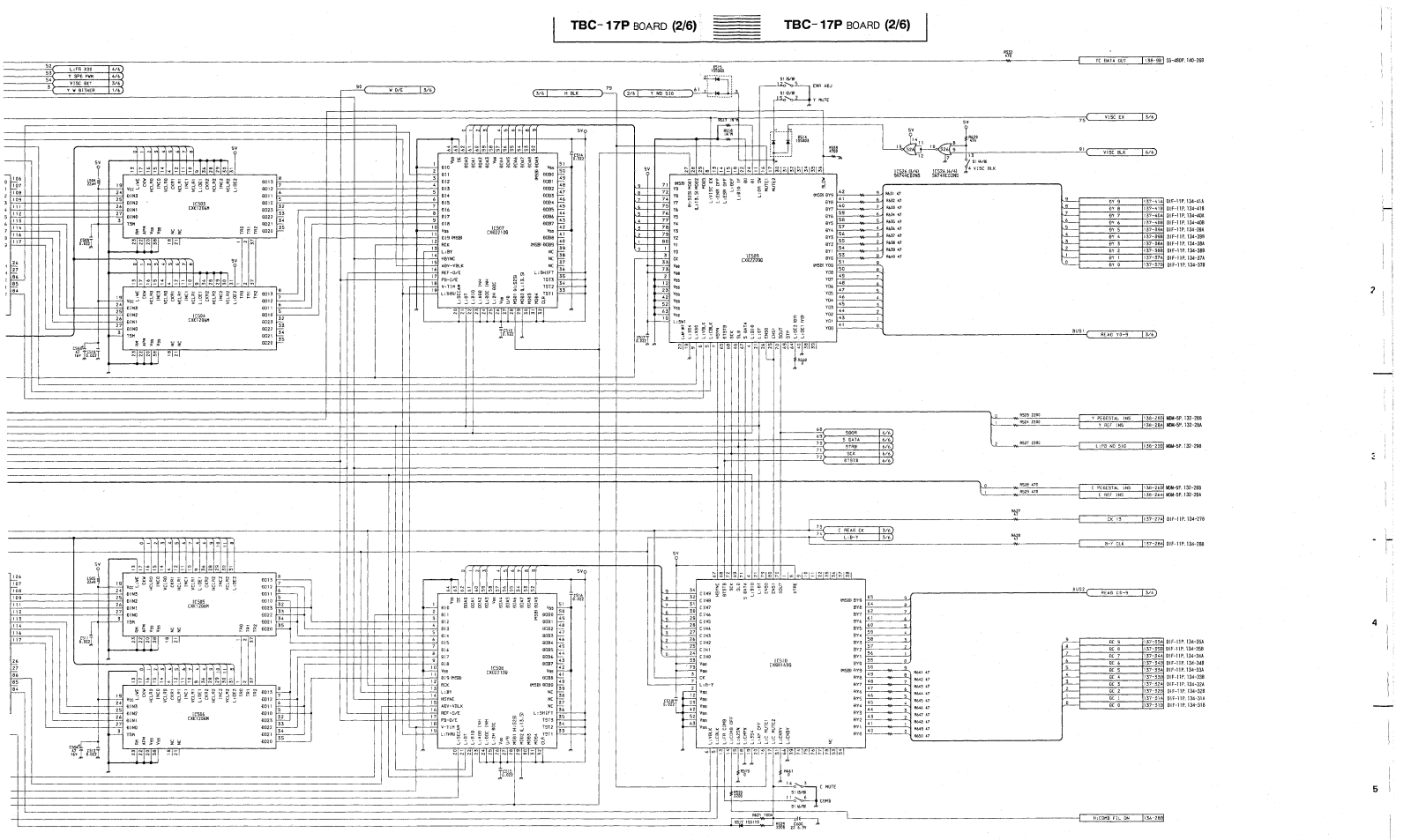

TBC-17P BOARD (2/6)

1-640-685-11
BVW-D75PS ; # 10001-

TBC-17P BOARD (3/6)

TBC-17P BOARD (3/6)

A/D, D/A Memory, W/R Clock Generation

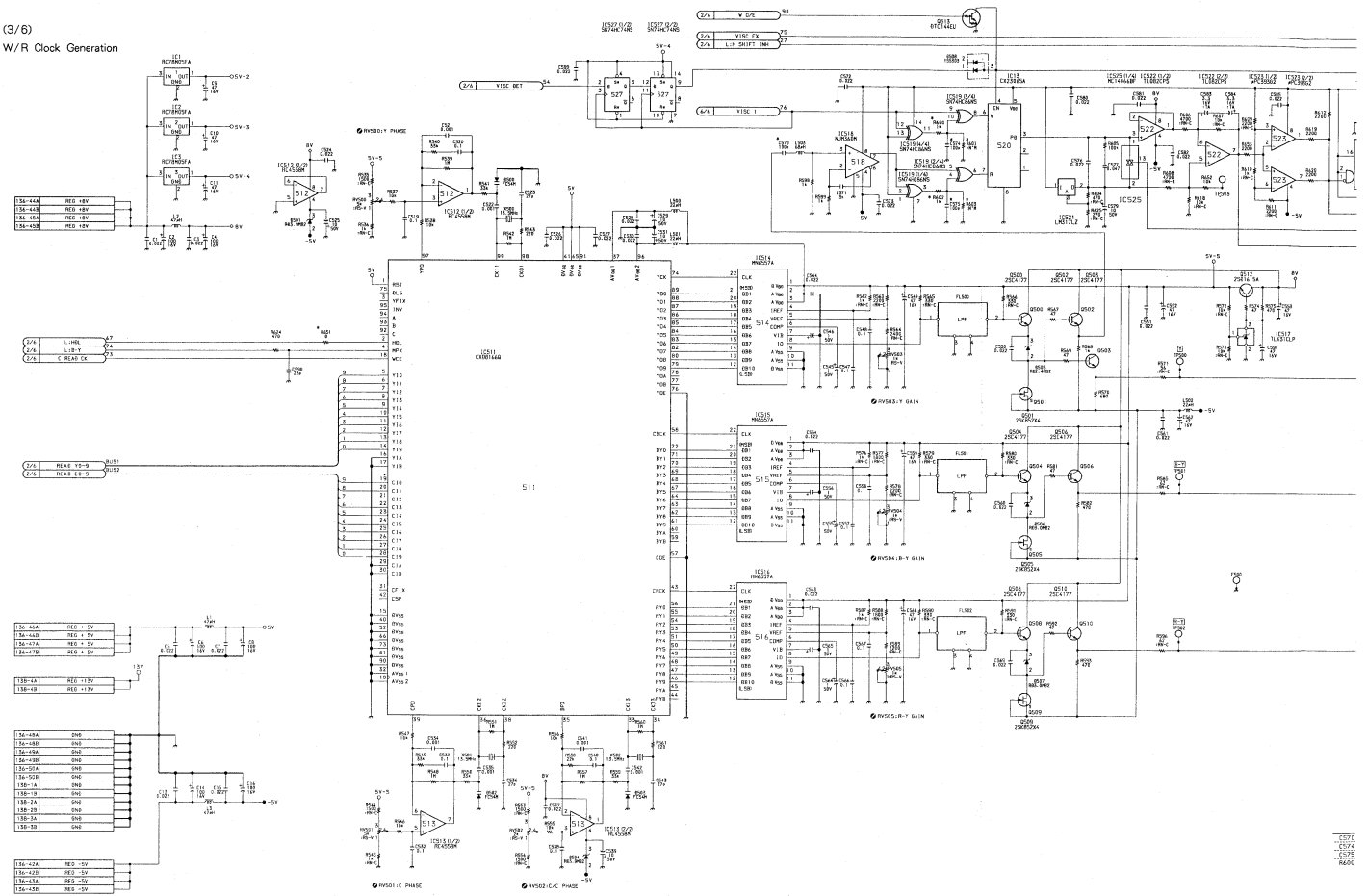

14-33

TBC-17P BOARD (3/6)

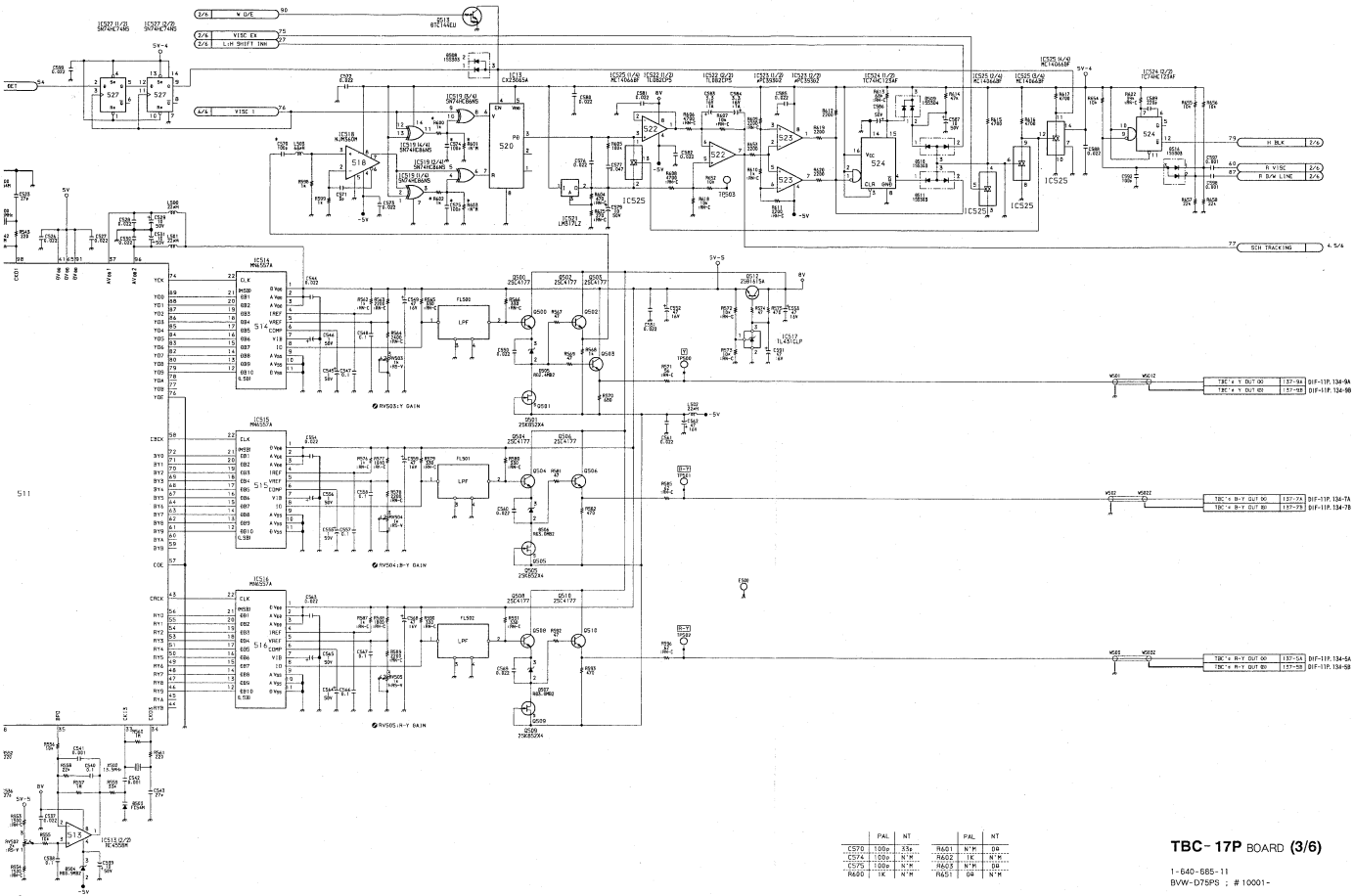

	PAL	NT
C570	100p	33p
C574	100p	N.M.
C575	100p	N.M.
R600	1K	N.M.

	PAL	NT
R601	N.M.	0Ω
R602	1K	N.M.
R603	N.M.	0Ω
R651	0Ω	N.M.

TBC-17P BOARD (3/6)

1-640-665-11
BVW-D75PS ; # 10001-

14-33

TBC-17P BOARD (4/6)
A/D, D/A Memory, W/R Clock Generation

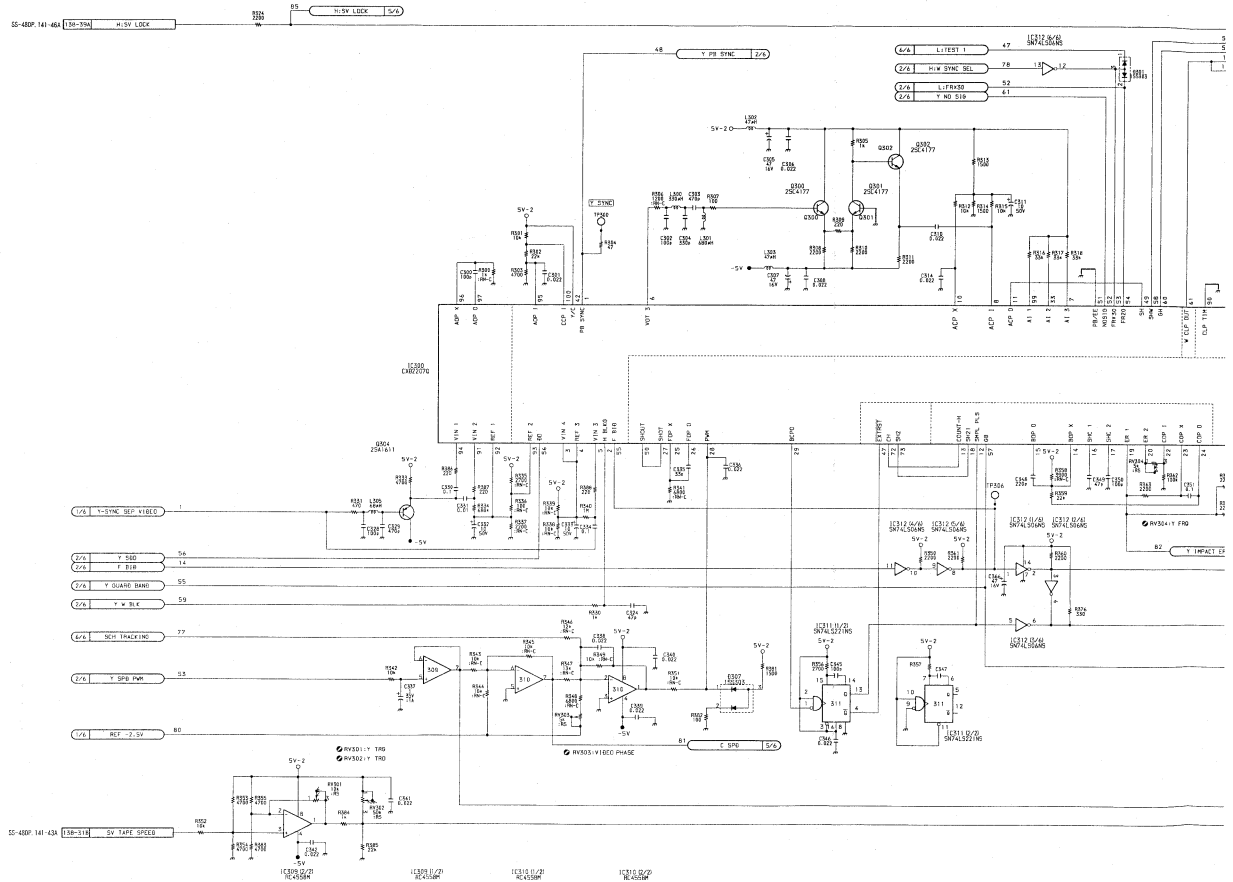

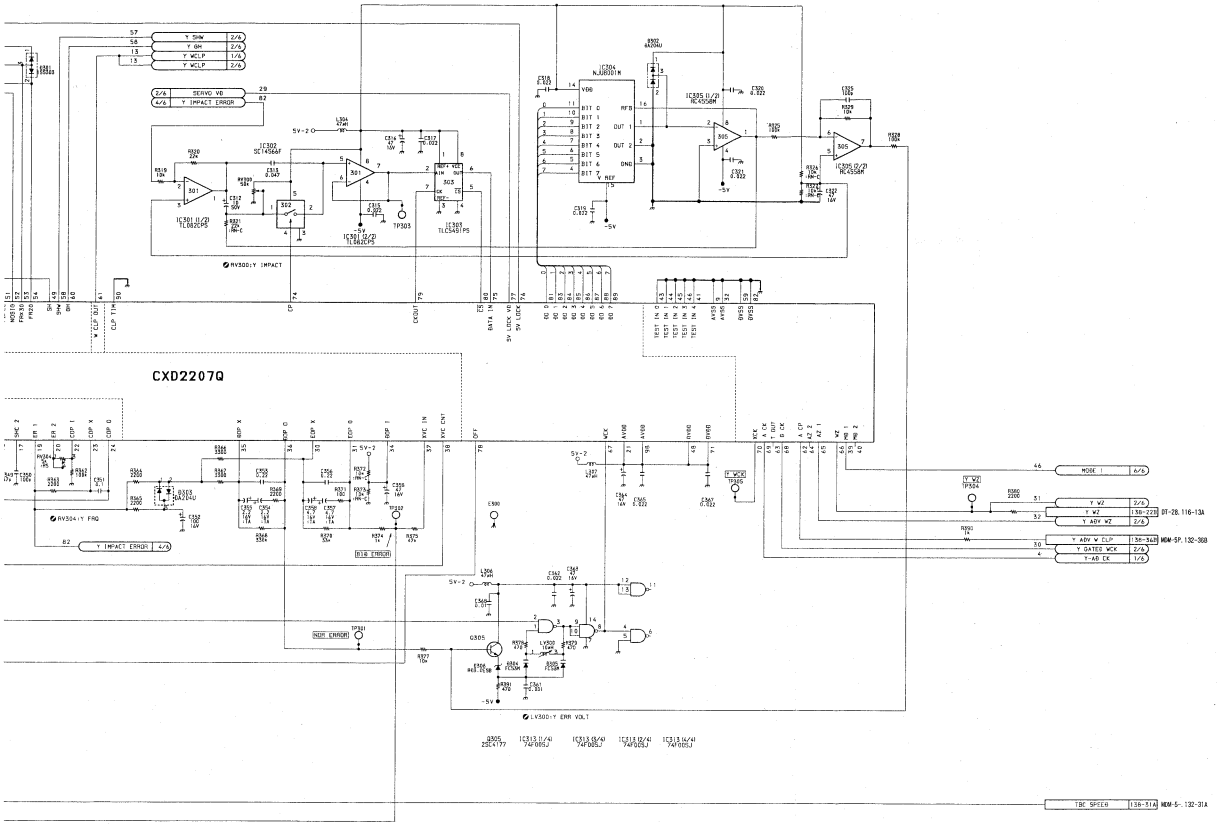

TBC-17P BOARD (4/6)

1-640-685-11
BVW-D75PS : #10001-

14-35

TBC-17P BOARD (5/6)

A/D, D/A Memory, W/R Clock Generation

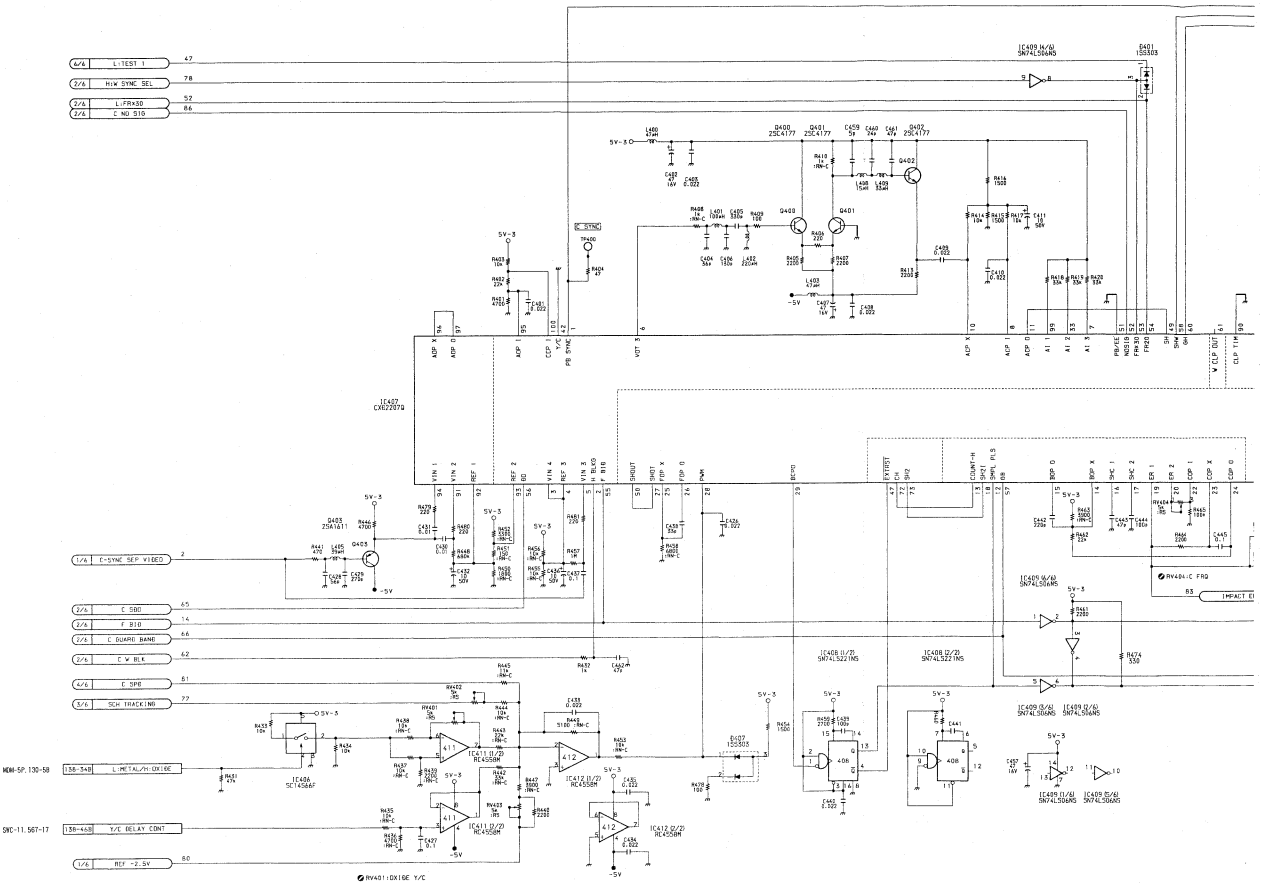

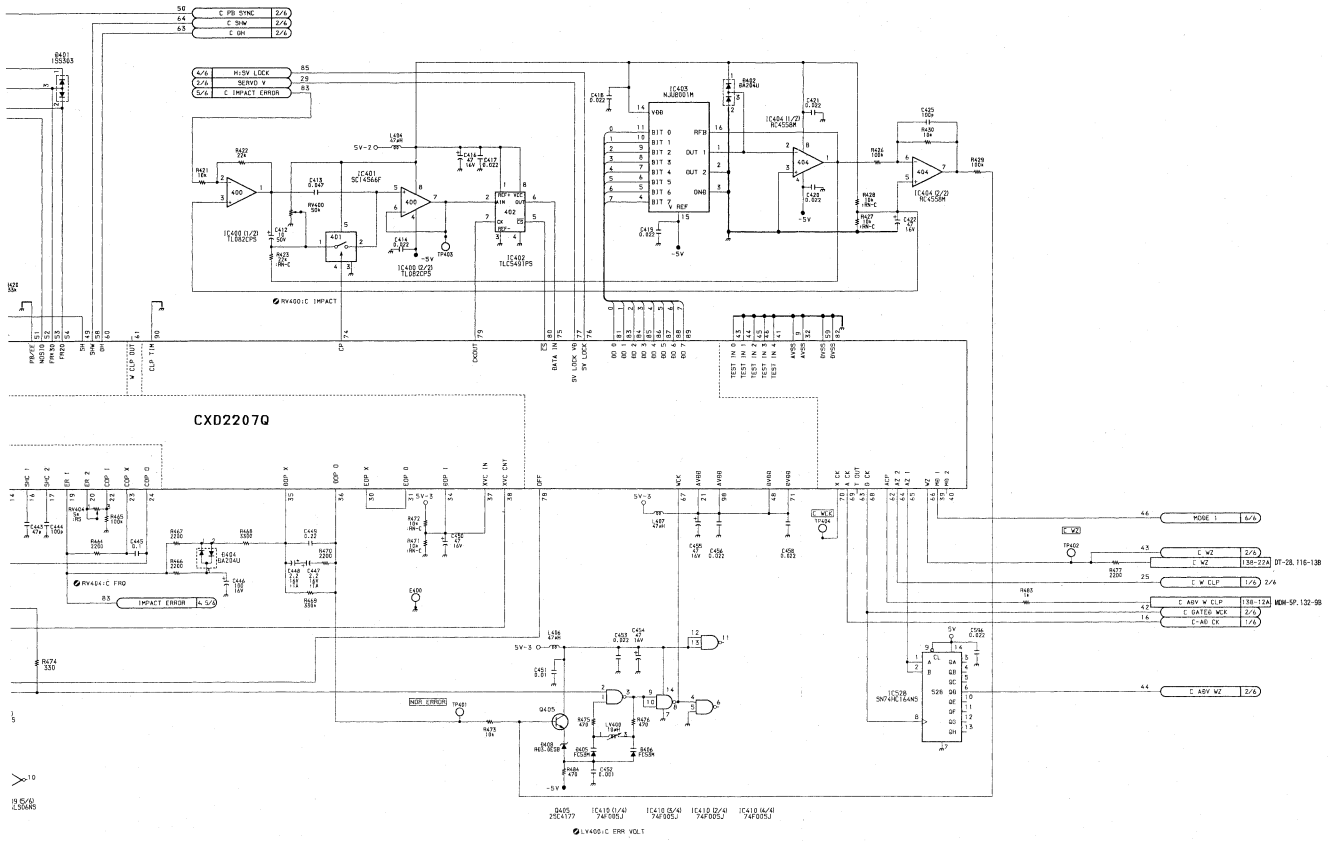

TBC-17P BOARD (5/6)

1-640-685-11
BVW-D75PS : #10001-

14-37

TBC-17P BOARD (6/6)

A/D, D/A Memory, W/R Clock Generation

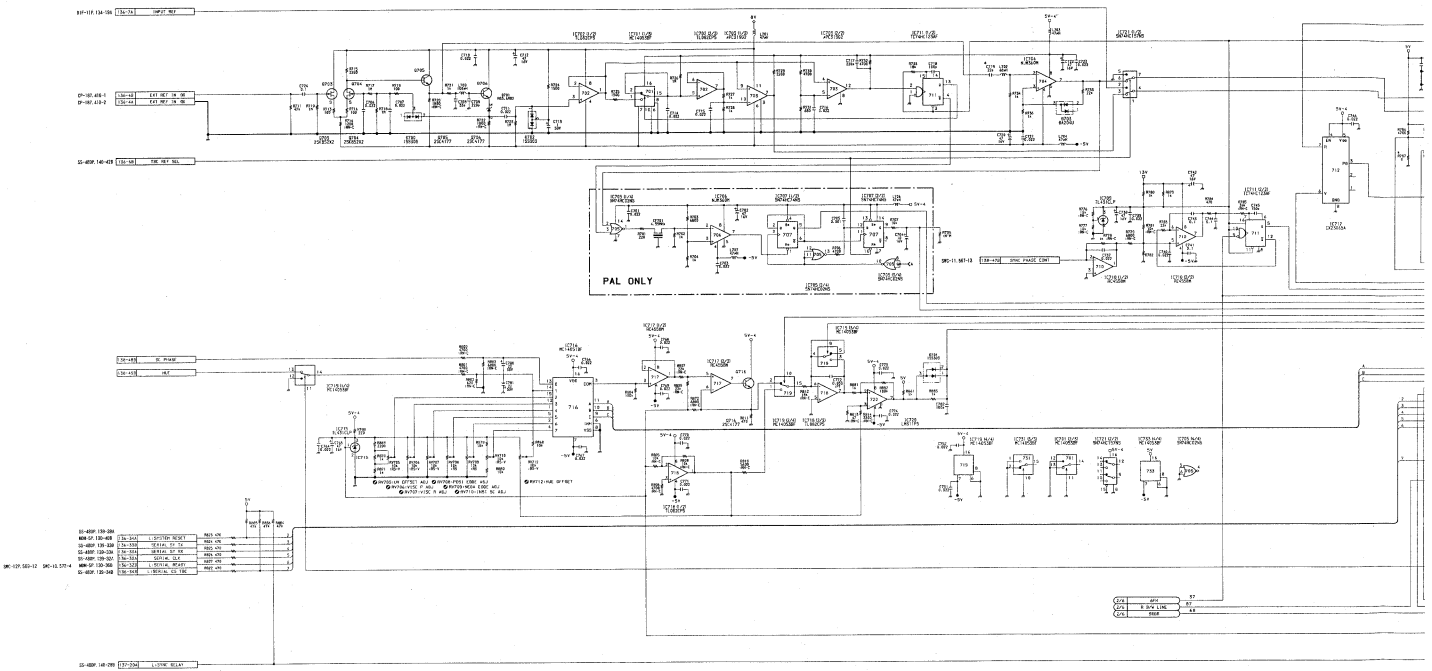

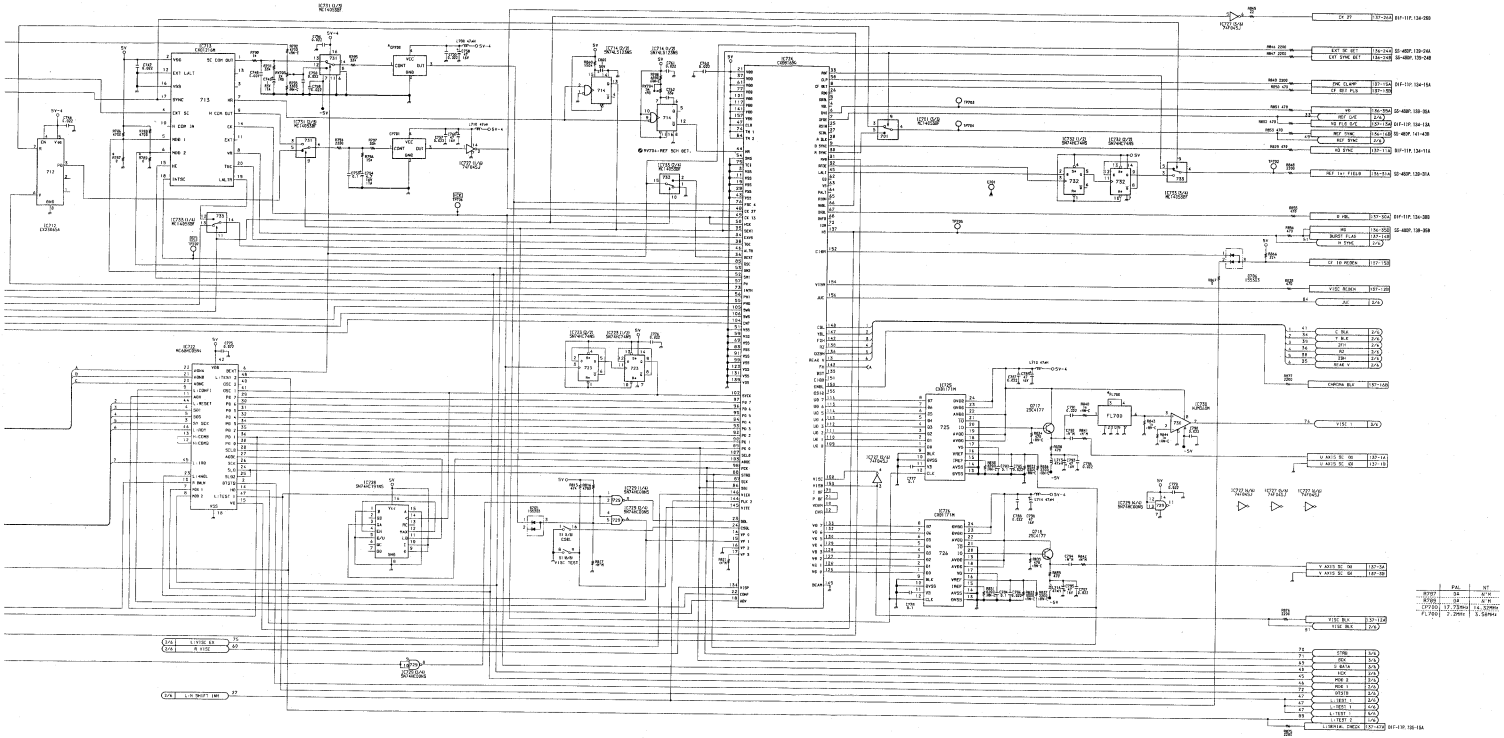

TBC-17P BOARD (6/6)

1-640-685-11
BVW-D75PS : #10001-

CP-187 BOARD
REF Video in Monitor Out
SWC-11
S/P, TBC PROC Control

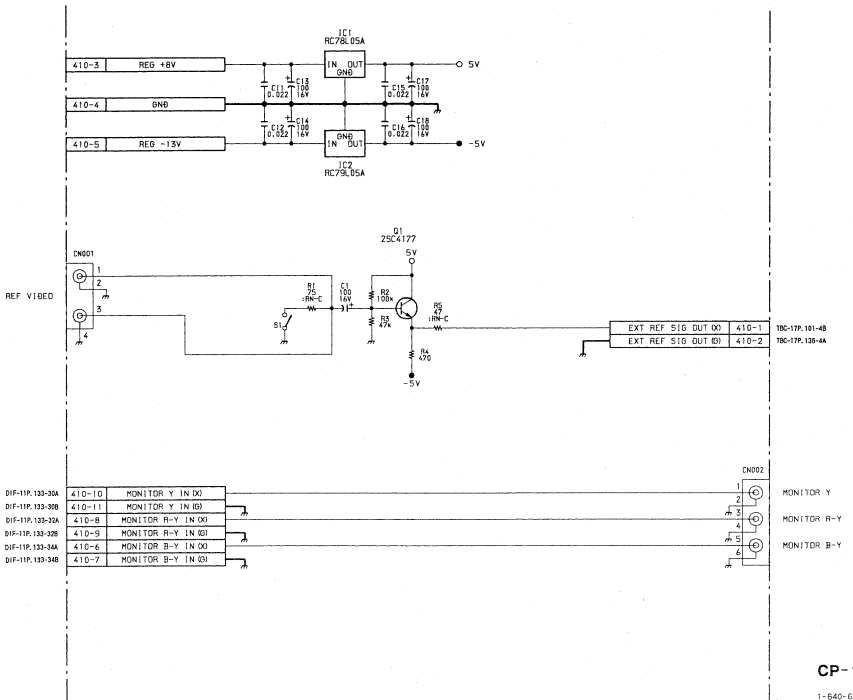

CP-187 BOARD

1-640-675-11
BVW-D75PS : #10001-

14-41

A | B | C | D | E | F | G | H

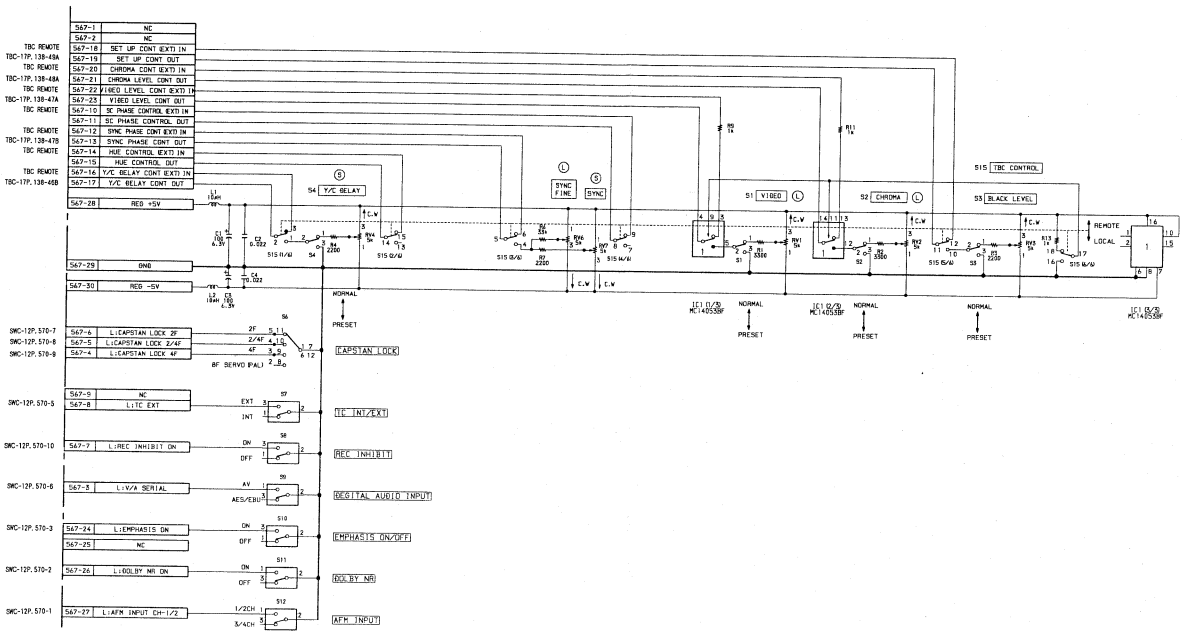

SWC-11 BOARD

1-640-690-11
BVW-D75PS : # 10001-

DIF-11P (1/5), DUS-490 BOARD

DIF-11P BOARD (1/5)
S/P, P/S Converter 4 : 2 : 2 DEC/ENC
DUS-490

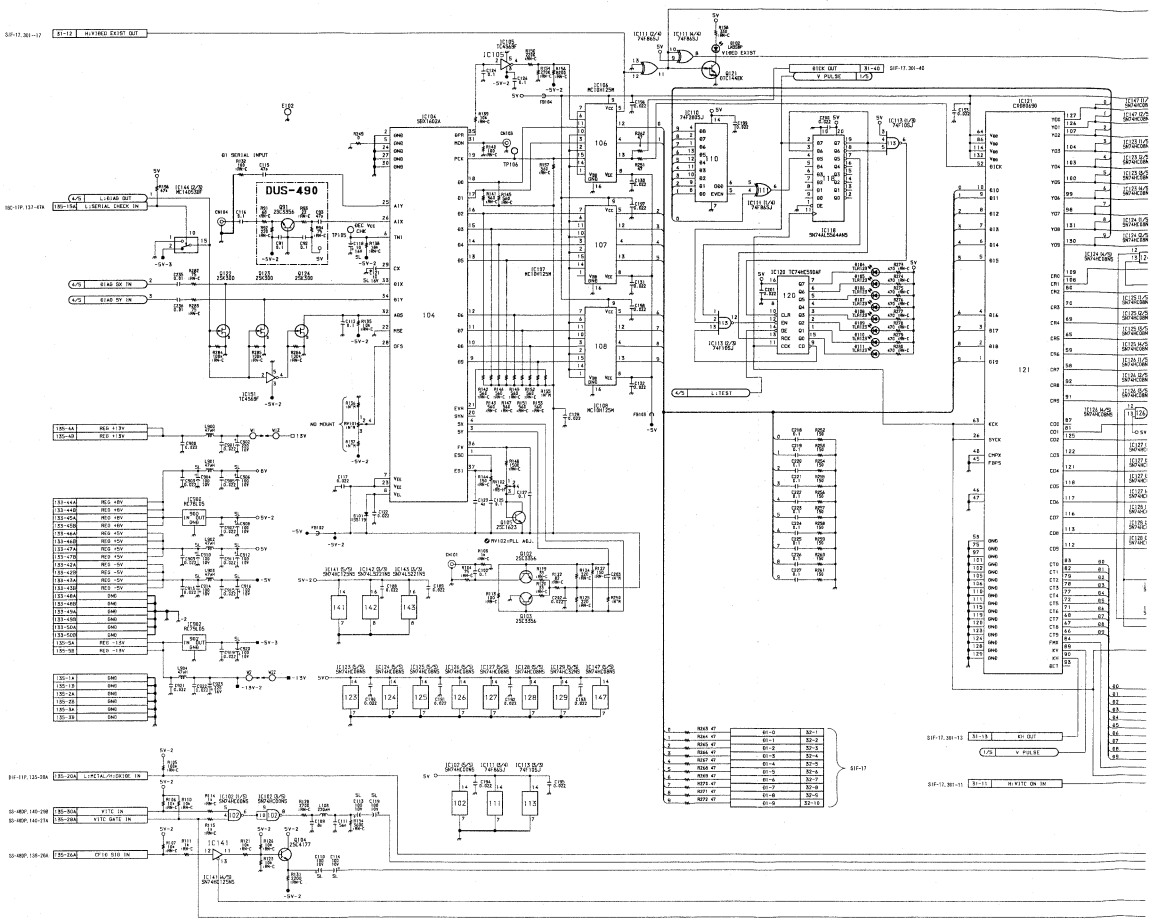

14-43

DIF-11P (1/5), DUS-490 BOARD

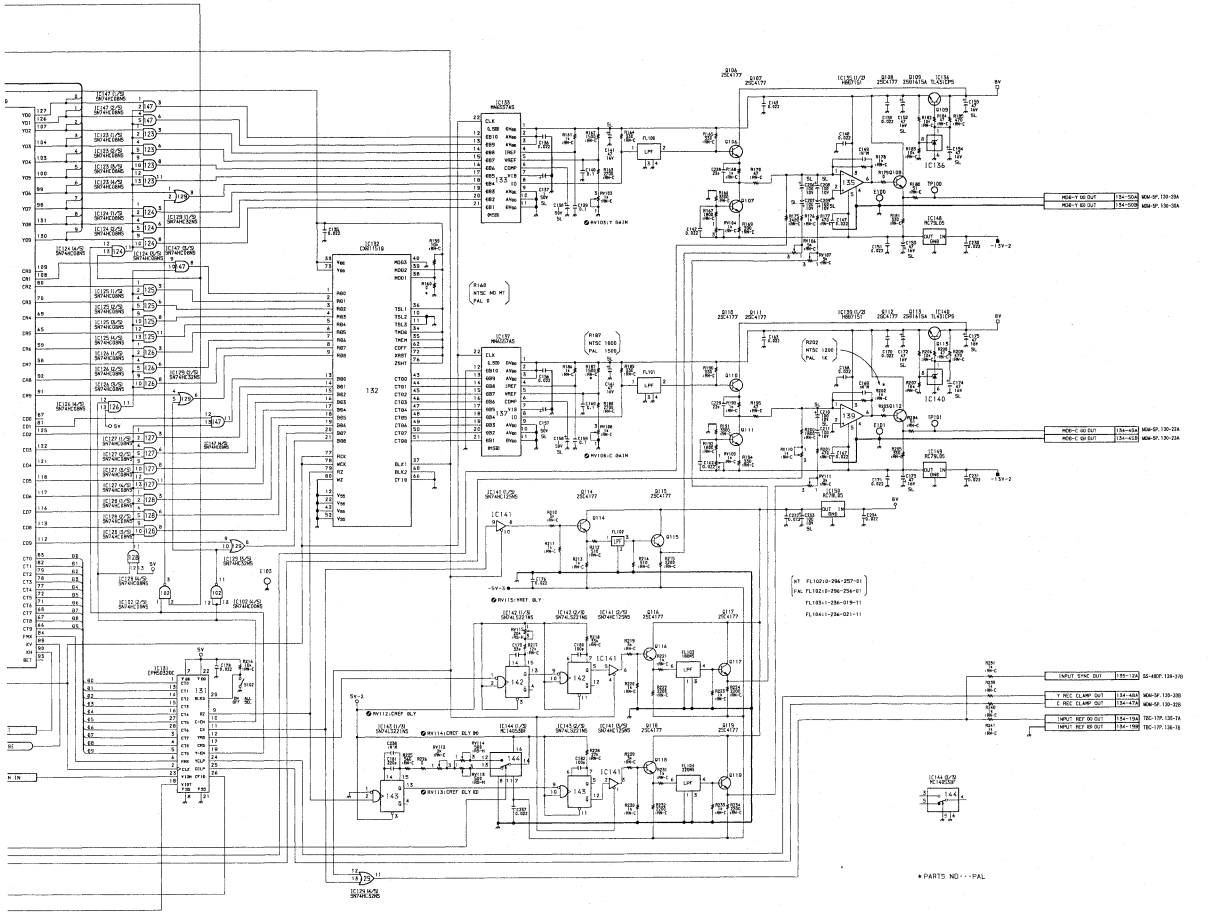

* PARTS NO···PAL

DIF-11P BOARD (1/5)

1-640-686-11
BVW-D75PS : # 10001-

14-43

DIF-11P BOARD (2/5)

S/P, P/S Converter 4 : 2 : 2 DEC/ENC

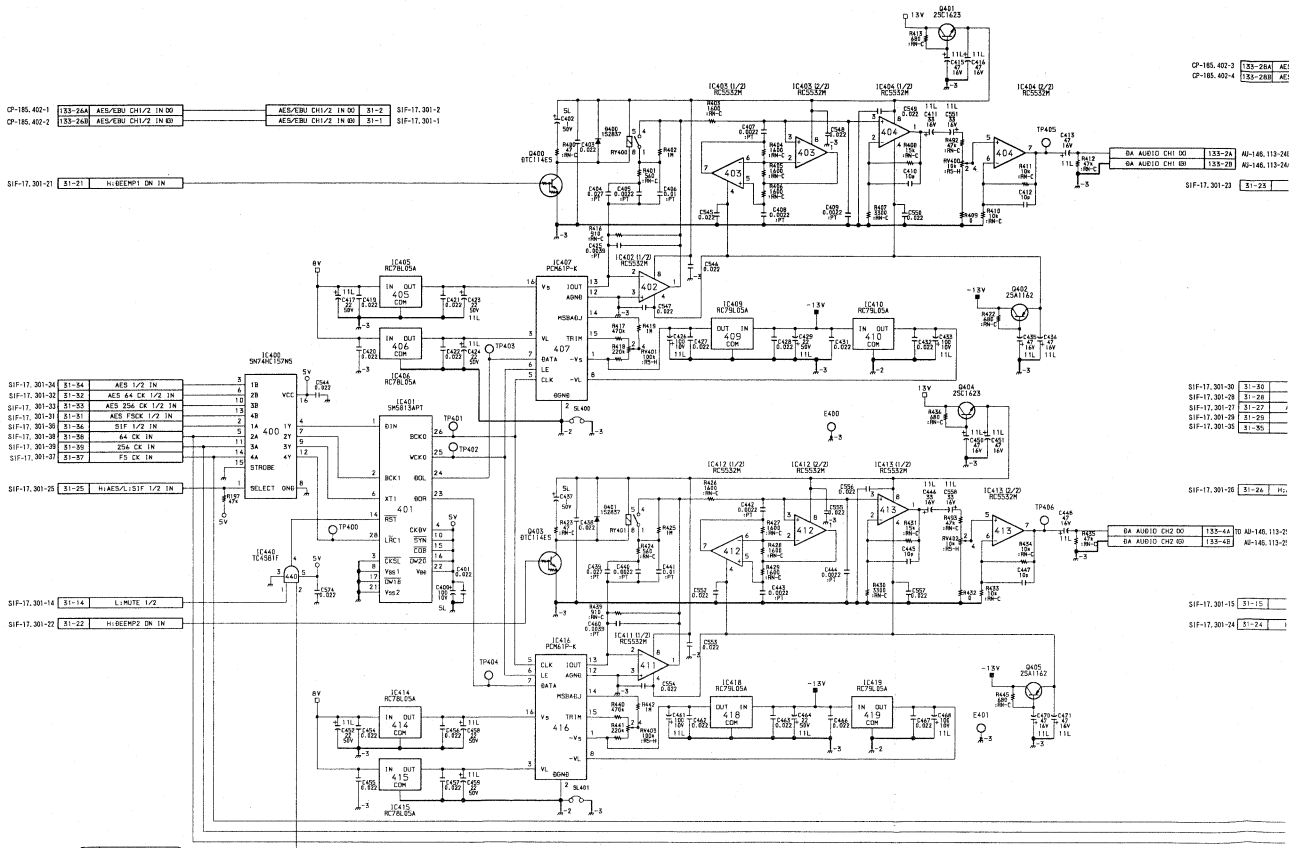

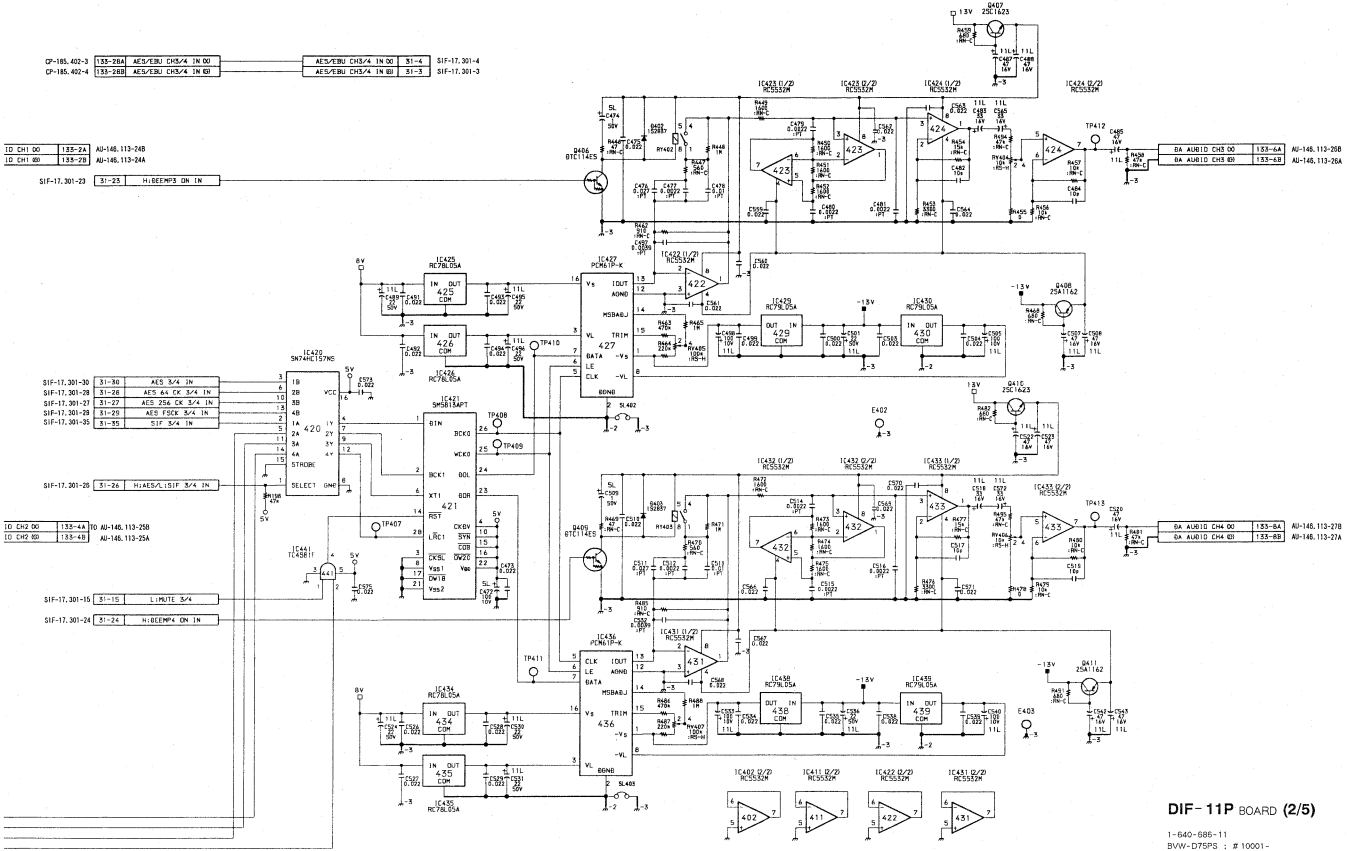

DIF-11P BOARD (2/5)

1-640-686-11
BVW-D75PS : # 10001-

DIF-11P BOARD (3/5)
S/P, P/S Converter 4 : 2 : 2 DEC/ENC
DUS-359

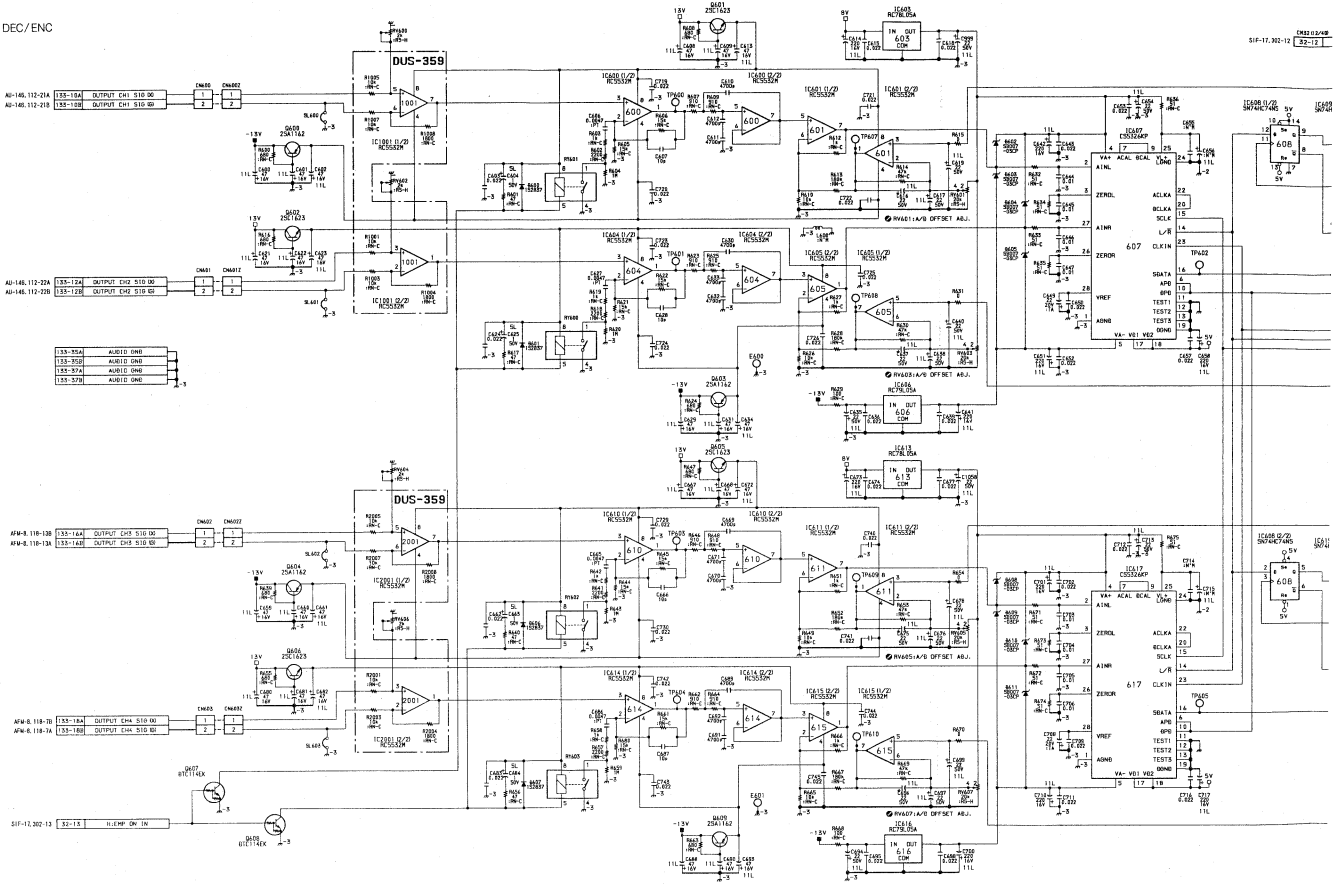

A B C D E F G H

DIF-11P (3/5), DUS-359 BOARD

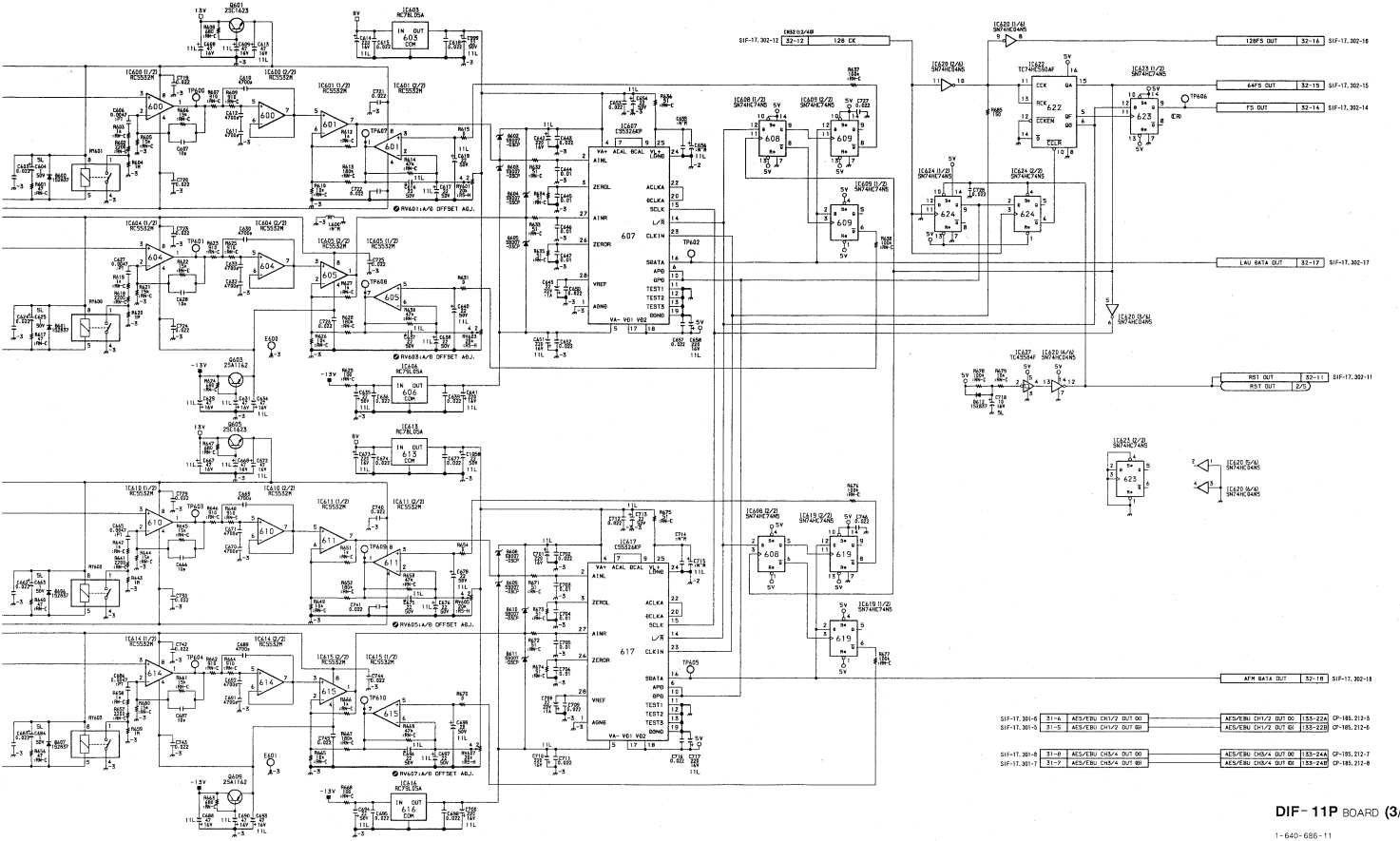

DIF-11P BOARD (3/5)

1-640-686-11
BVW-D75PS : # 10001-

DIF-11P BOARD (4/5)

S/P, P/S Converter 4 : 2 : 2 DEC/ENC

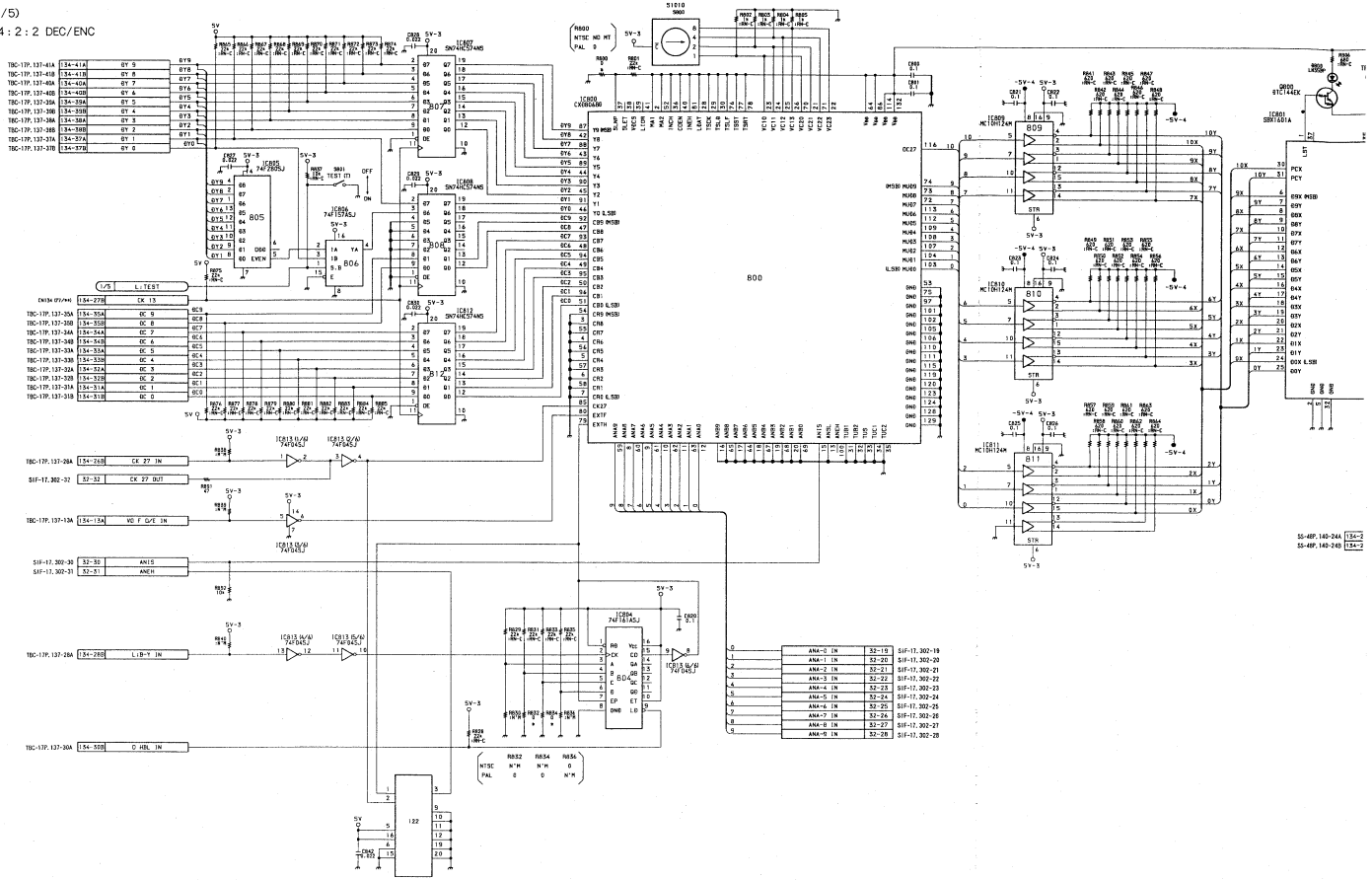

DIF-11P BOARD (4/5)

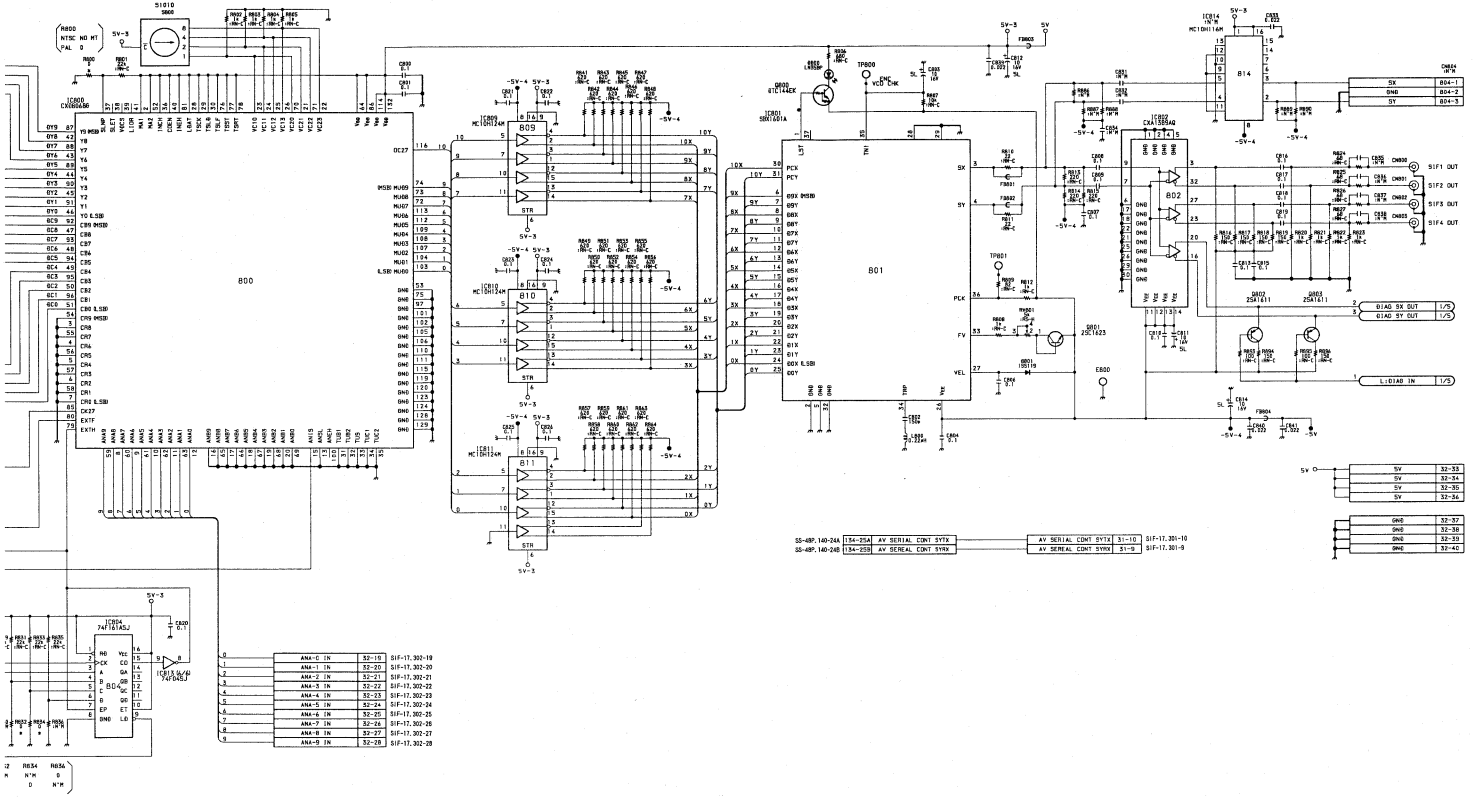

DIF-11P BOARD (4/5)

1-640-686-11
BVW-D75PS : #10001-

14-49

DIF-11P BOARD (5/5)

S/P, P/S Converter 4 : 2 : 2 DEC/ENC

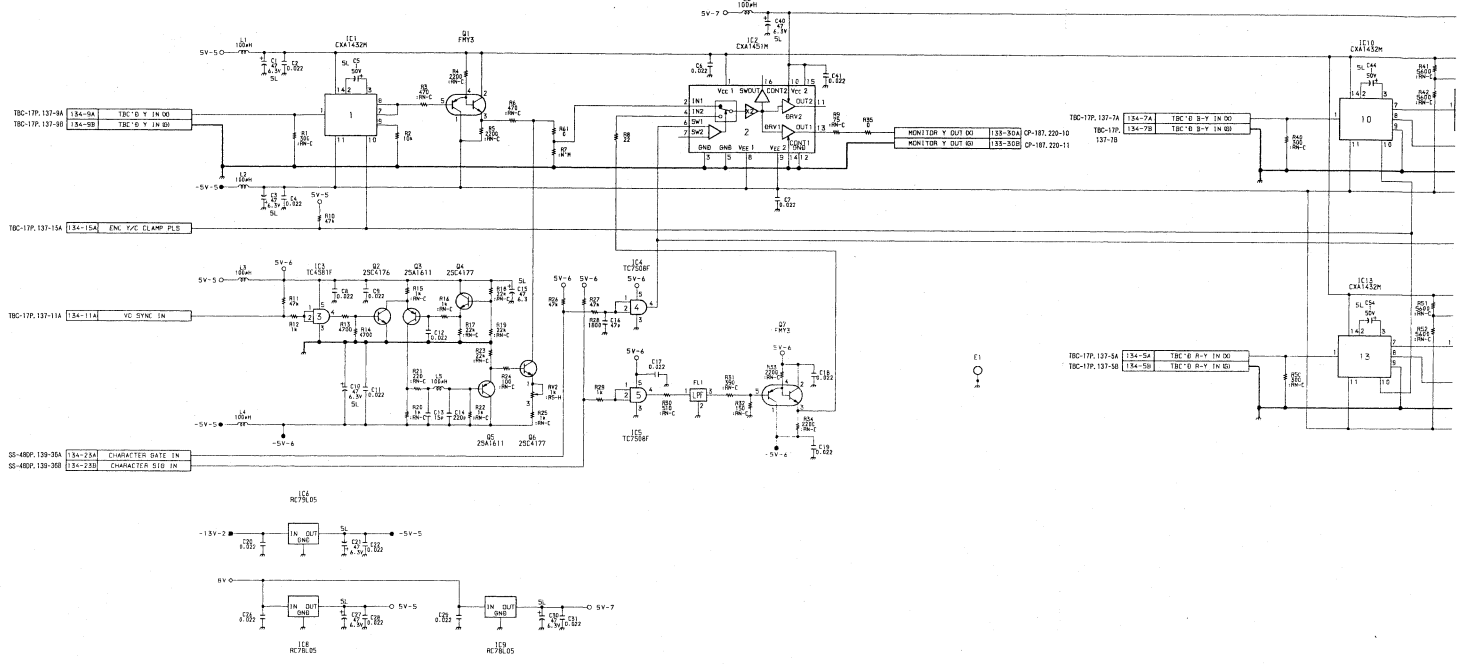

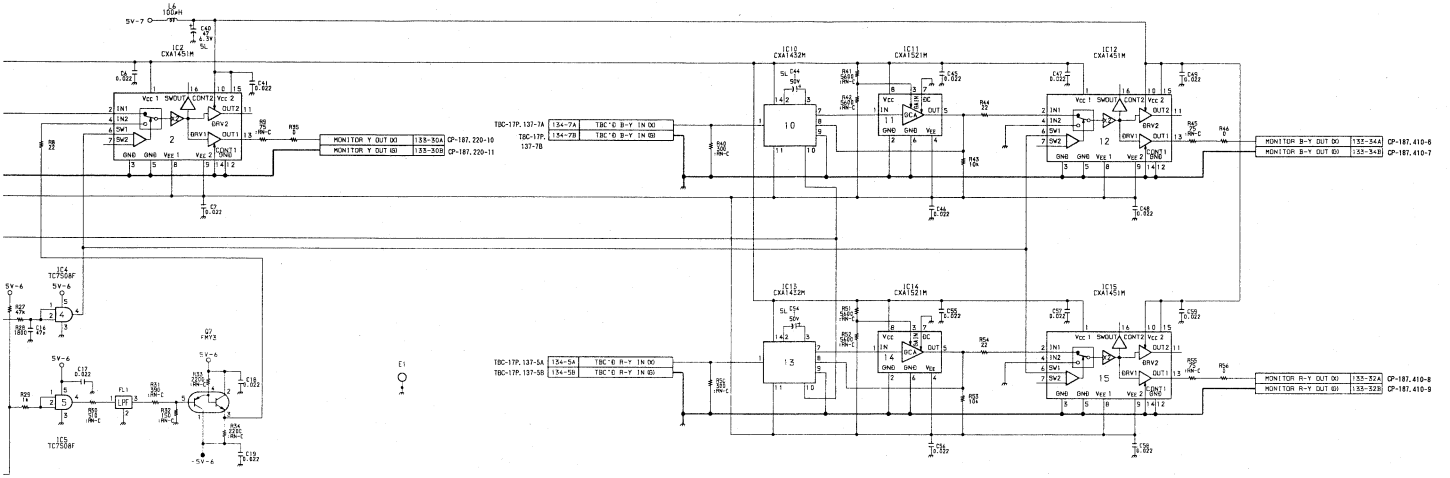

DIF-11P BOARD (5/5)

1-640-686-11
BVW-D75PS : #10001-

14-51

SIF-17

AES/EBU Decoder, Encoder

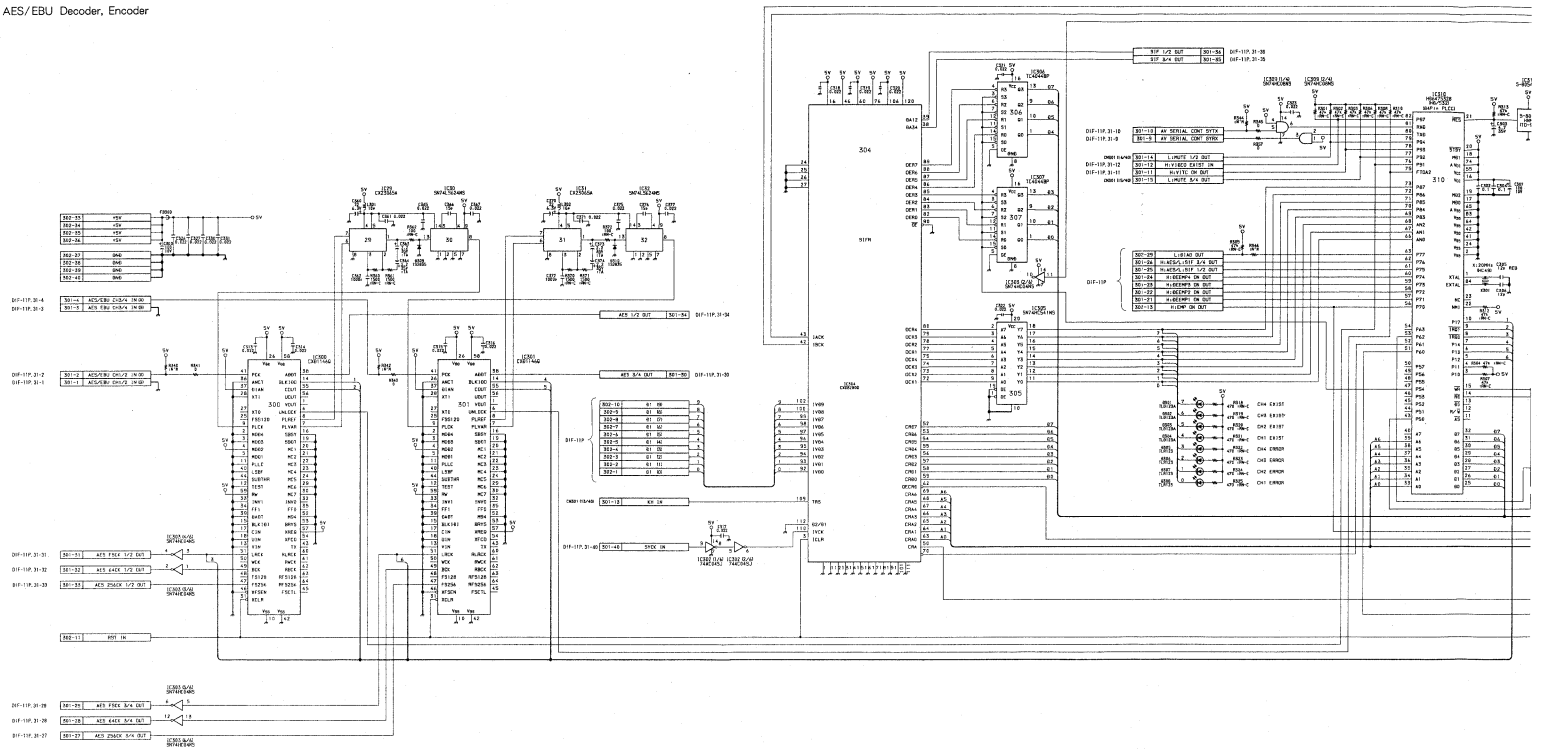

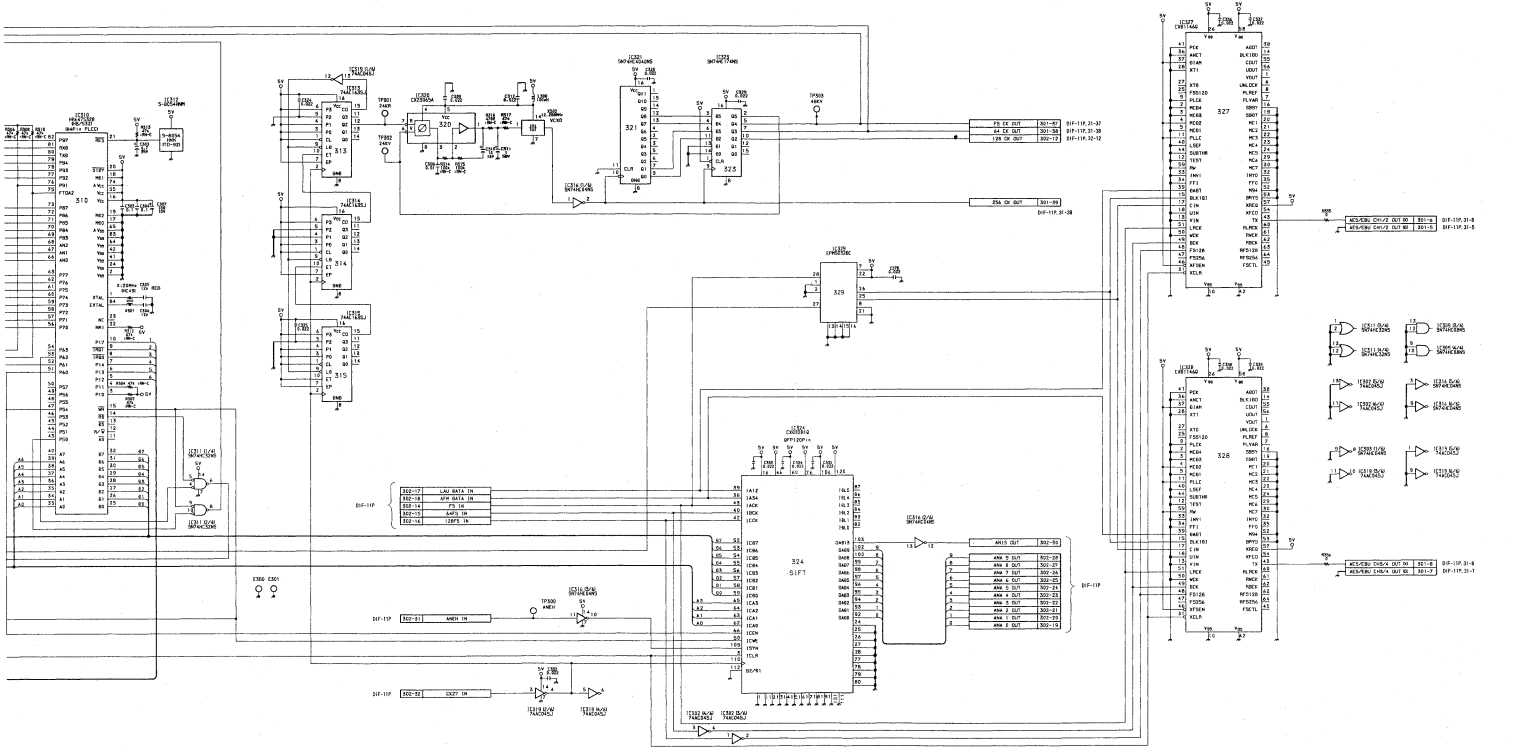

SIF-17 BOARD

1-640-687-12
BVW-D75PS ; #10001-

CP-175
Audio Input Amplifier

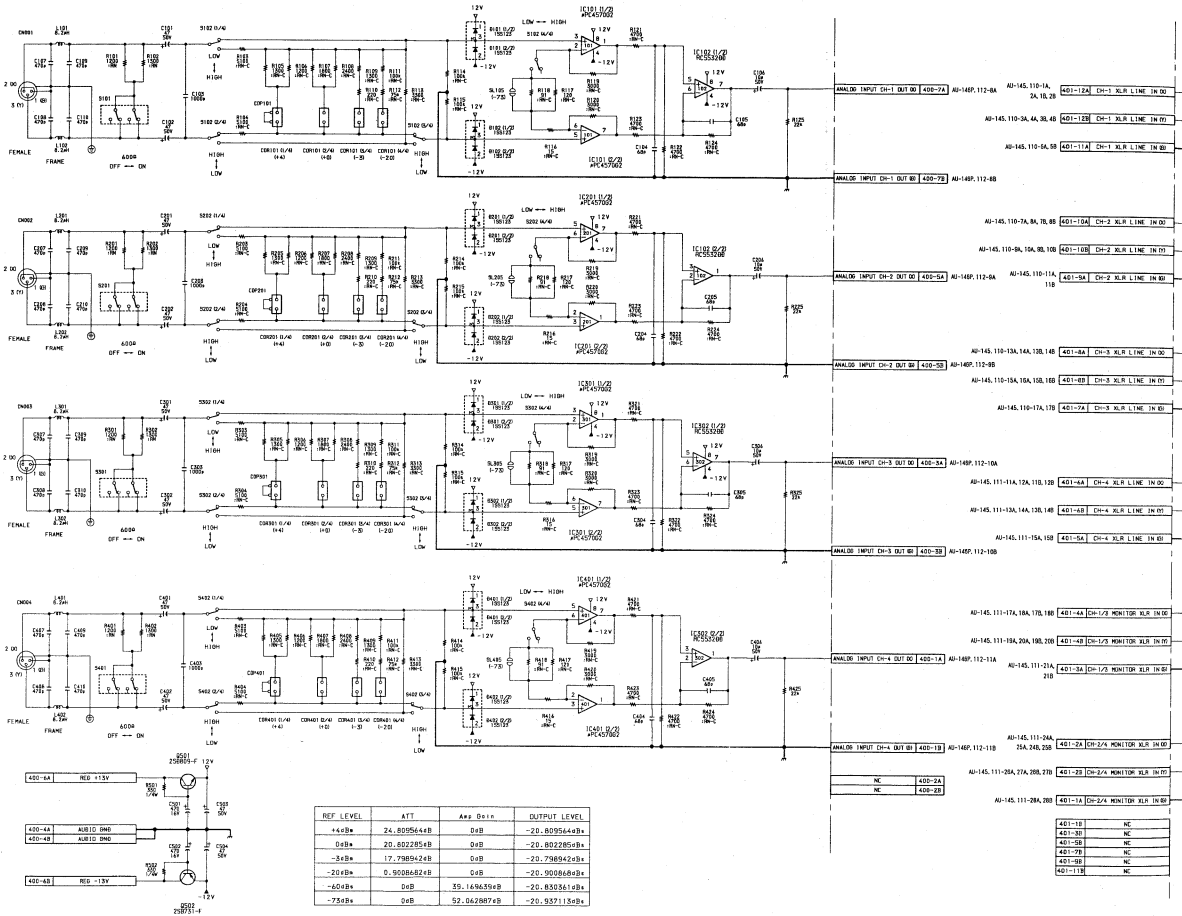

REF LEVEL	ATT	Amp Gain	OUTPUT LEVEL
+4dBm	24.809564dB	0dB	-20.809564dBm
0dBm	20.802285dB	0dB	-20.802285dBm
-5dBm	17.798942dB	0dB	-20.798942dBm
-20dBm	0.900868dB	0dB	-20.900868dBm
-60dBm	0dB	39.169635dB	-20.830561dBm
-75dBm	0dB	52.067887dB	-20.937113dBm

CP-175 BOARD

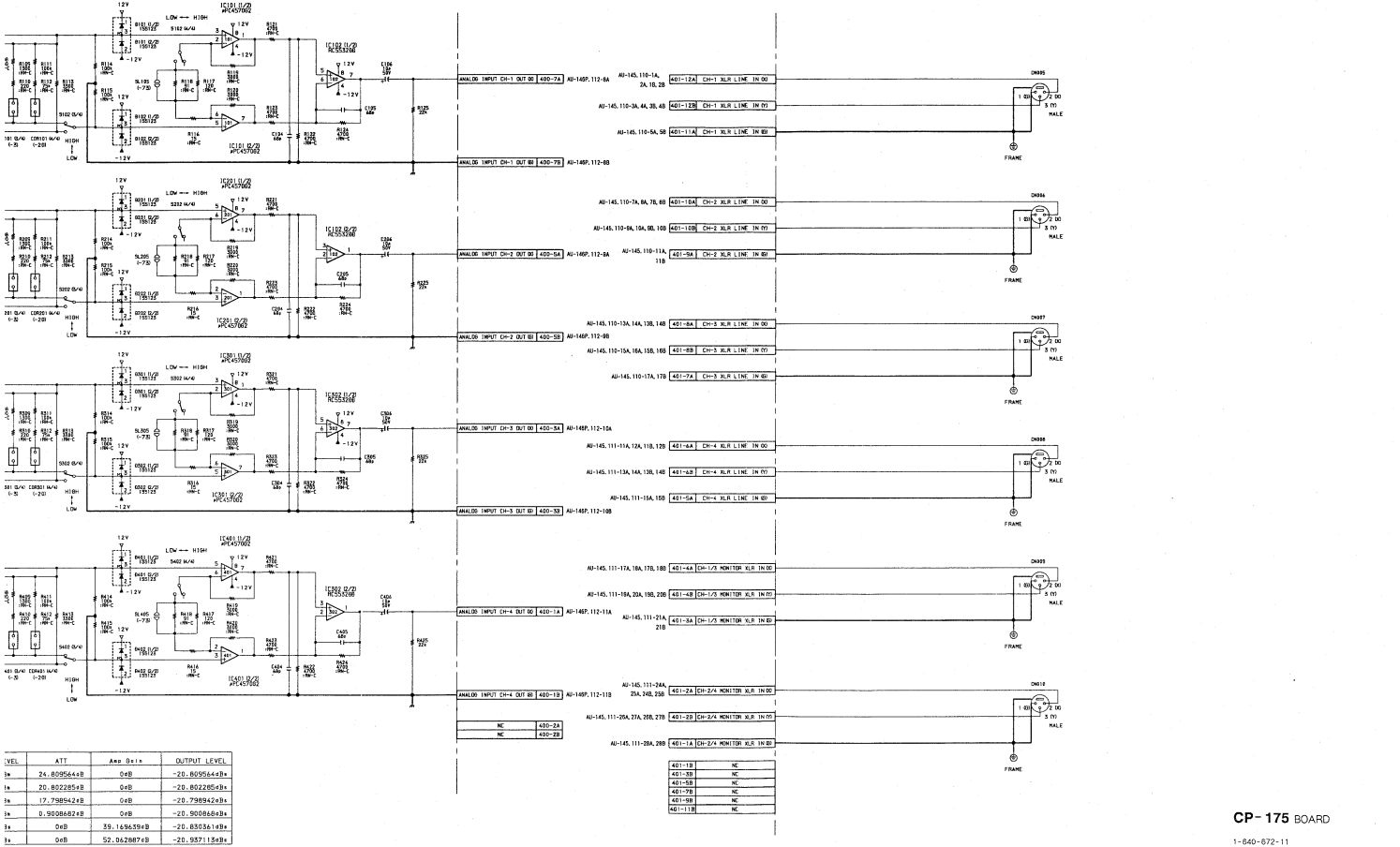

LEVEL	ATT	Ane Gain	OUTPUT LEVEL
9m	24.809564dB	0dB	-20.809564dBm
8m	20.802285dB	0dB	-20.802285dBm
9m	17.798942dB	0dB	-20.798942dBm
8m	0.900868dB	0dB	-20.900868dBm
9m	0dB	39.169639dB	-20.830361dBm
9m	0dB	52.062887dB	-20.937113dBm

CP-175 BOARD

1-640-672-11
BVW-D75PS : # 10001-

CP-185

AES/EBU, I/O Buffer, TC Balanced Amplifier

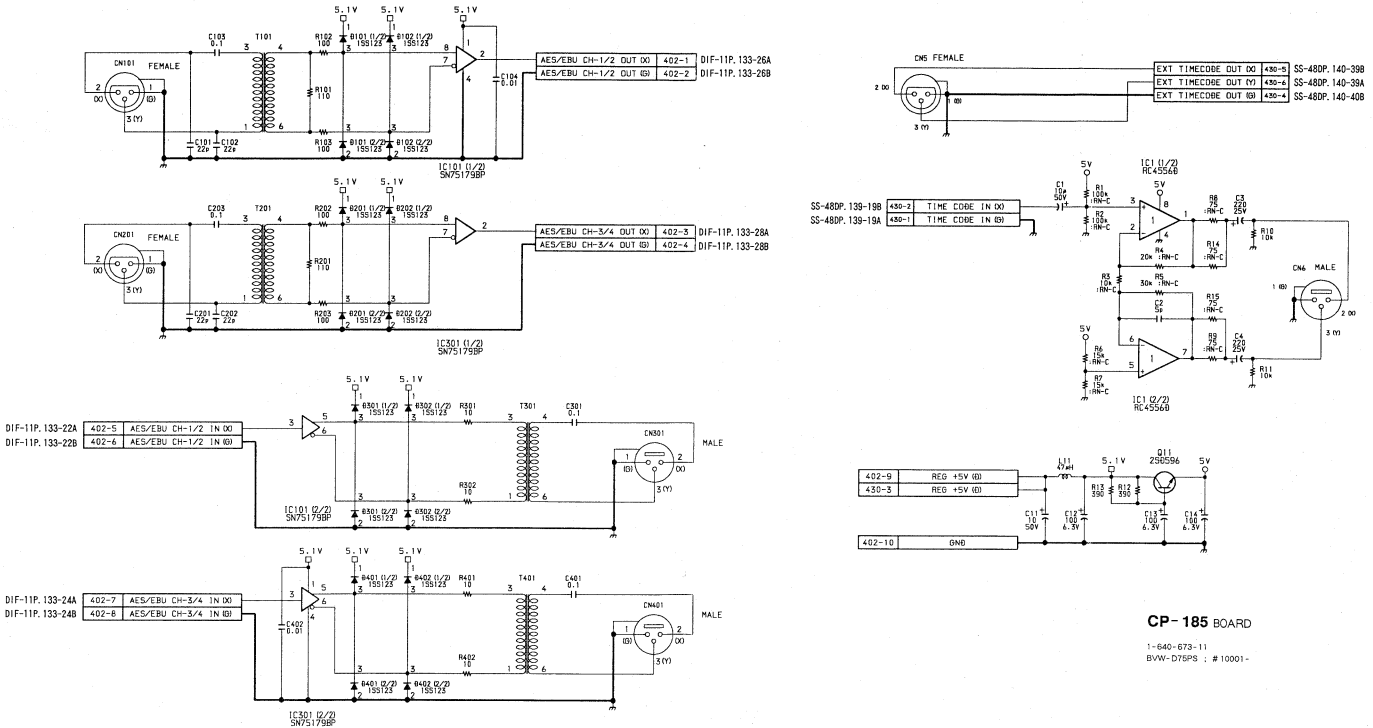

CP-185 BOARD

1-640-673-11
BVW-D75PS : #10001-

AFM-8 BOARD (1/4)
AFM Audio MOD/DEMOD

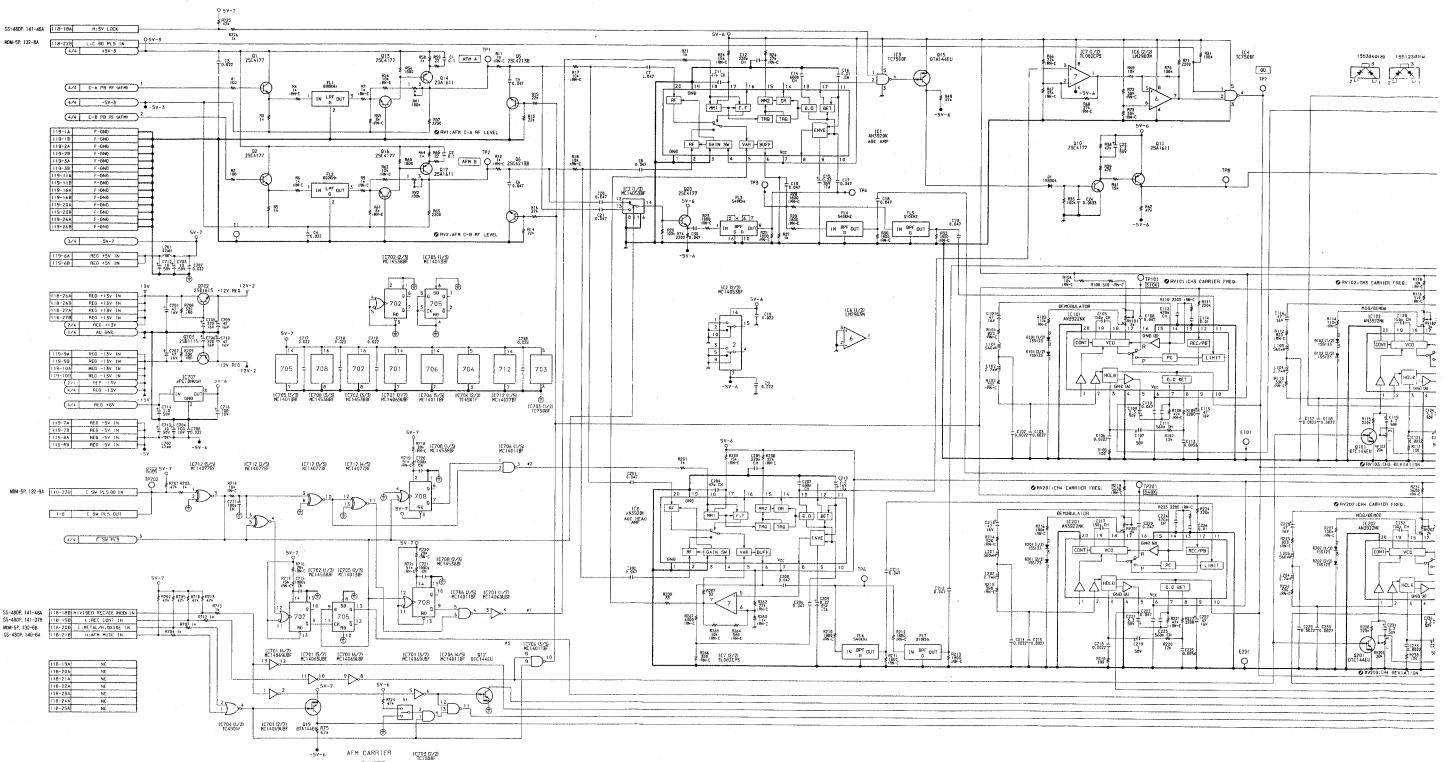

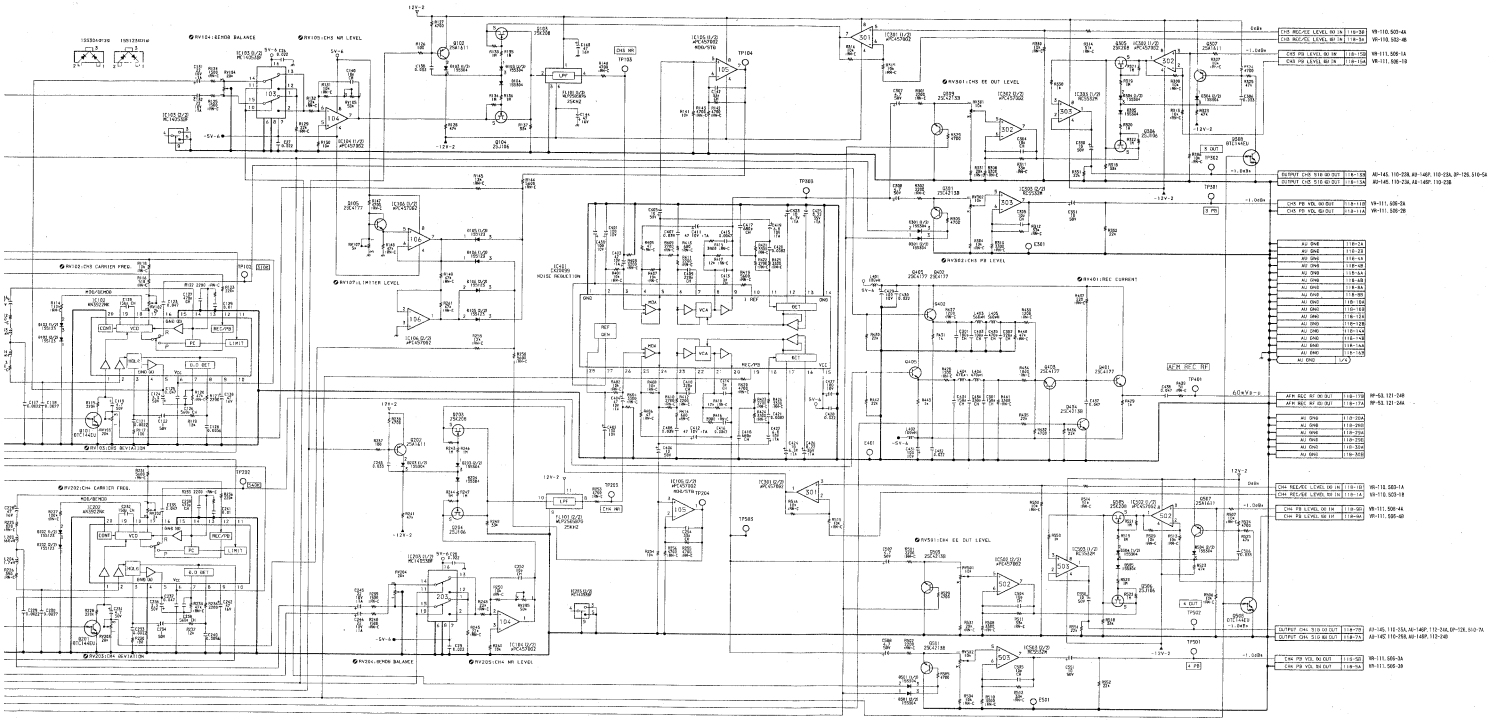

AFM-8 BOARD **(1/4)**

1-640-663-11
8VW-D75PS : # 10001-

14-59

AFM-8 BOARD (2/4) (3/4) (4/4)

AFM-8 BOARD (2/4) (3/4) (4/4)
AFM Audio MOD/DEMOD

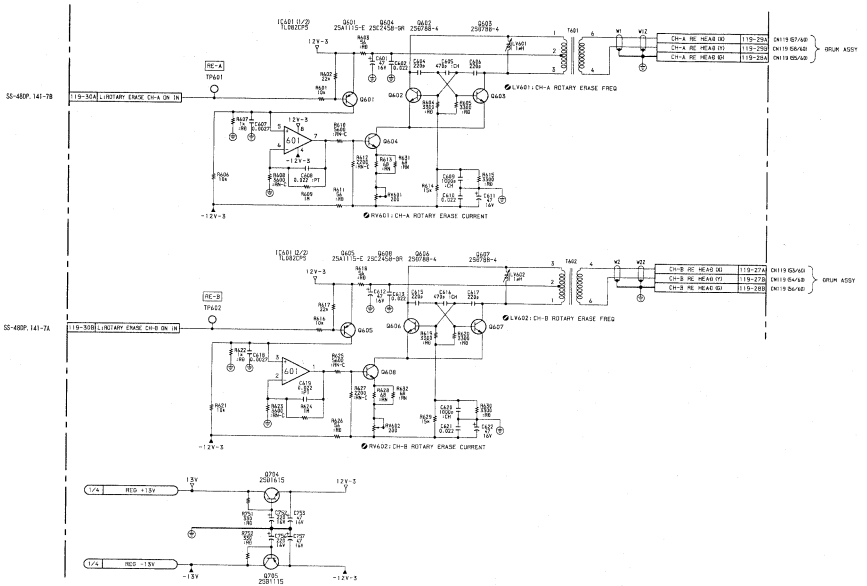

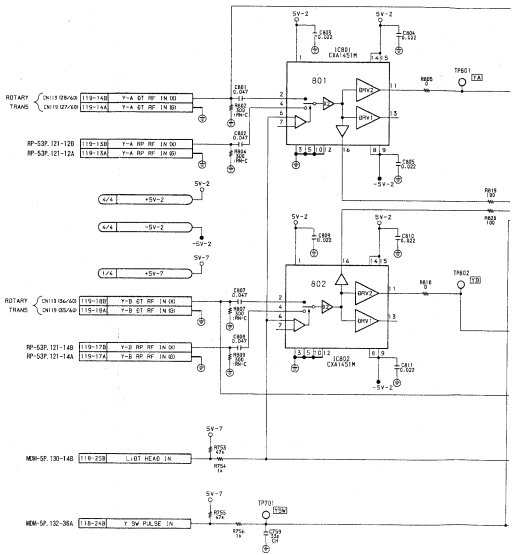

AFM-8 BOARD **(2/4)**

1-640-683-11
BVW-D75PS ; # 10001-

14-61

AFM-8 BOARD (2/4) (3/4) (4/4)

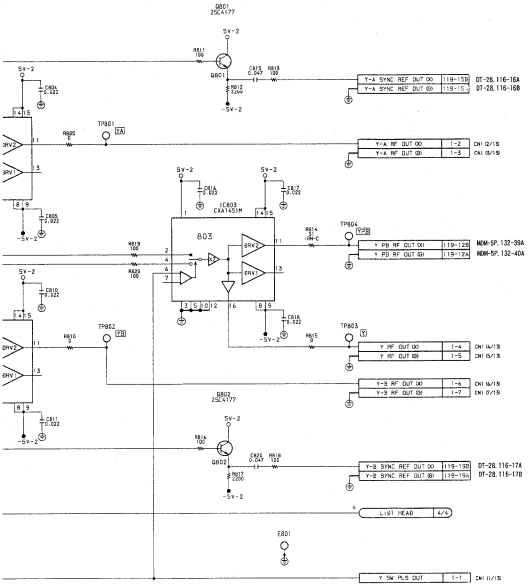

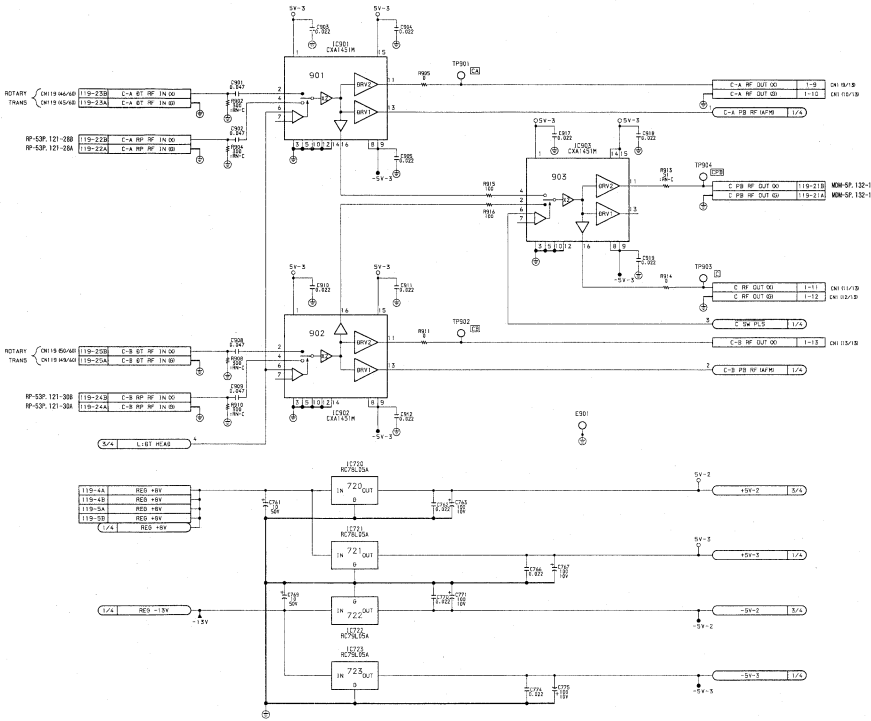

AFM-8 BOARD **(3/4)**

1-640-683-11
BVW-D75PS : # 10001-

AFM-8 BOARD **(4/4)**

1-640-683-11
BVW-D75PS : # 10001-

14-61

AU-145 BOARD (1/3)
Audio Output Amplifier

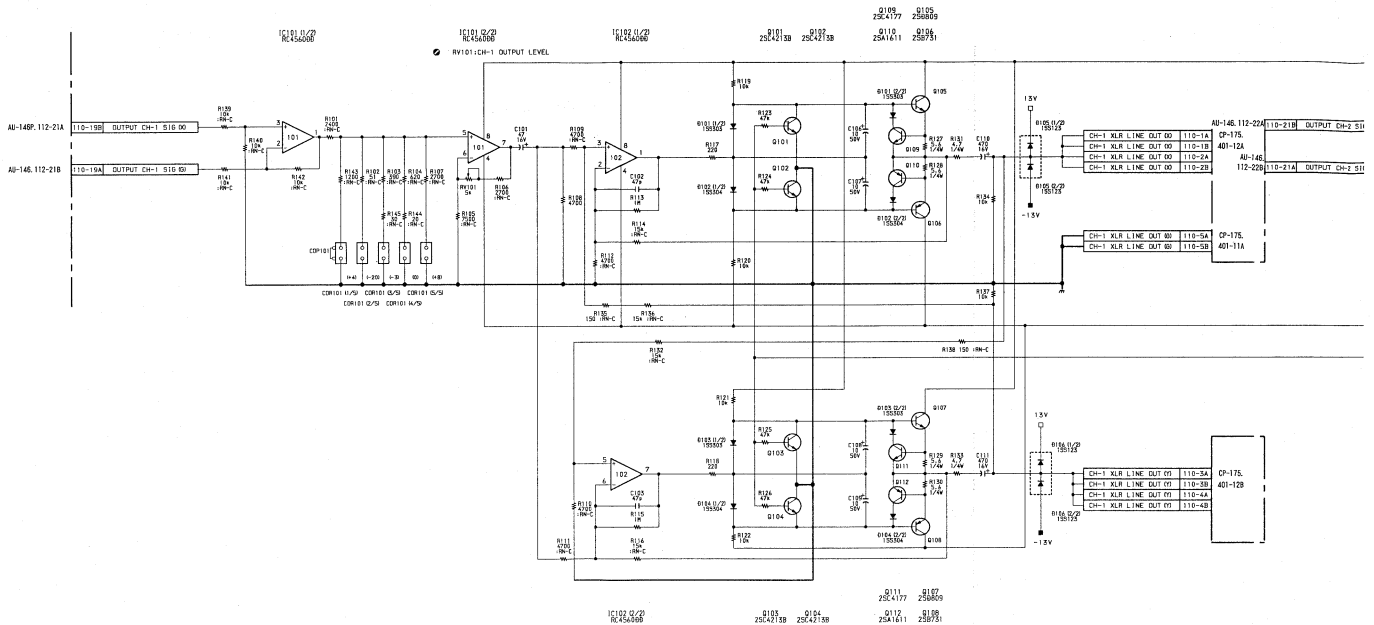

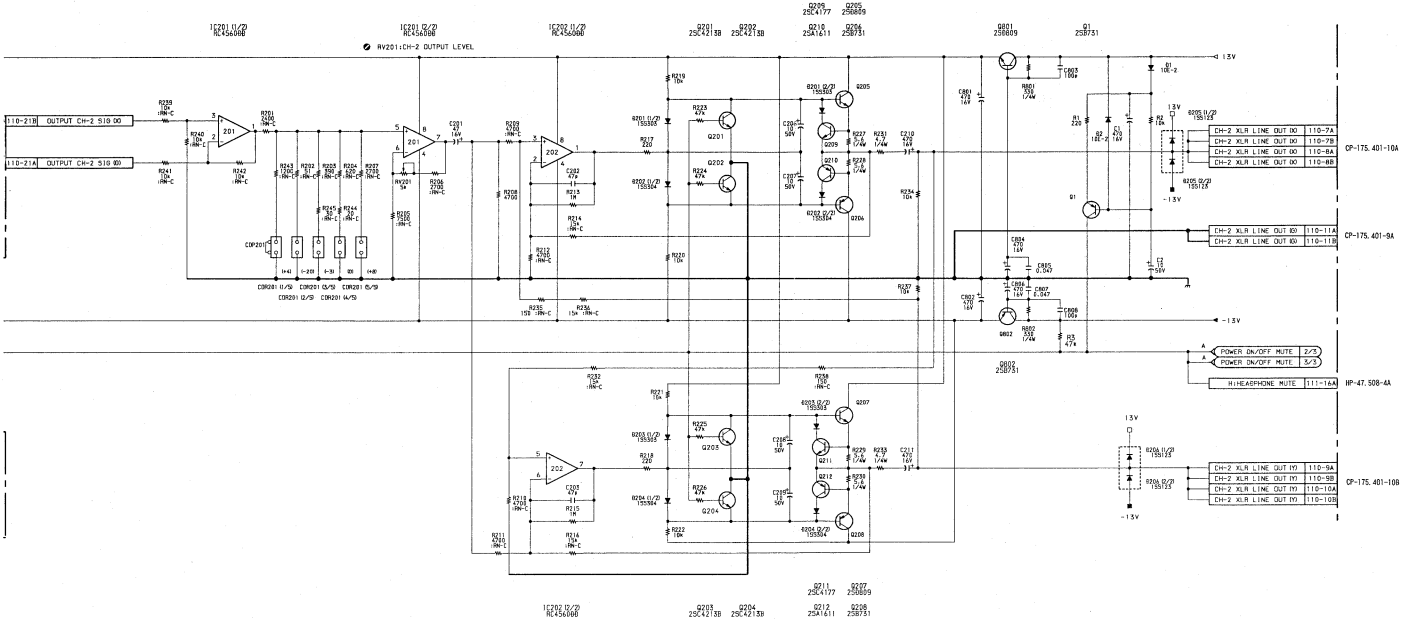

AU-145 BOARD (1/3)

1-640-679-11
BVW-D75PS : #10001-

AU-145 BOARD (2/3)
Audio Output Amplifier

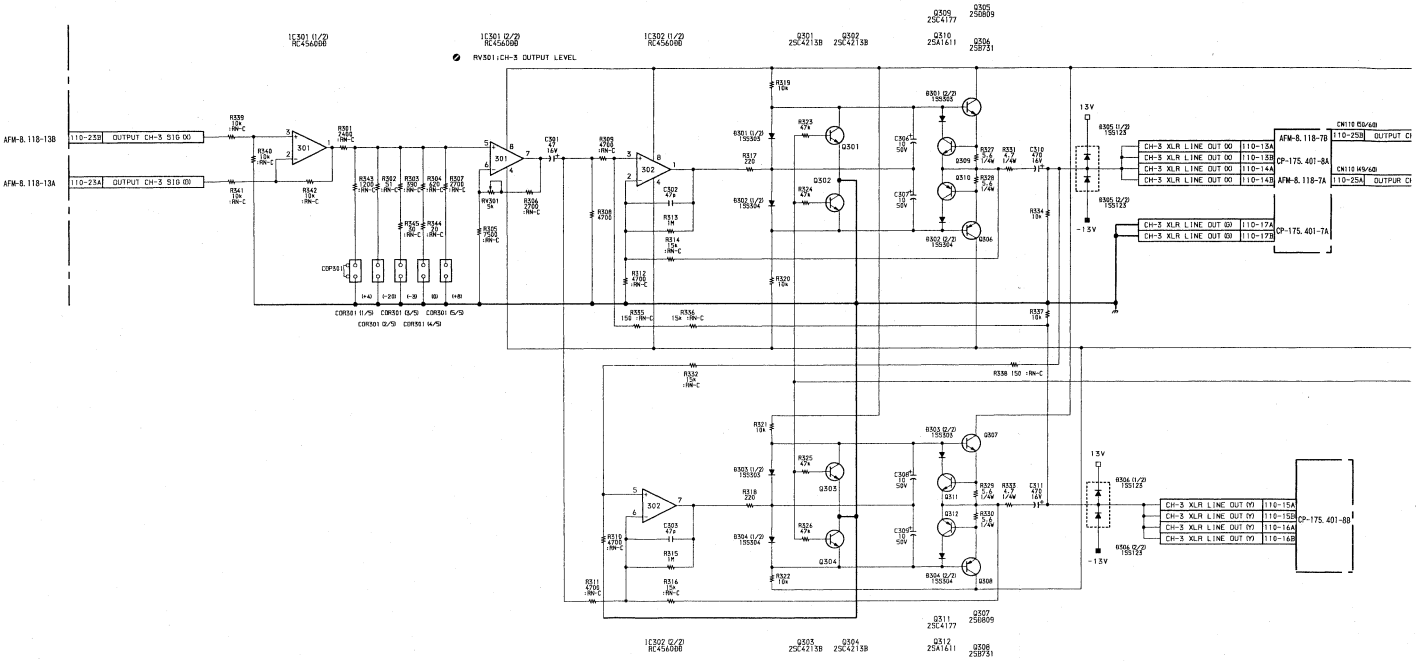

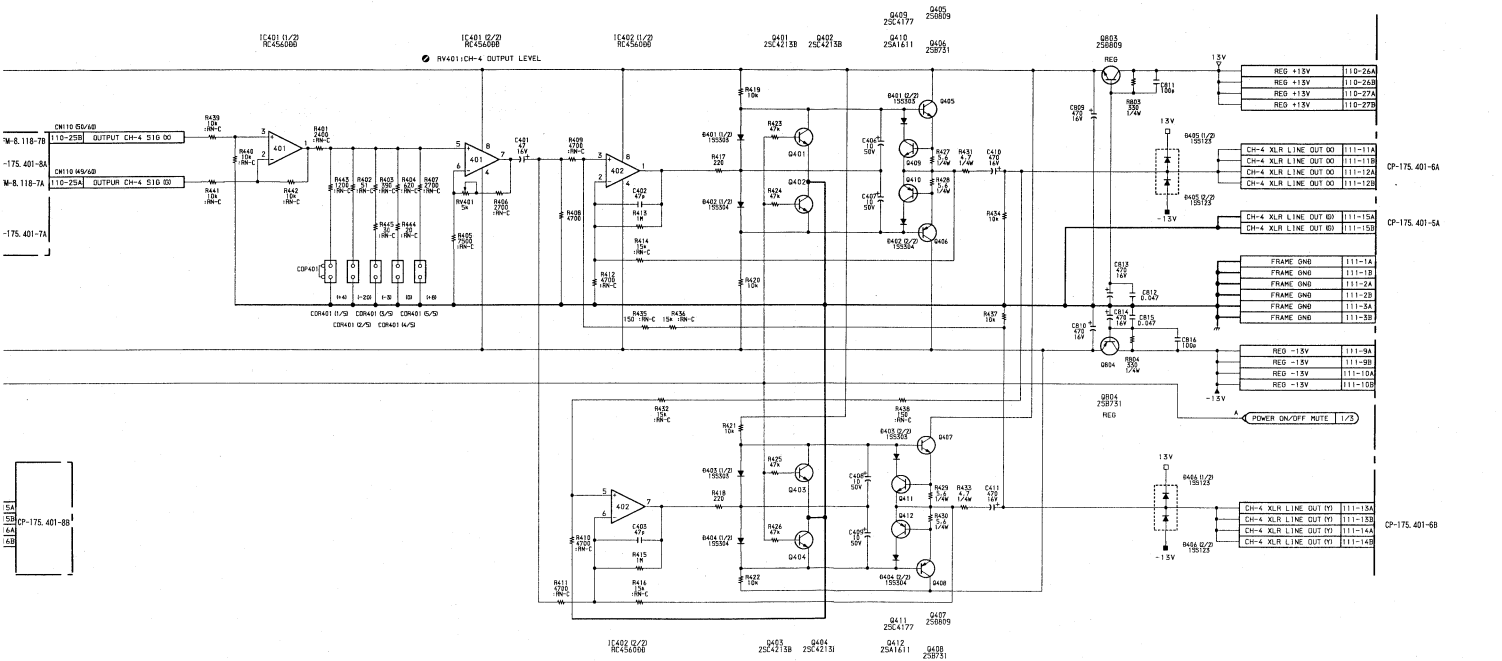

AU-145 BOARD (2/3)

1-640-679-11
BVW-D75PS ; # 10001-

14-65

AU-145 (3/3)
Audio Output Amplifier

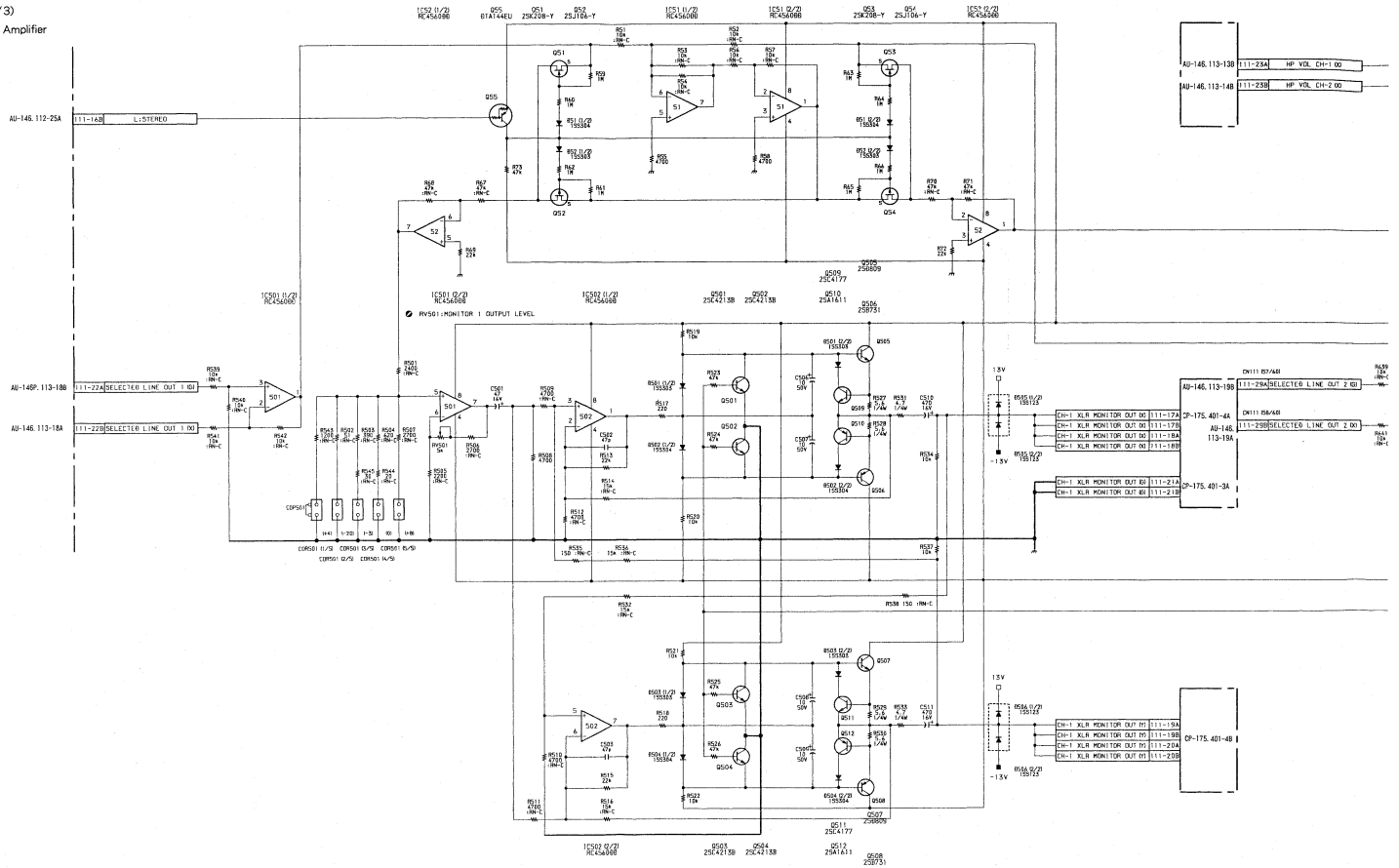

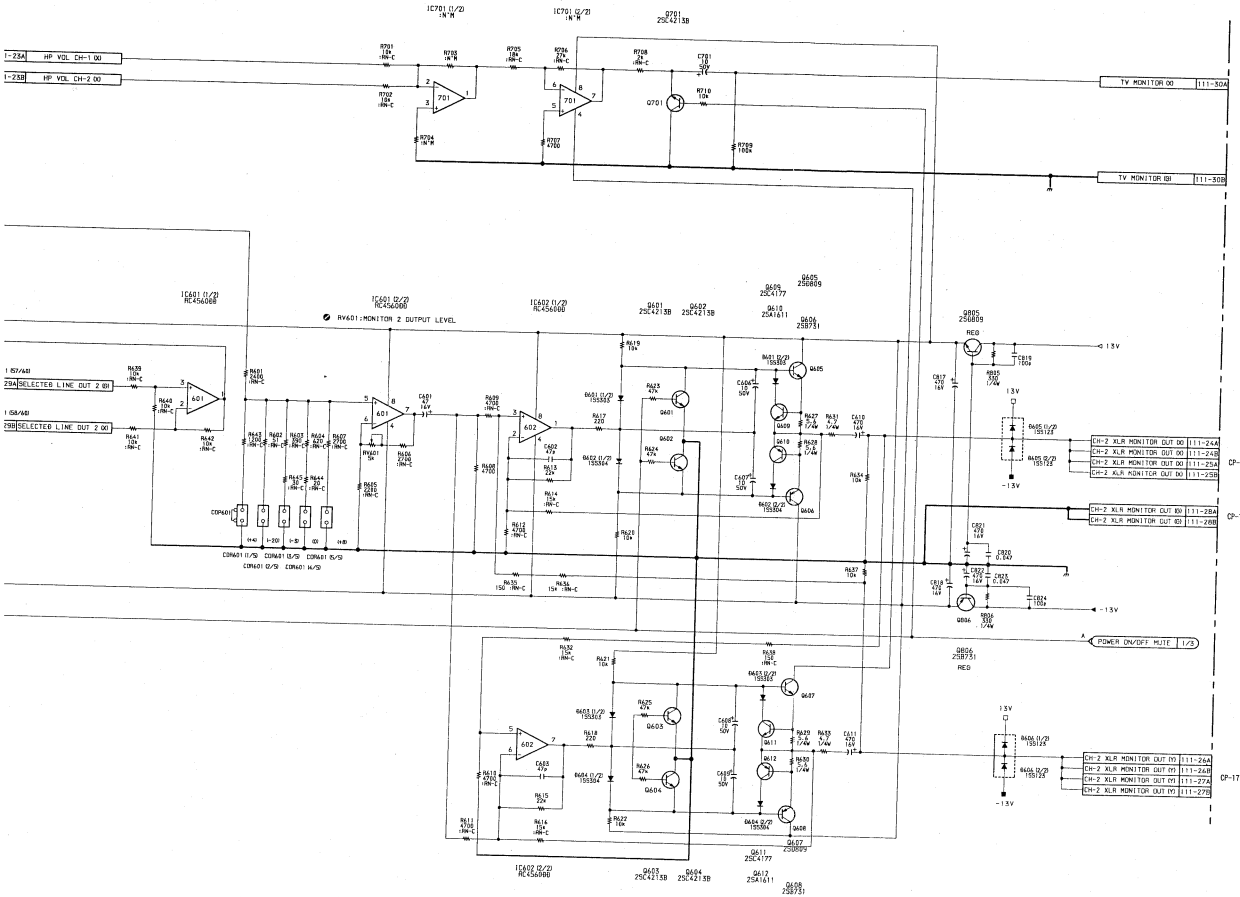

AU-145 BOARD (3/3)

1-640-679-11
BVW-D75PS : # 10001-

AU-146P BOARD (1/5)
Audio PB Process

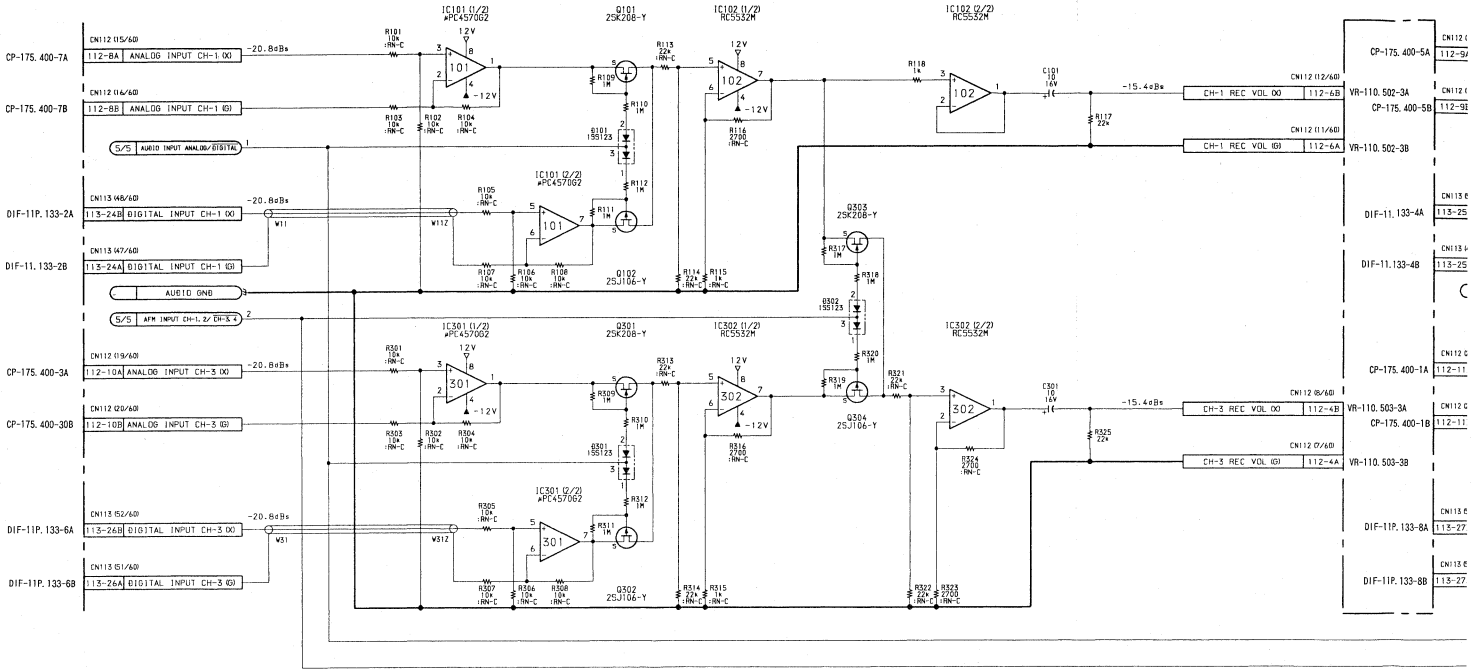

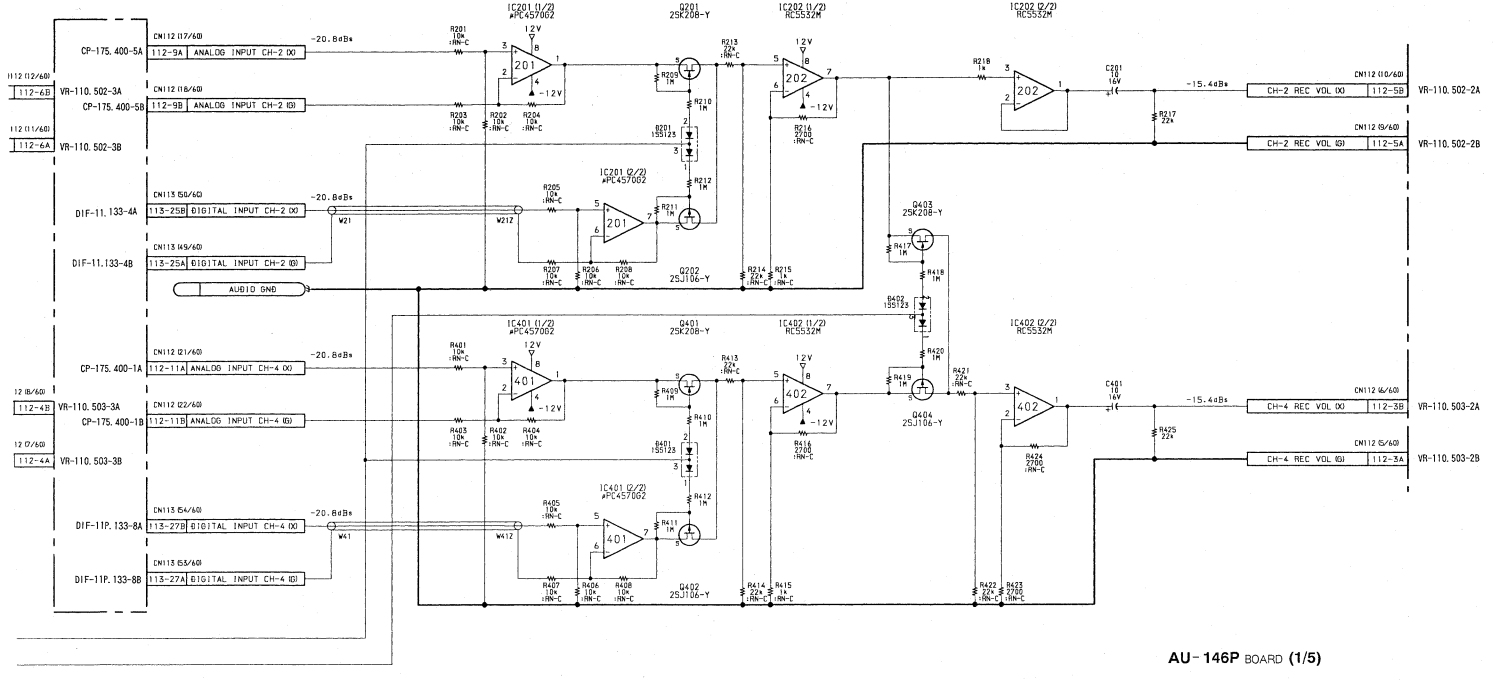

AU-146P BOARD (1/5)

1-640-680-11
BVW-D75PS : #10001-

AU-146P BOARD (2/5)

AU-146P BOARD (2/5)

Audio PB Process

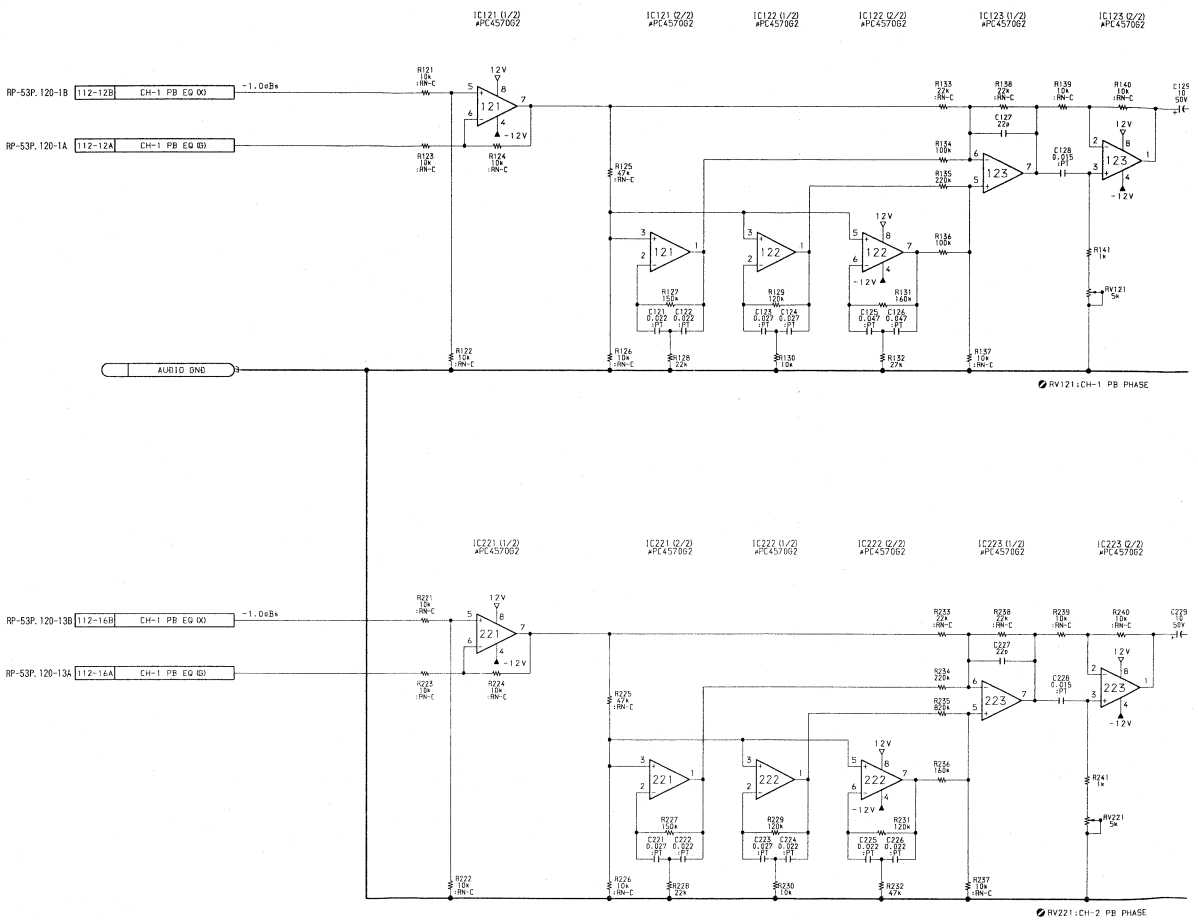

AU-146P BOARD (2/5)

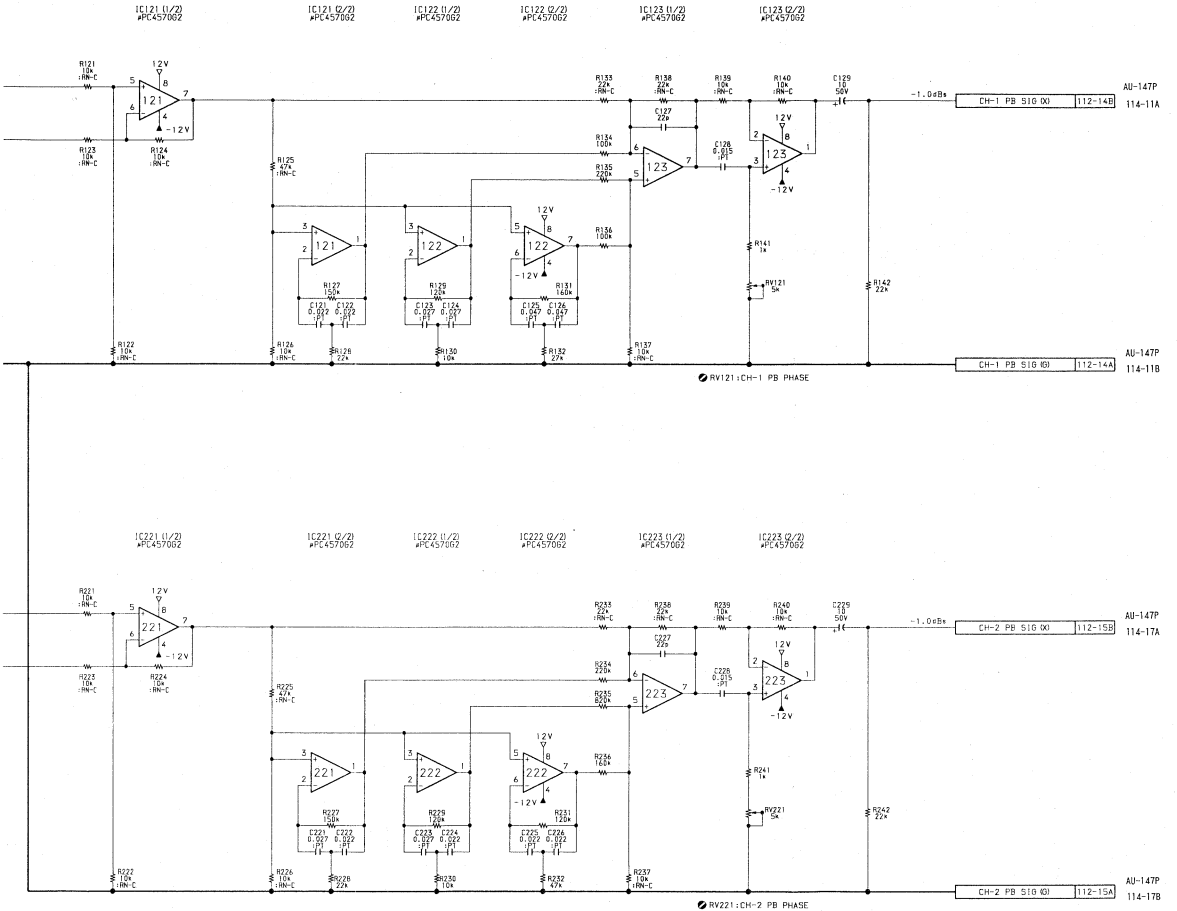

AU-146P BOARD (2/5)

1-640-680-11
BVW-D75PS ; #10001-

14-71

AU-146P BOARD (3/5)
Audio PB Process

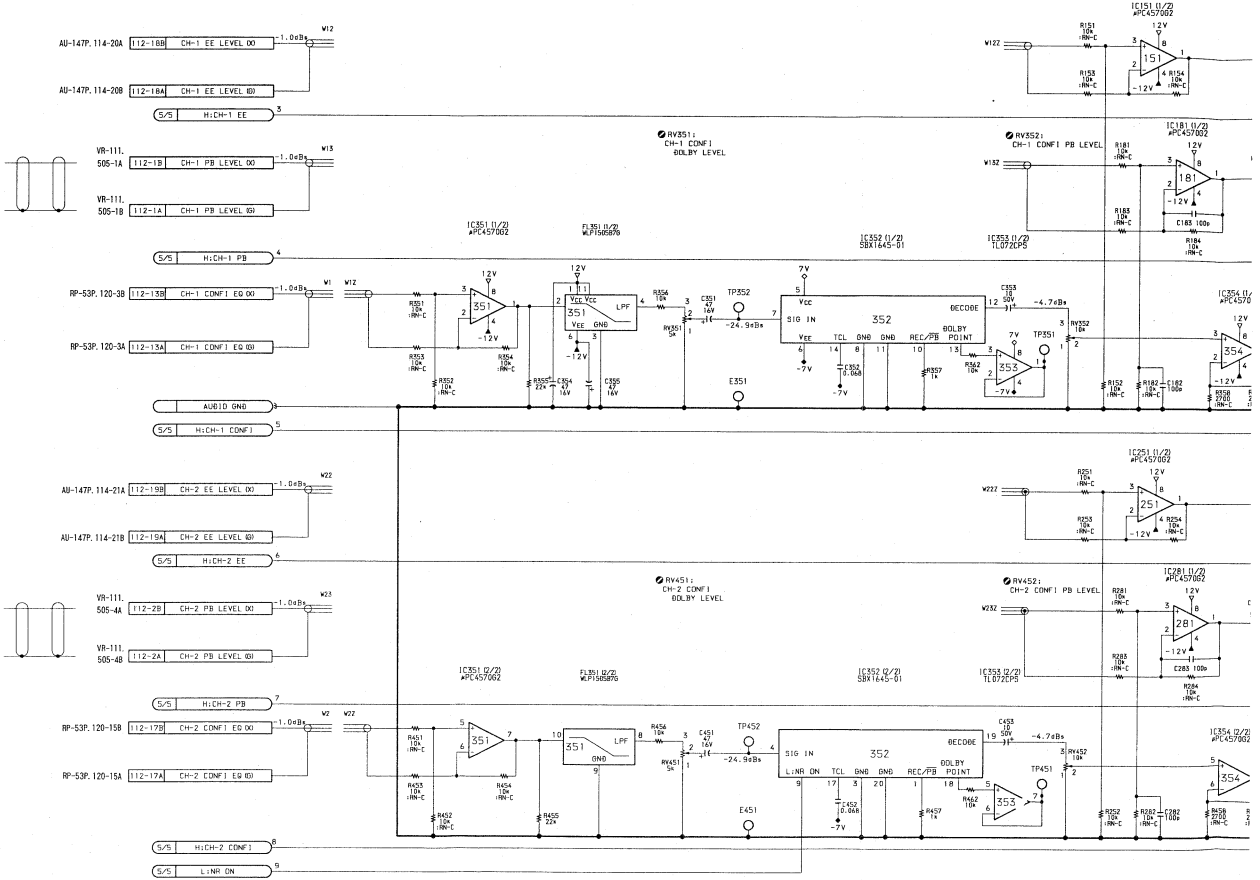

14-73

14-73

A | B | C | D | E | F | G | H

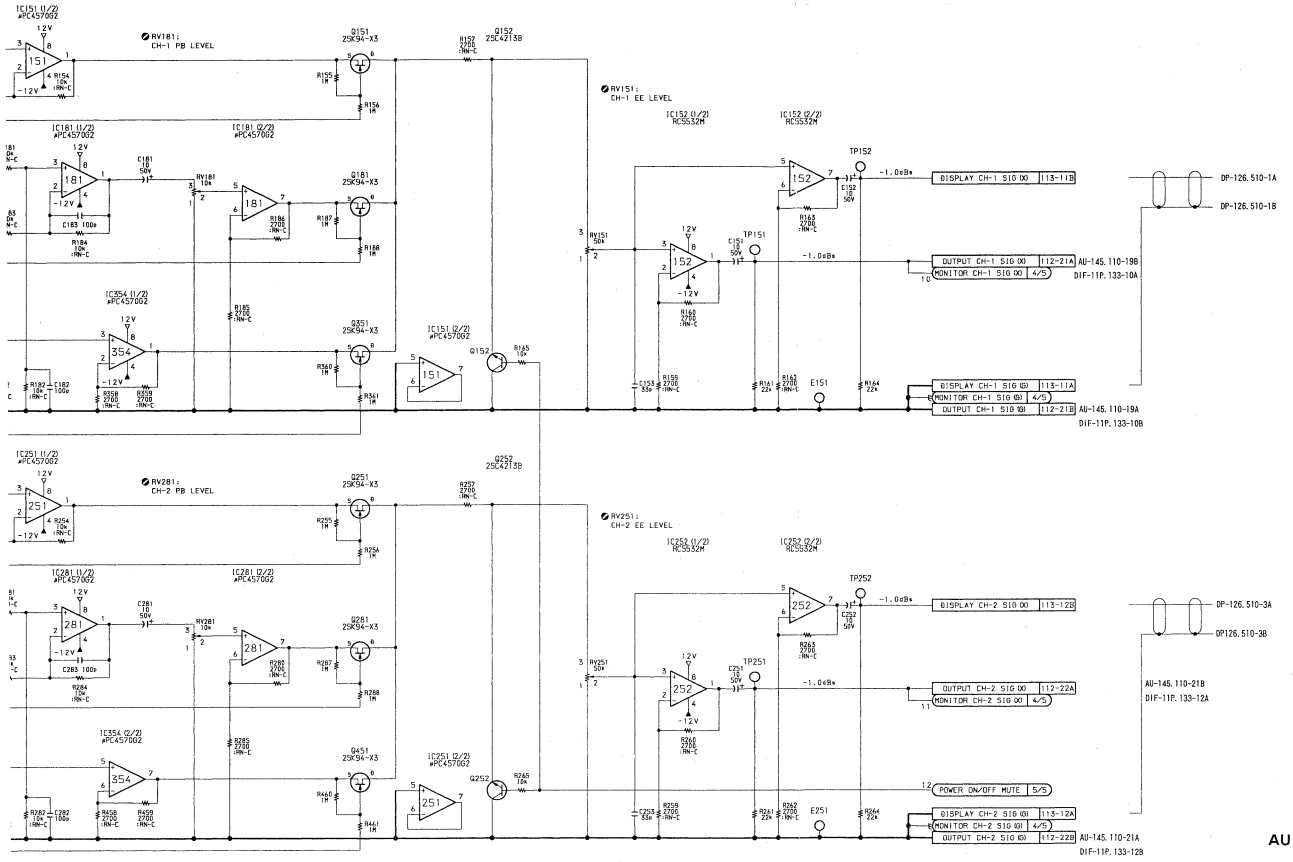

AU-146P BOARD (3/5)

1-640-680-11
BVW-D75PS ; #10001-

14-73

AU-146P BOARD (4/5)
Audio PB Process

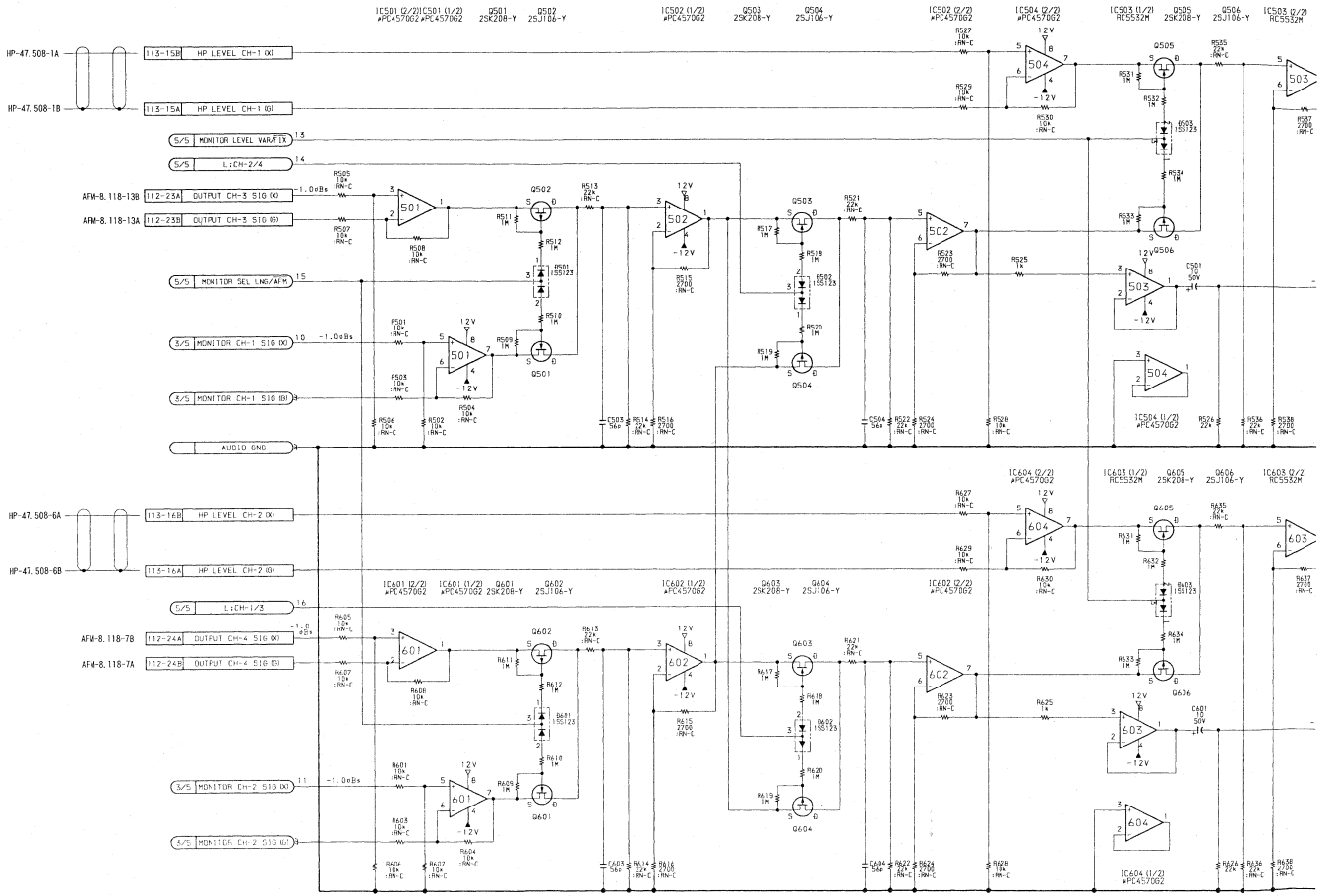

AU-146P BOARD (4/5)

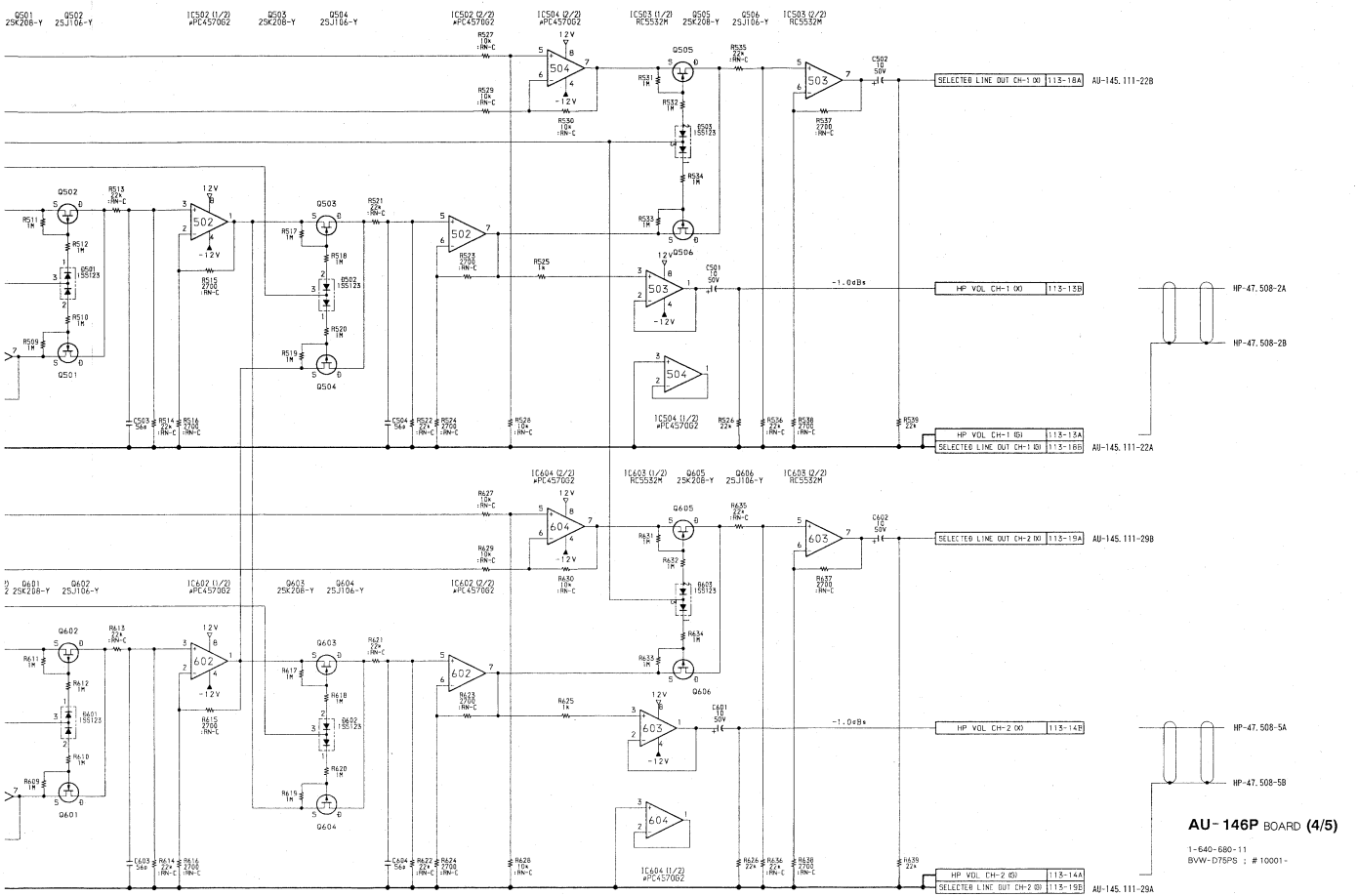

AU-146P BOARD **(4/5)**

1-640-680-11
BVW-D75PS : #10001-

14-75

AU-146P BOARD (5/5)
Audio PB Process

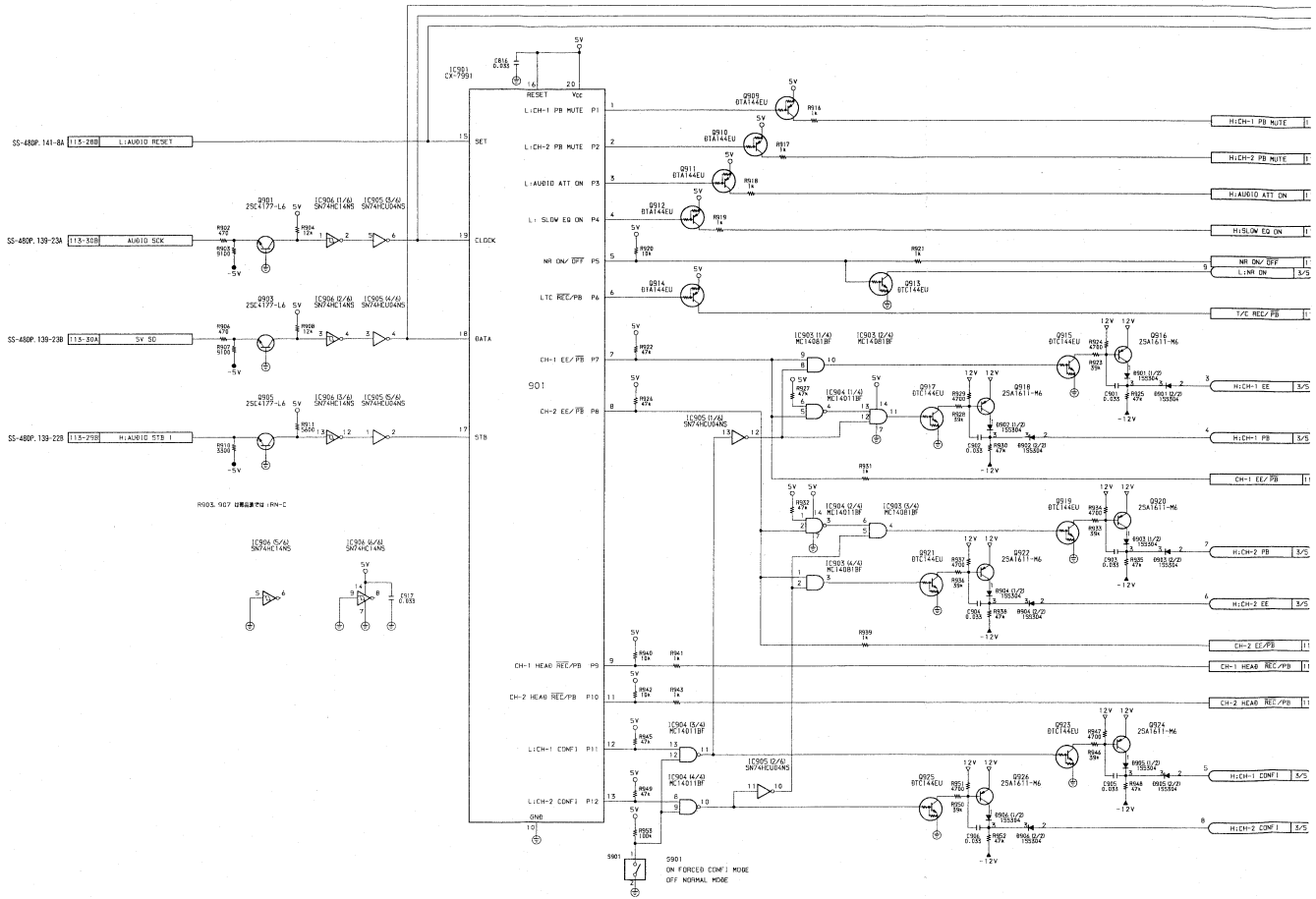

14-77

14-77

A | B | C | D | E | F | G | H

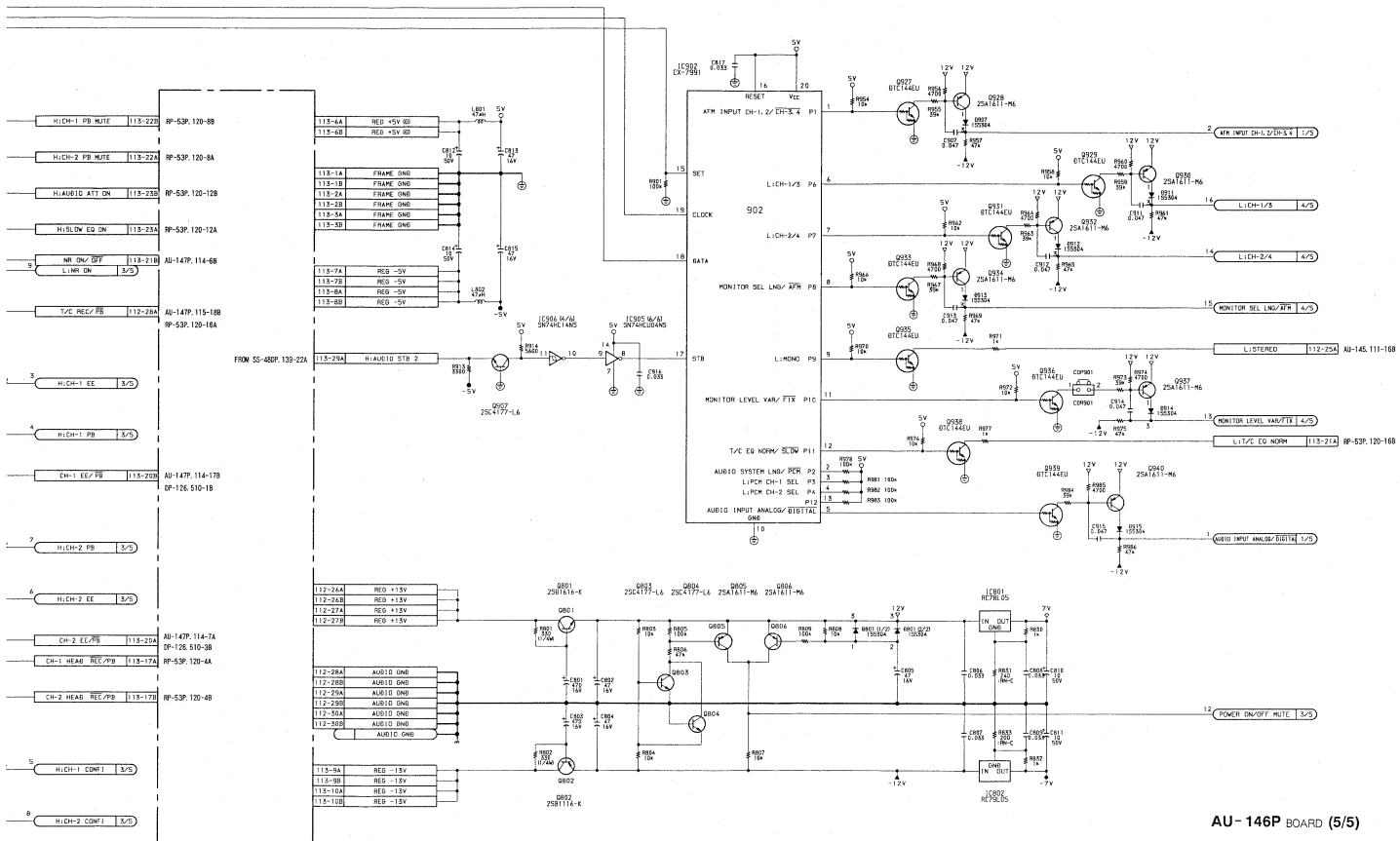

AU-146P BOARD (5/5)

1-640-680-11
BVW-D75PS ; # 10001-

AU-147P BOARD (1/4)

Audio REC Process DOLBY-C

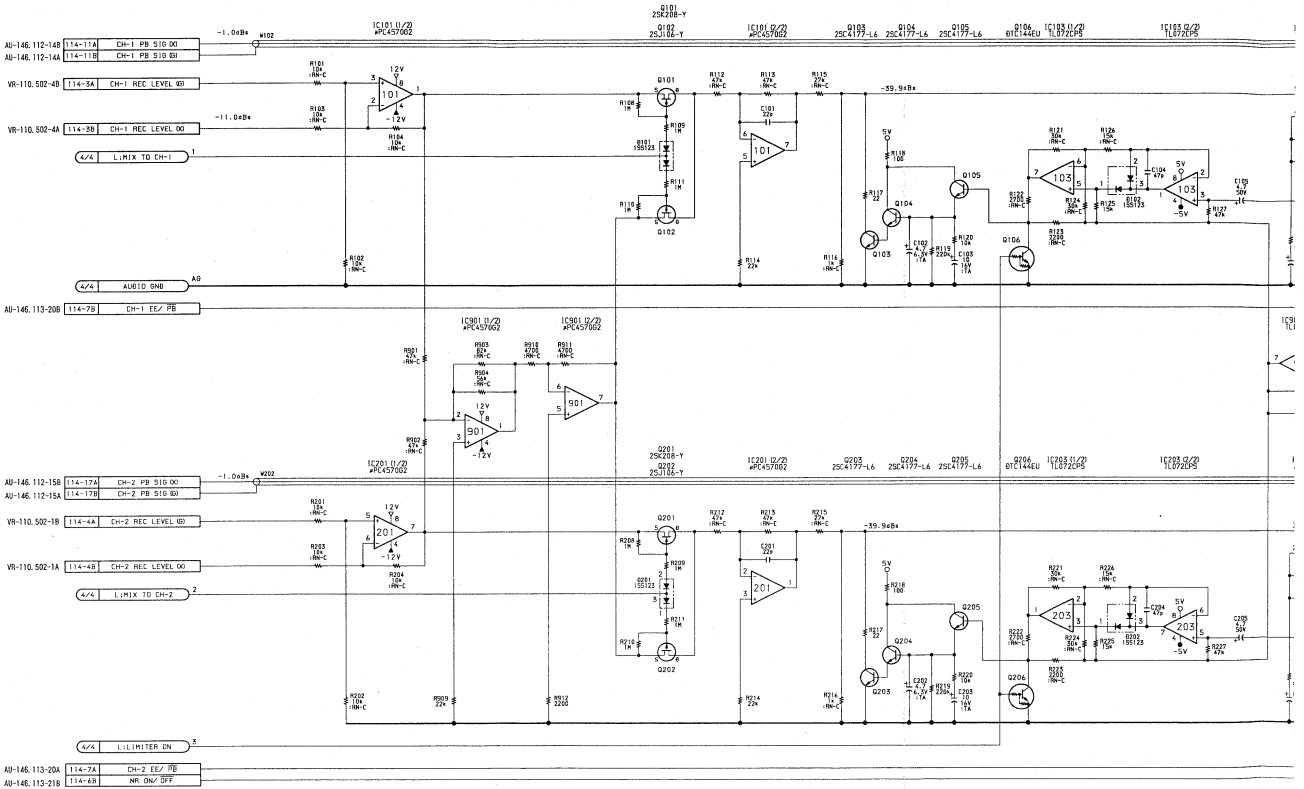

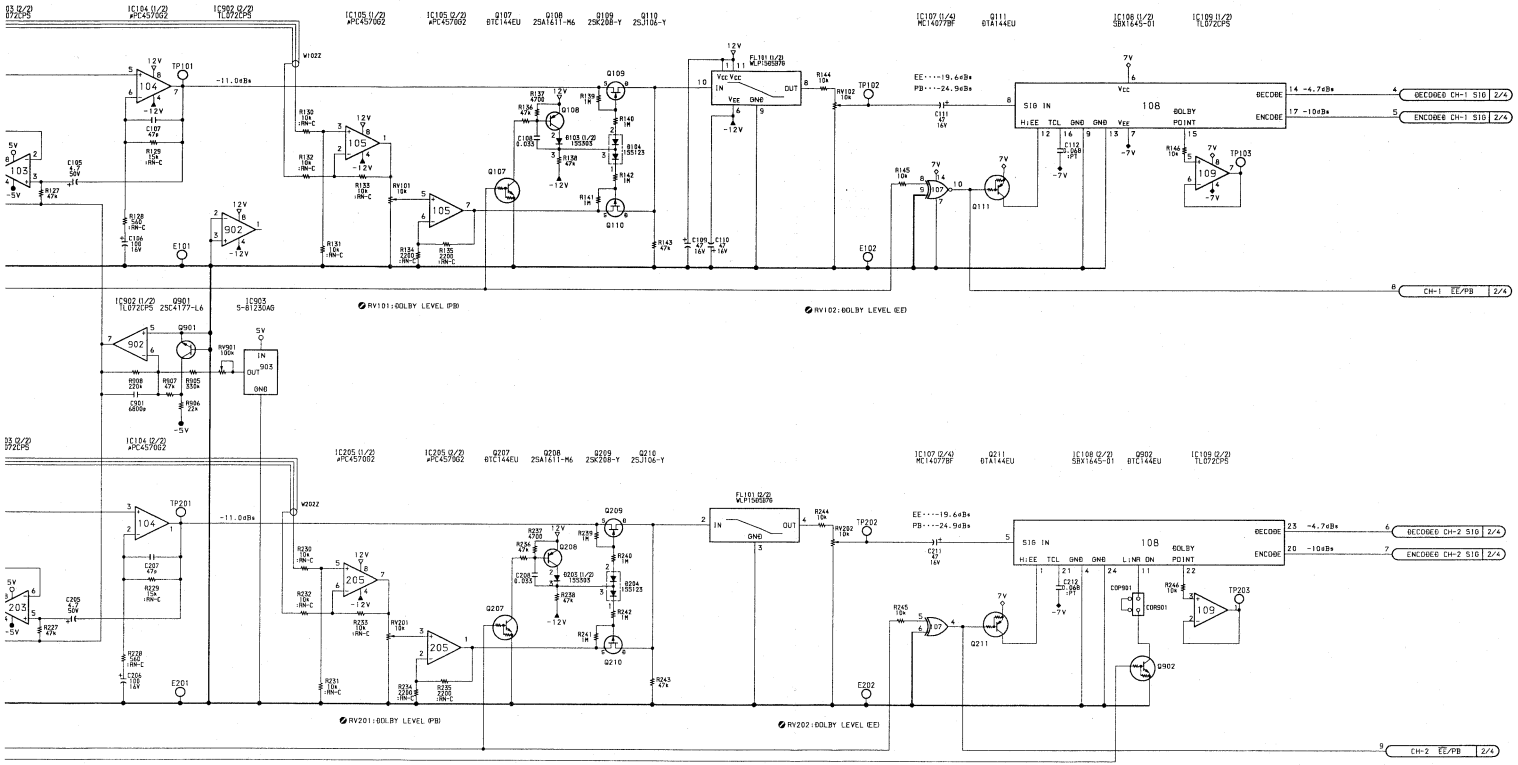

AU-147P BOARD (1/4)

1-640-681-11
BVW-D75PS ; # 10001-

AU-147P (2/4), DUS-475 BOARD

AU-147P BOARD (2/4)
Audio REC Process DOLBY-C
DUS-475 BOARD
REC Mute

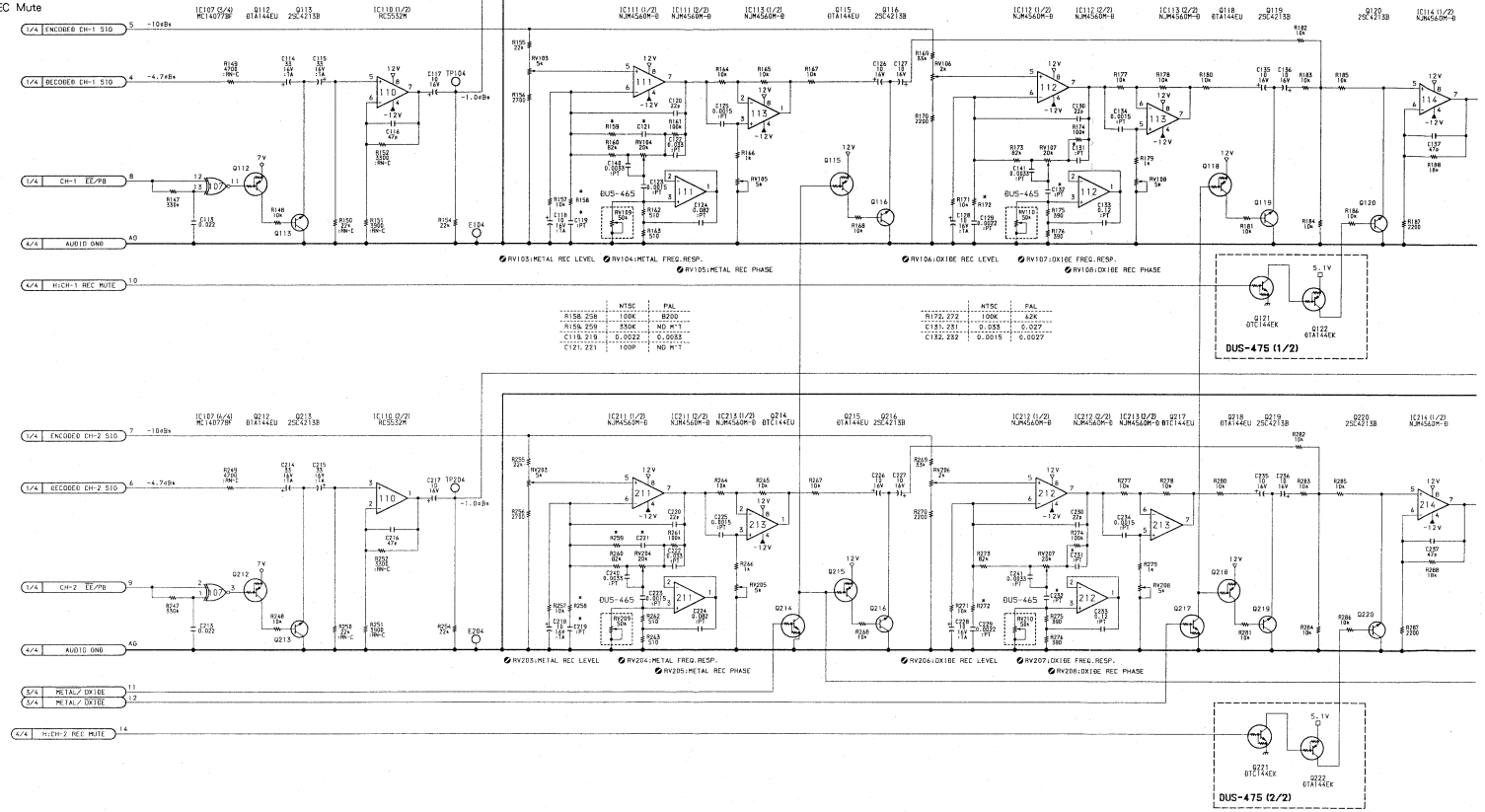

	NTSC	PAL
R158, 258	100K	820Ω
R159, 259	330K	NO M'T
C119, 219	0.0022	0.0033
C121, 221	100P	NO M'T

	NTSC	PAL
R172, 272	100K	62K
C181, 281	0.033	0.027
C182, 282	0.0015	0.0027

14-81

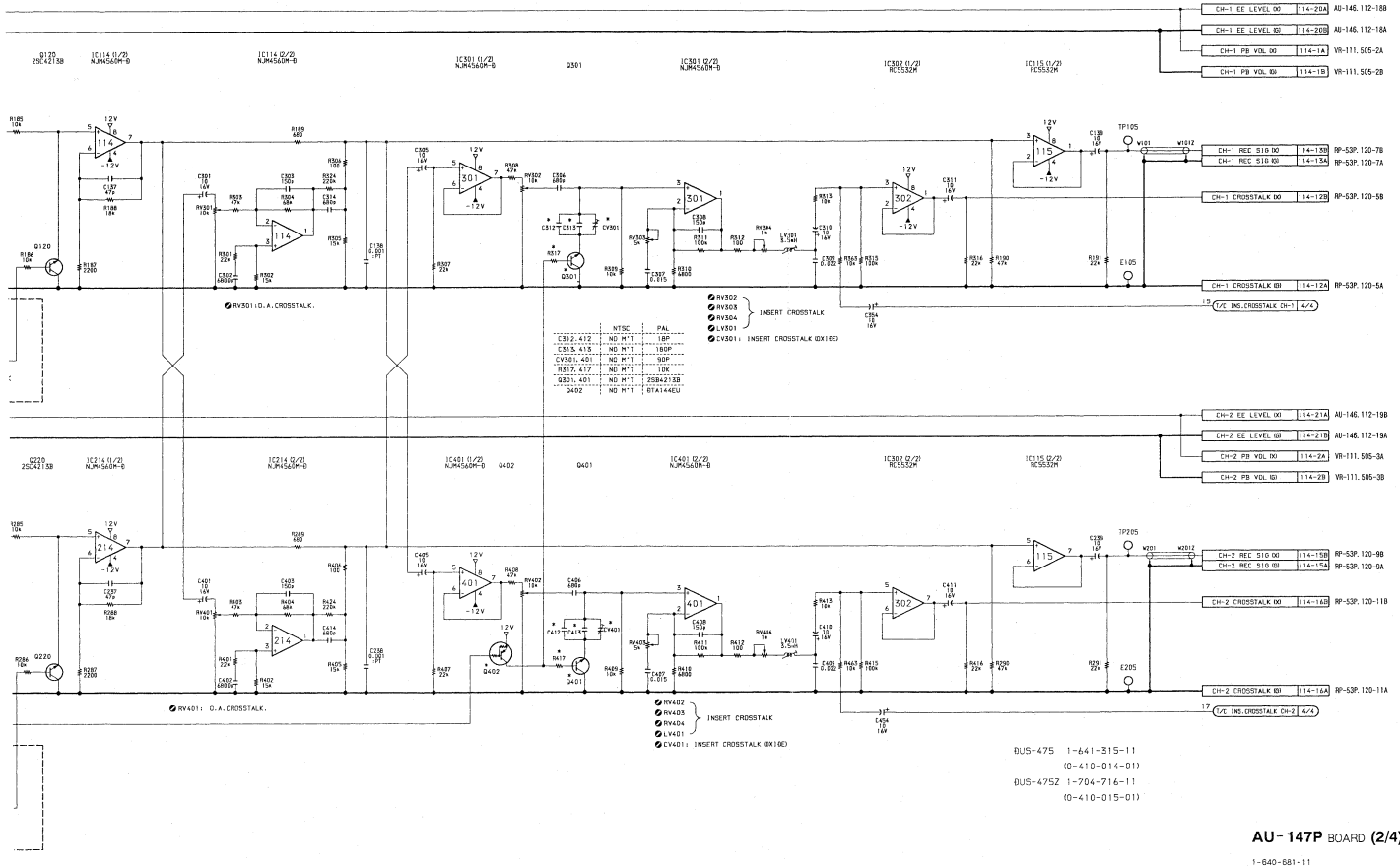

AU-147P BOARD (2/4)

1-640-681-11
BVW-D75PS : #10001-

AU-147P BOARD (3/4)

AU-147P BOARD (3/4)

Audio REC Process DOLBY-C

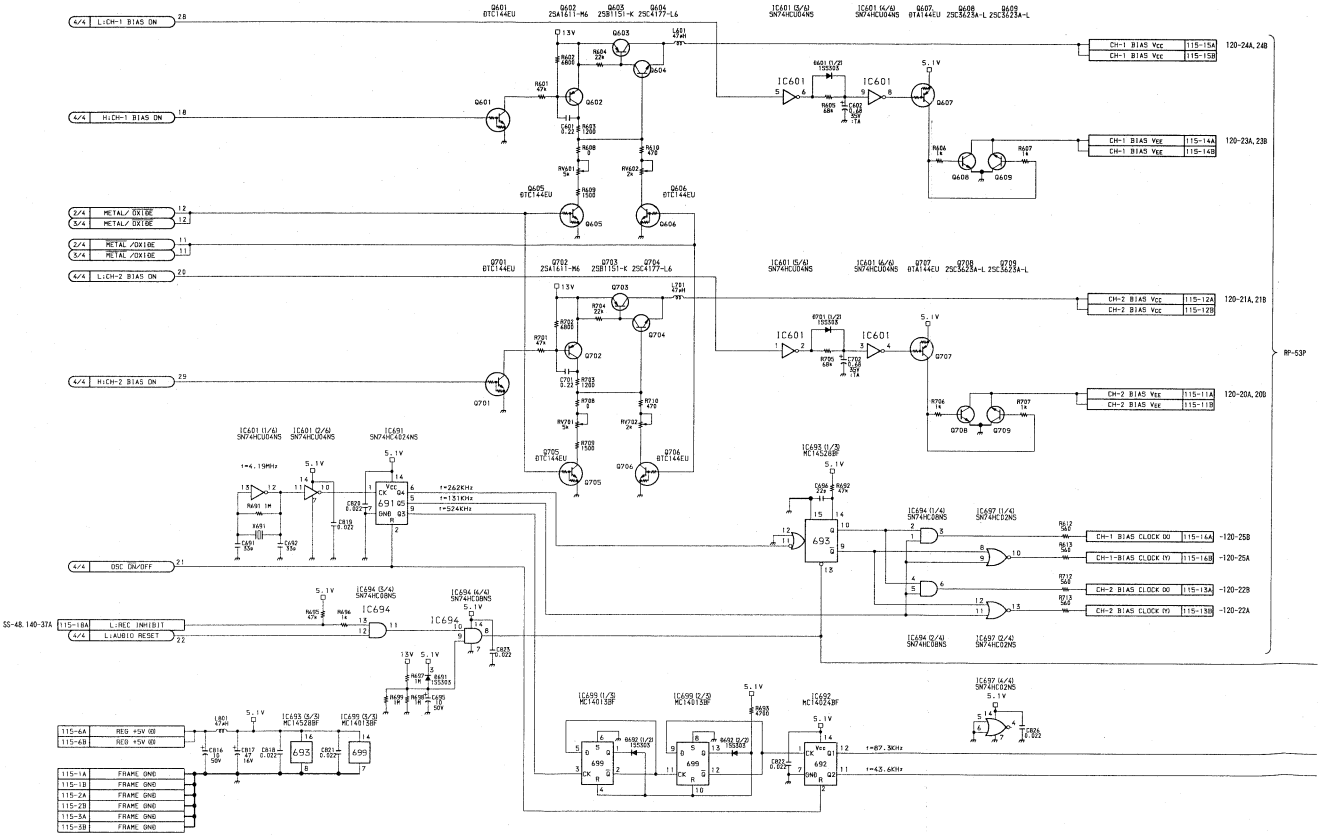

14-83

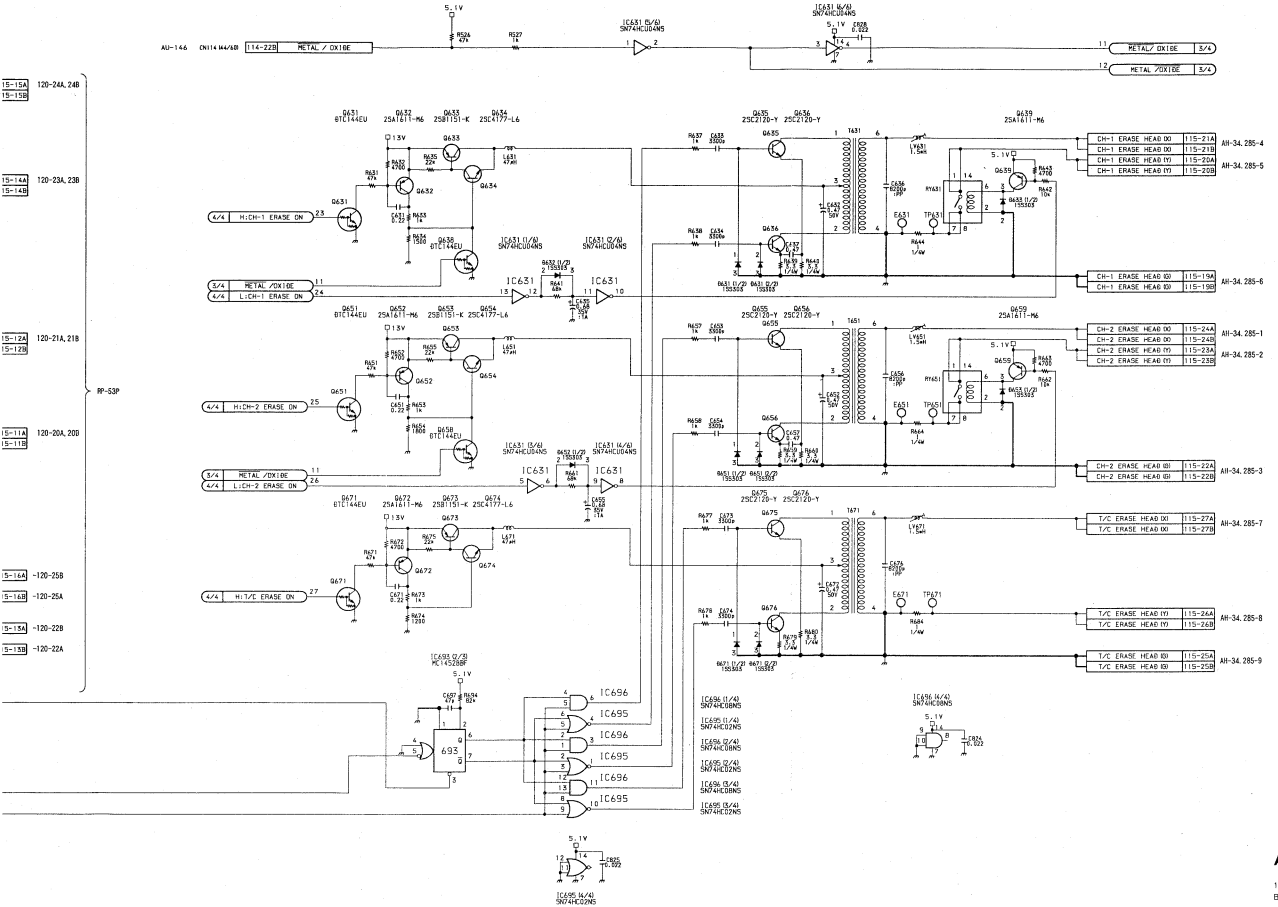

AU-147P BOARD **(3/4)**

1-640-681-11
BVW-D75PS ; # 10001-

AU-147P (4/4), DUS-465, HP-47 BOARD

AU-147P BOARD (4/4)
Audio REC Process DOLBY-C
DUS-465 BOARD
T/C Insert Crosstalk Level ADJ.
HP-47 BOARD
Headphones Amplifier

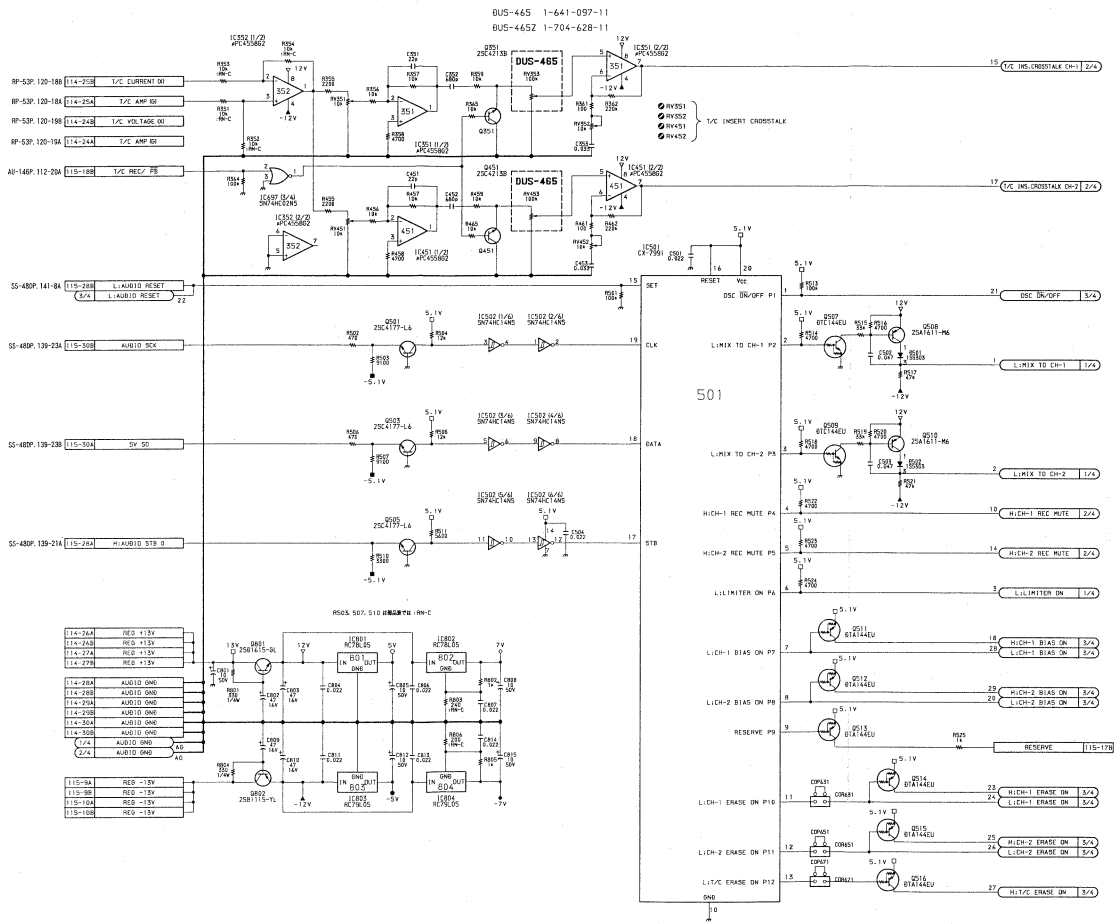

14-85

AU-147P (4/4), DUS-465, HP-47 BOARD

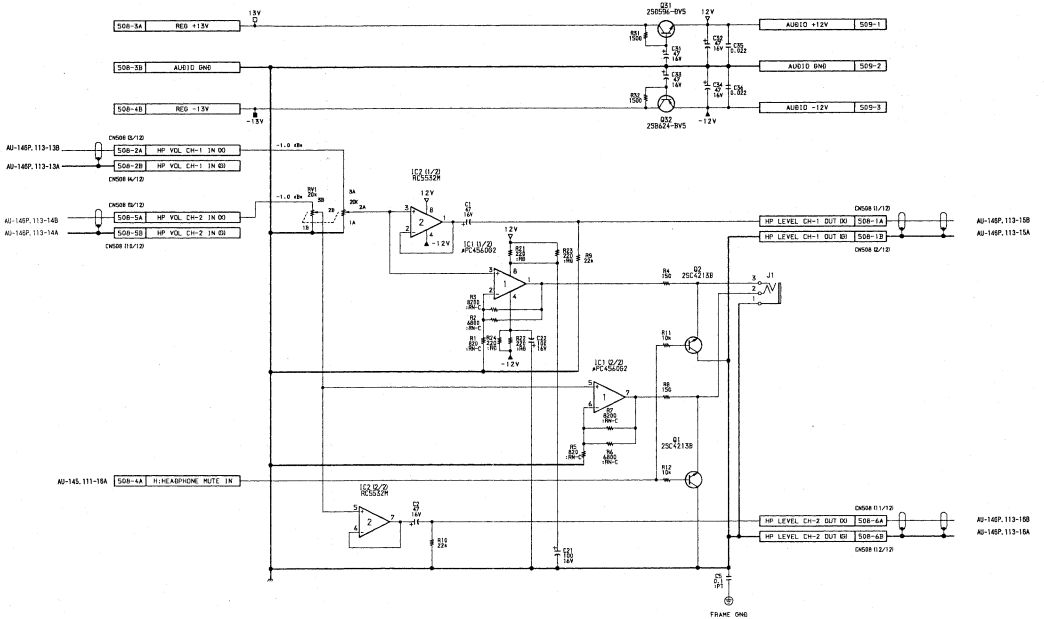

HP-47 BOARD

1-640-692-11
BVW-D75PS ; # 10001-

AU-147P BOARD **(4/4)**

1-640-681-11
BVW-D75PS ; # 10001-

14-85

VR-110 BOARD
Recording Level VR
VR-111 BOARD
Playback Level VR

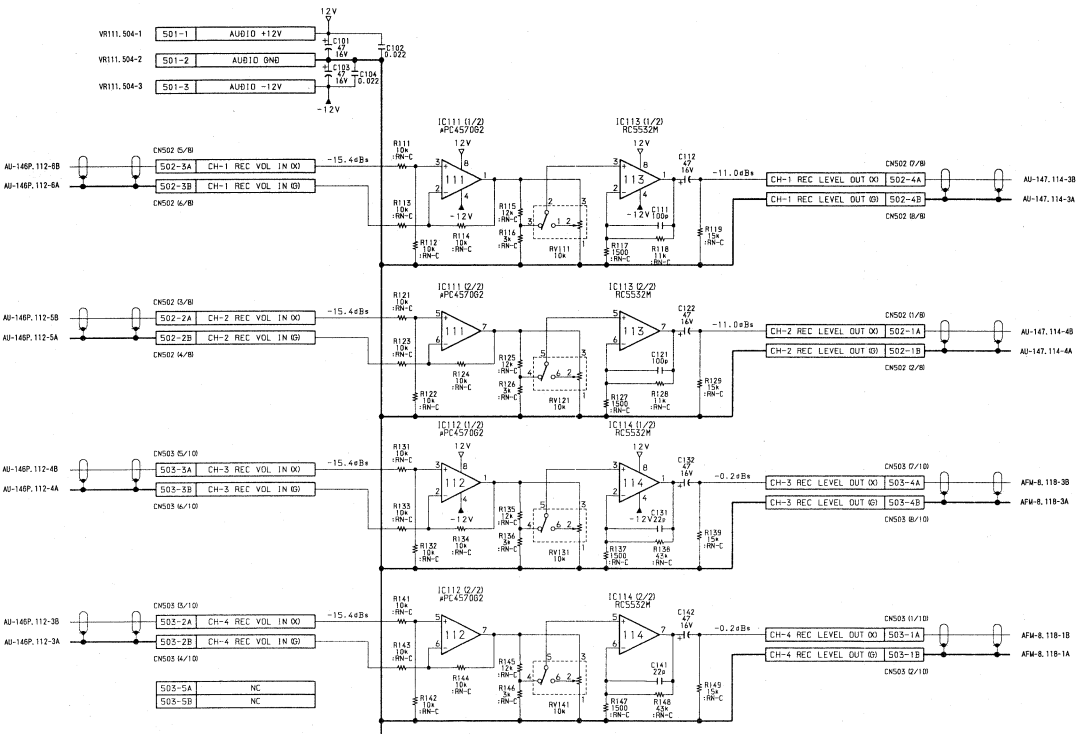

VR-110 BOARD

1-640-665-11
BVW-D75PS : # 10001-

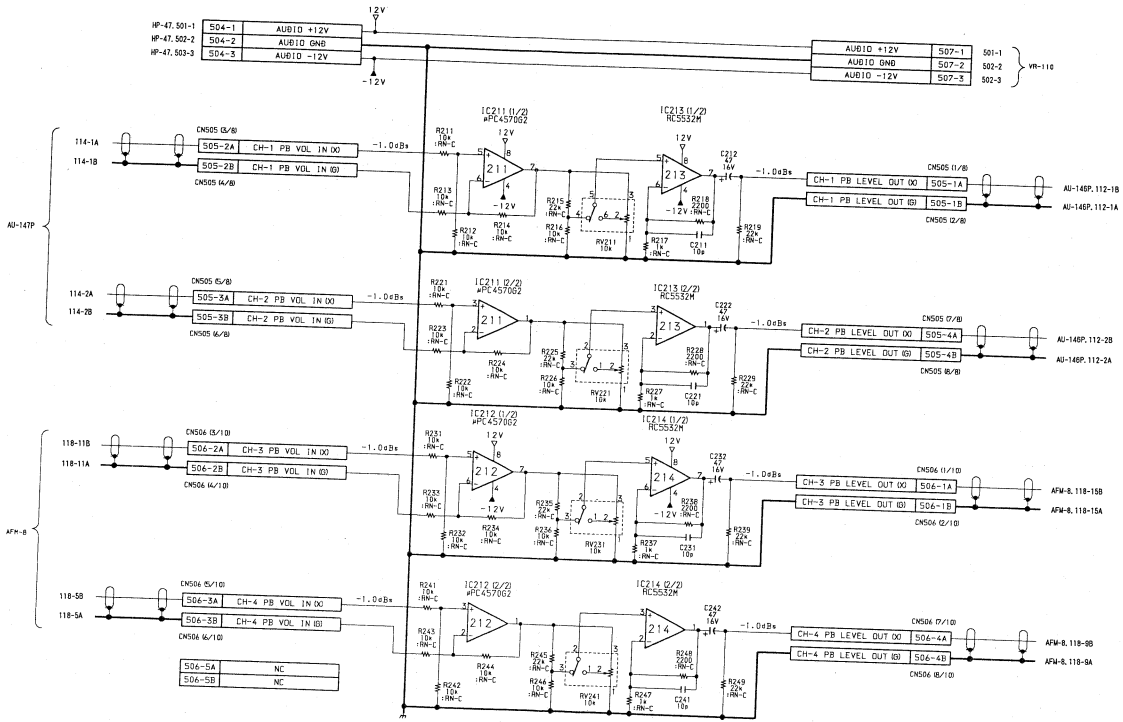
VR-111 BOARD
1-640-666-11
BVW-D75PS : # 10001-
AU-147P
AFM-8
CH-1 PB VOL IN (X)
CH-1 PB VOL IN (G)
CH-2 PB VOL IN (X)
CH-2 PB VOL IN (G)
CH-3 PB VOL IN (X)
CH-3 PB VOL IN (G)
CH-4 PB VOL IN (X)
CH-4 PB VOL IN (G)
CH-1 PB LEVEL OUT (X)
CH-1 PB LEVEL OUT (G)
CH-2 PB LEVEL OUT (X)
CH-2 PB LEVEL OUT (G)
CH-3 PB LEVEL OUT (X)
CH-3 PB LEVEL OUT (G)
CH-4 PB LEVEL OUT (X)
CH-4 PB LEVEL OUT (G)
AUDIO +12V
AUDIO GND
AUDIO -12V
NC
IC211 (1/2) μPC4570G2
IC212 (1/2) μPC4570G2
IC213 (1/2) RC5532M
IC214 (1/2) RC5532M
IC211 (2/2) μPC4570G2
IC212 (2/2) μPC4570G2
IC213 (2/2) RC5532M
IC214 (2/2) RC5532M
-1.0dBs
+12V
-12V

14-87

DP-126 BOARD
Level Meter

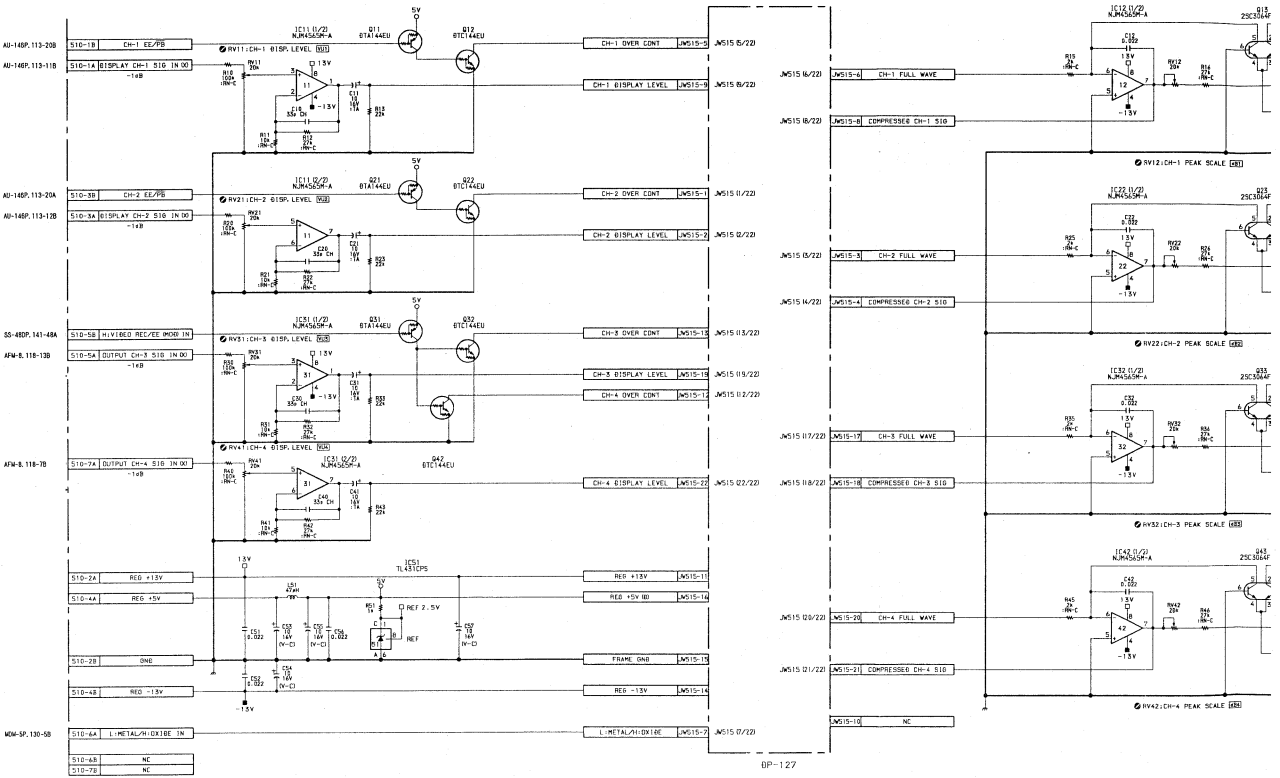

DP-126 BOARD

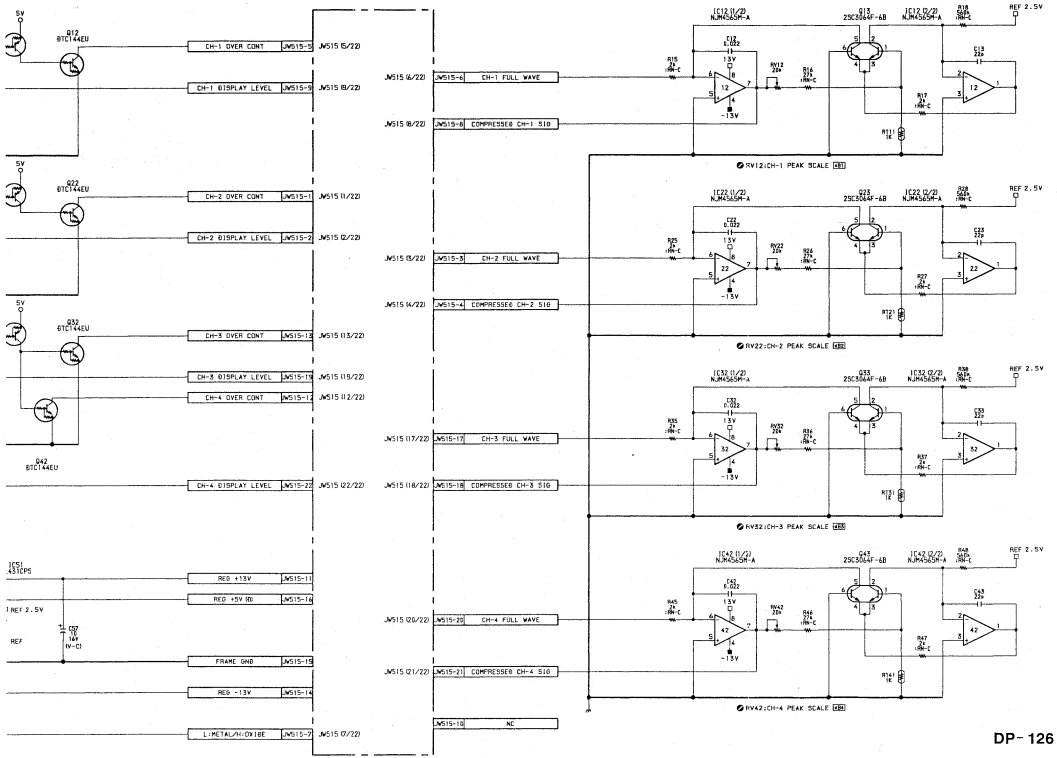

DP-126 BOARD

1-640-867-11
BVW-D75PS : #10001-

DP-127 BOARD
Level Meter

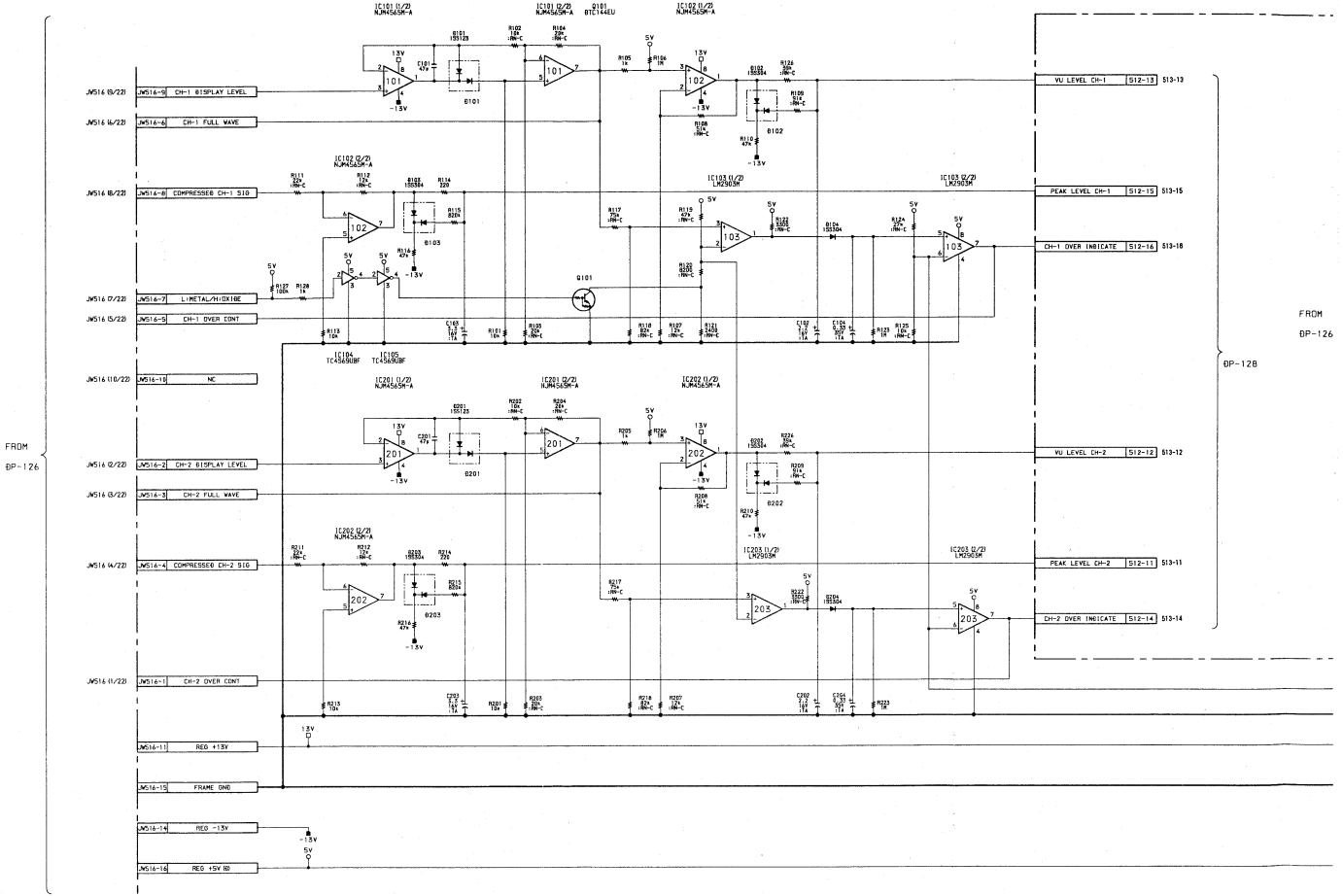

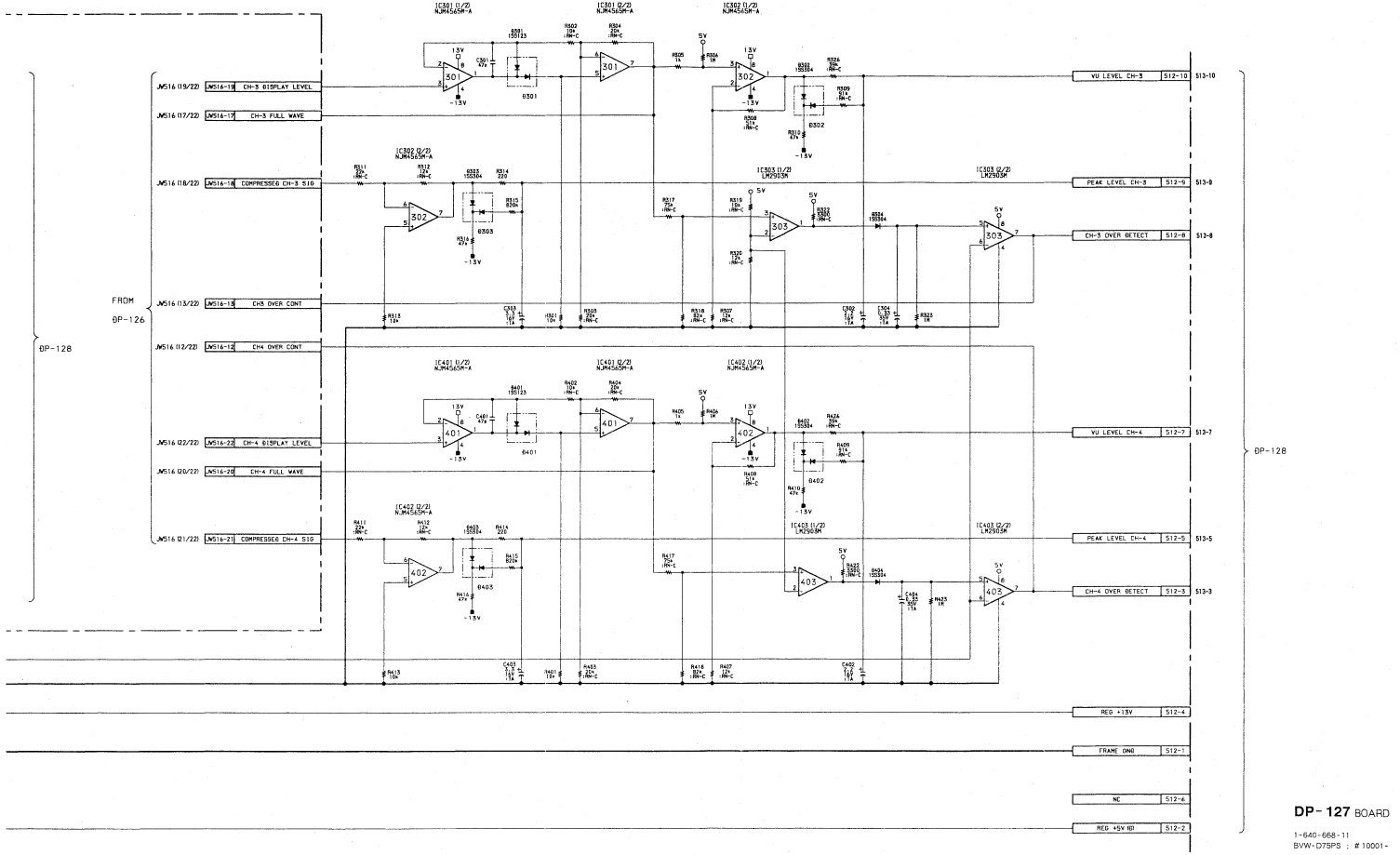

DP-127 BOARD

1-640-668-11
BVW-D75PS ; # 10001-

DP-128 BOARD
Level Meter
DP-129 BOARD
Level Meter

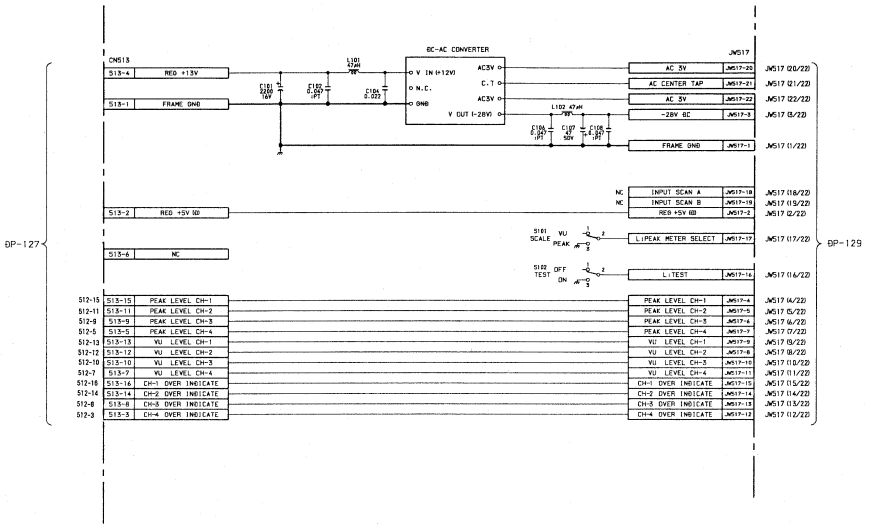

DP-128 BOARD

1-640-669-11
BVW-D75PS ; # 10001-

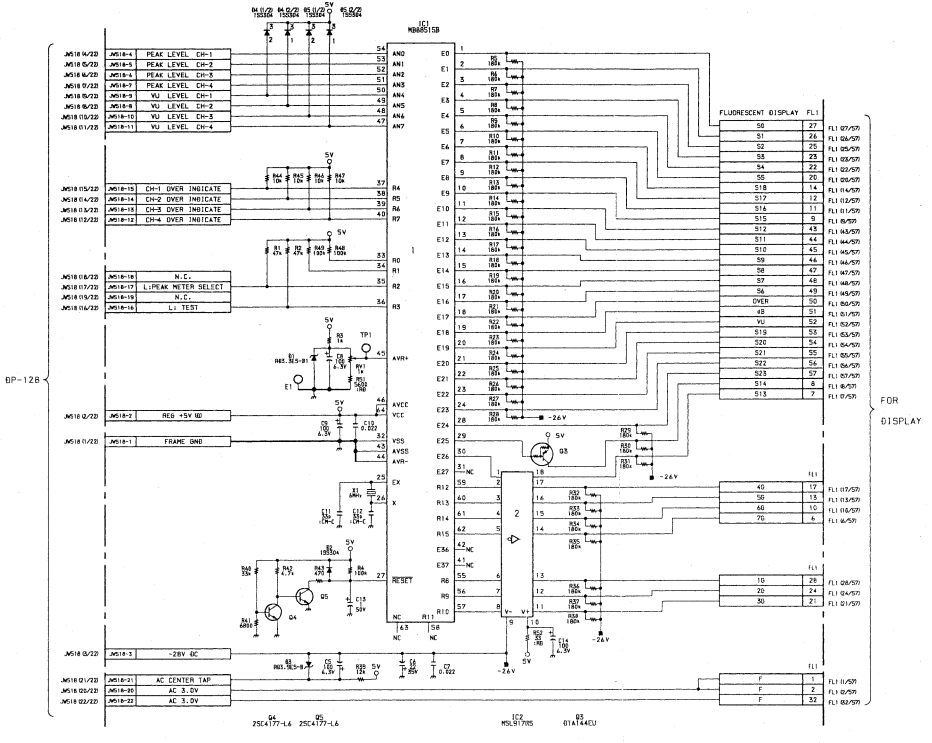

DP-129 BOARD

1-640-670-11
BVW-D75PS : #10001-

DP-156 BOARD
Video/RF Meter LED
VR-119 BOARD
Video/RF Meter LED

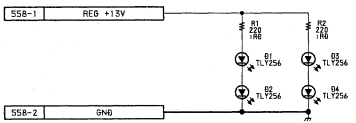

DP-156 BOARD

1-640-671-11
BVW-D75PS ; #10001-

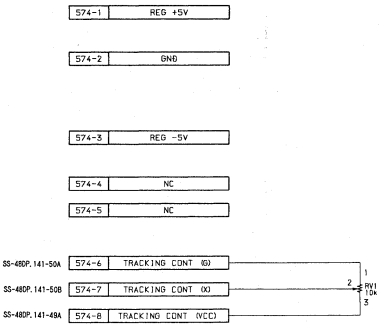

VR-119 BOARD

1-640-695-11
BVW-D75PS ; #10001-

SWC-10 BOARD

Select Switch, Display

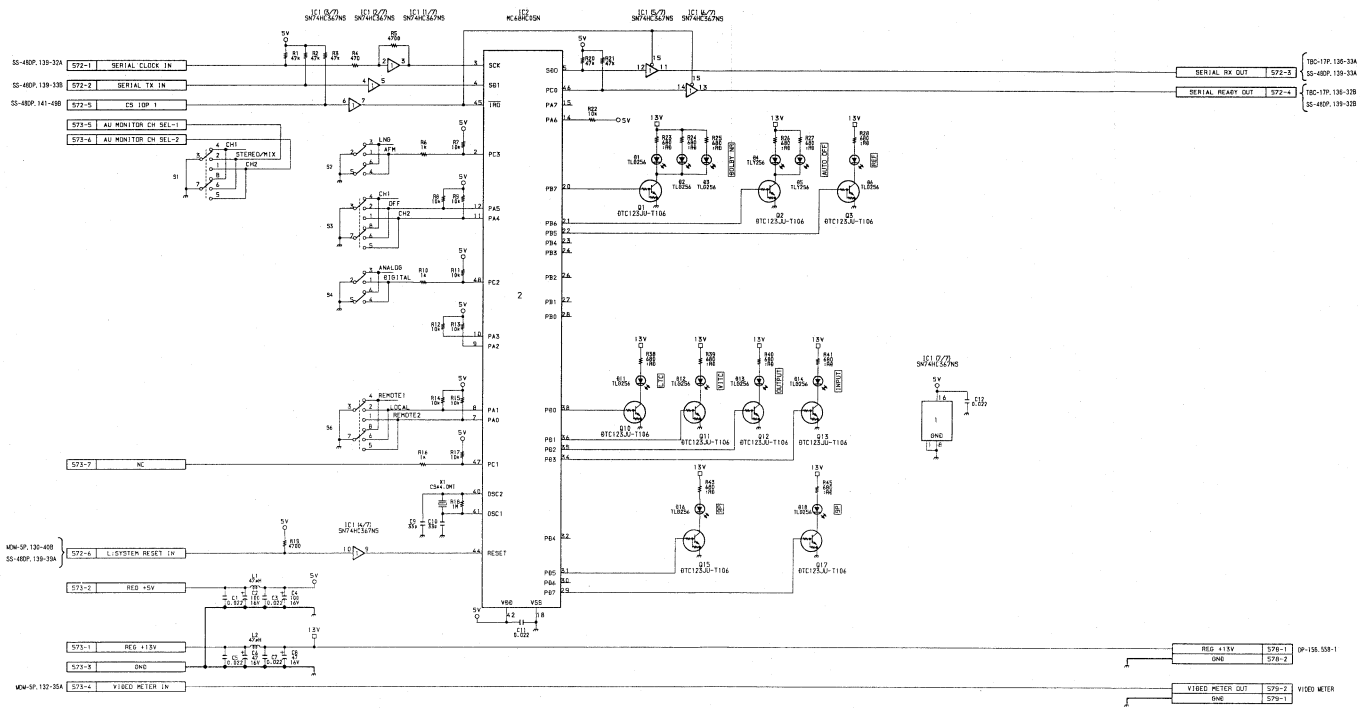

*A1
*A2
*S5

SWC-10 BOARD

1-640-689-11
BVW-D75PS ; # 10001-

SS-48DP BOARD (1/10)

SS-48DP BOARD (1/10)

System Control, Drum/Capstan/Reel Servo

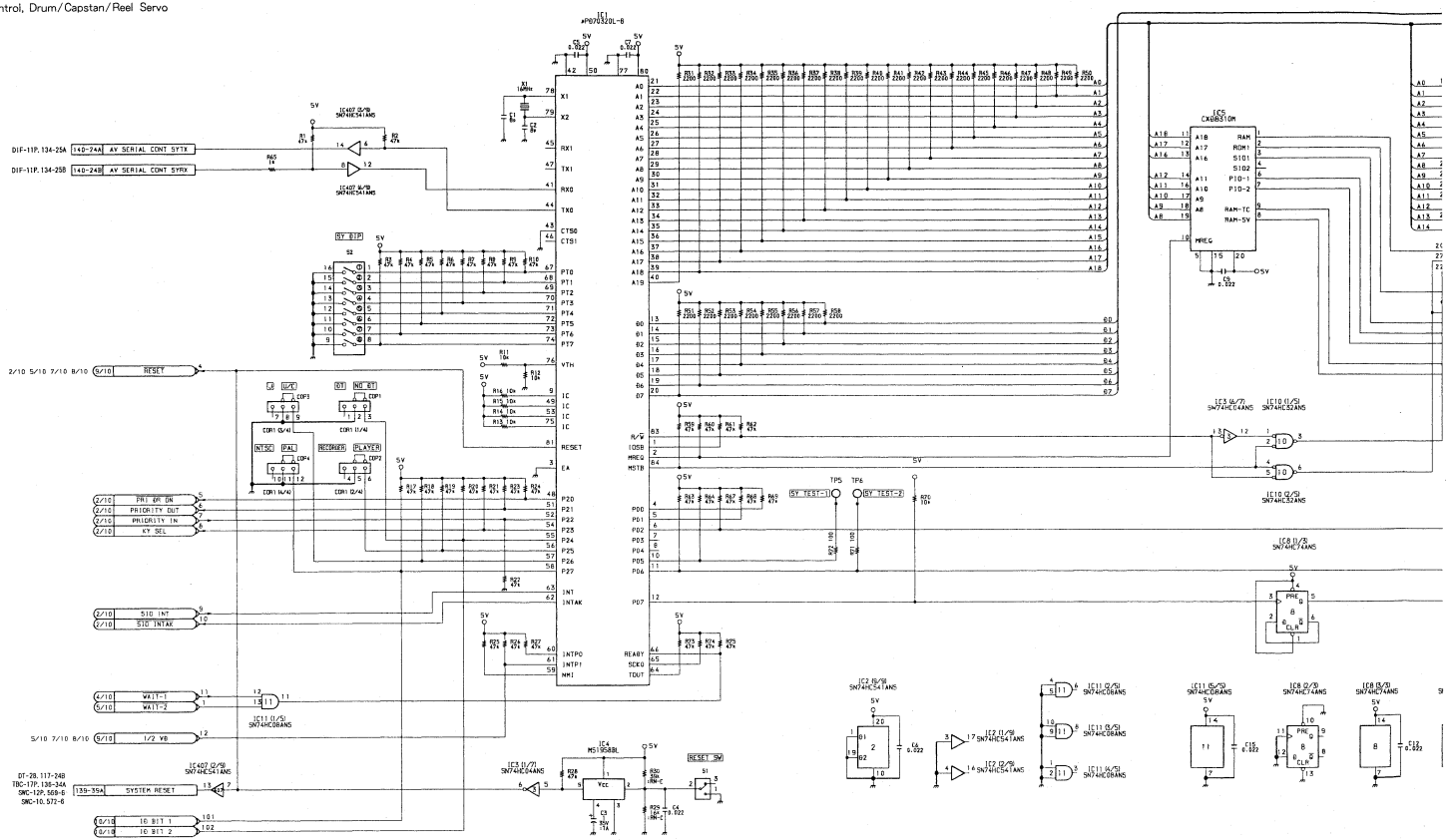

14-99

SS-48DP BOARD (1/10)

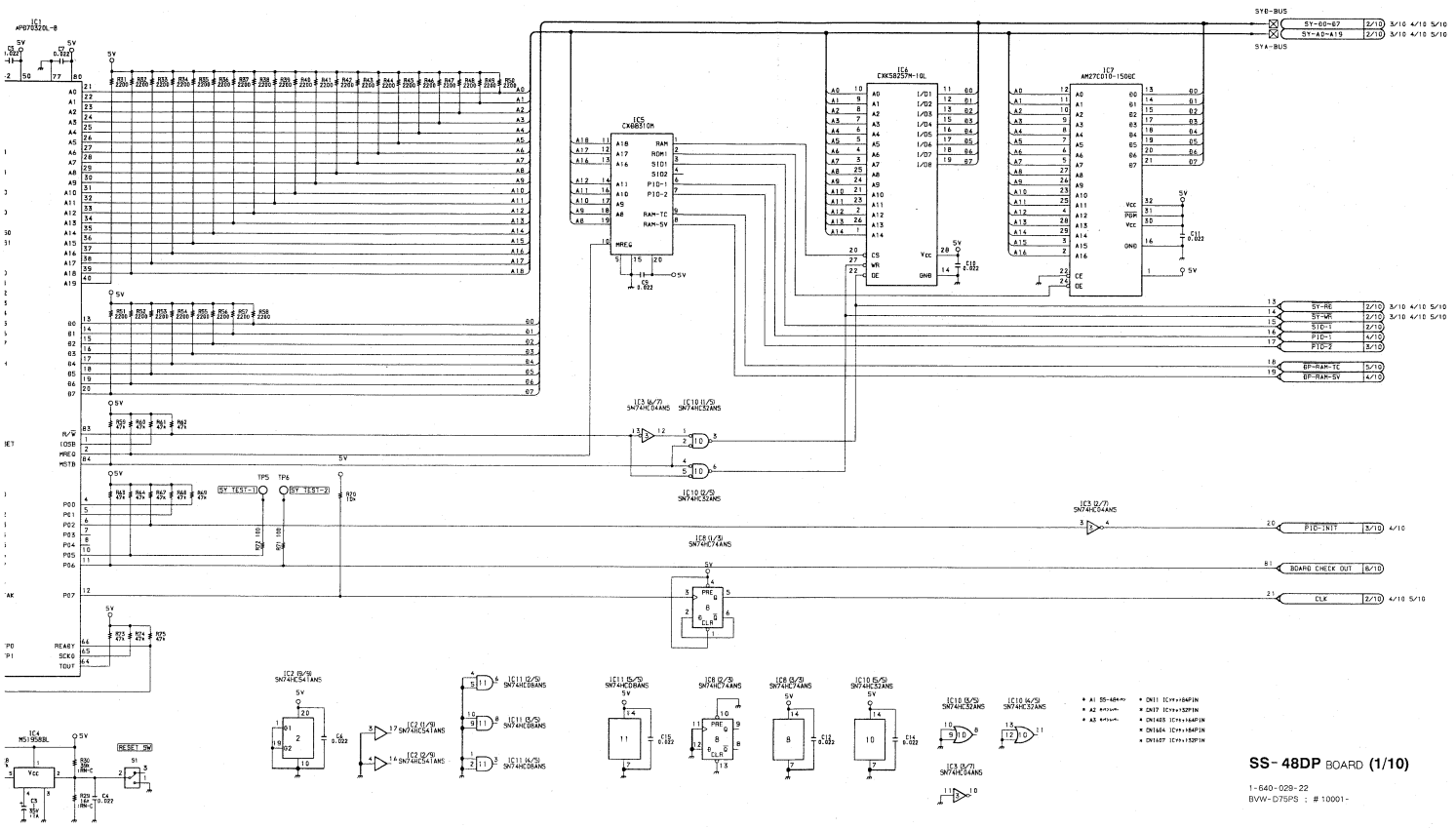

SS-48DP BOARD (1/10)

1-640-029-22
BVW-D75PS : #10001-

SS-48DP BOARD (2/10)

SS-48DP BOARD (2/10)

System Control, Drum/Capstan/Reel Servo

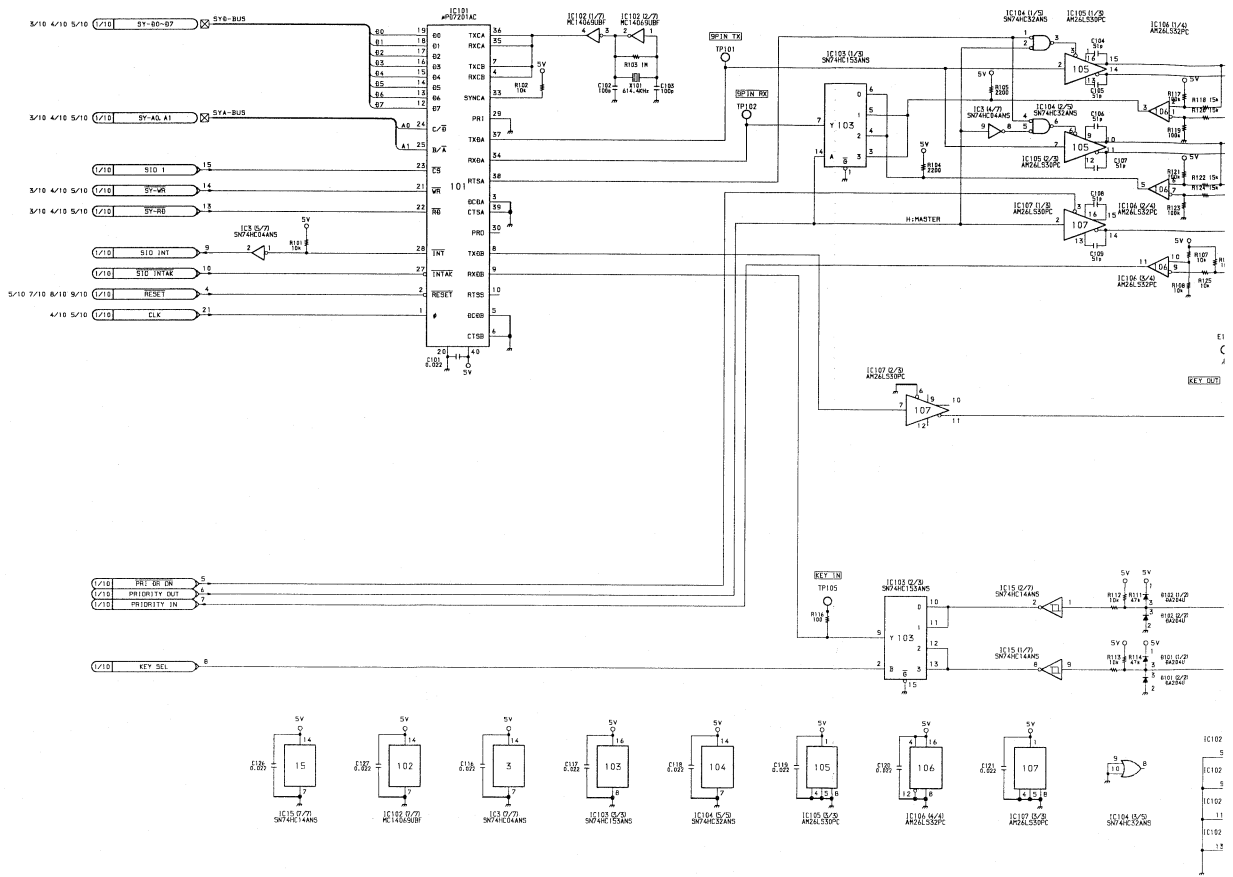

14-101

14-101

A | B | C | D | E | F | G | H

SS-48DP BOARD (2/10)

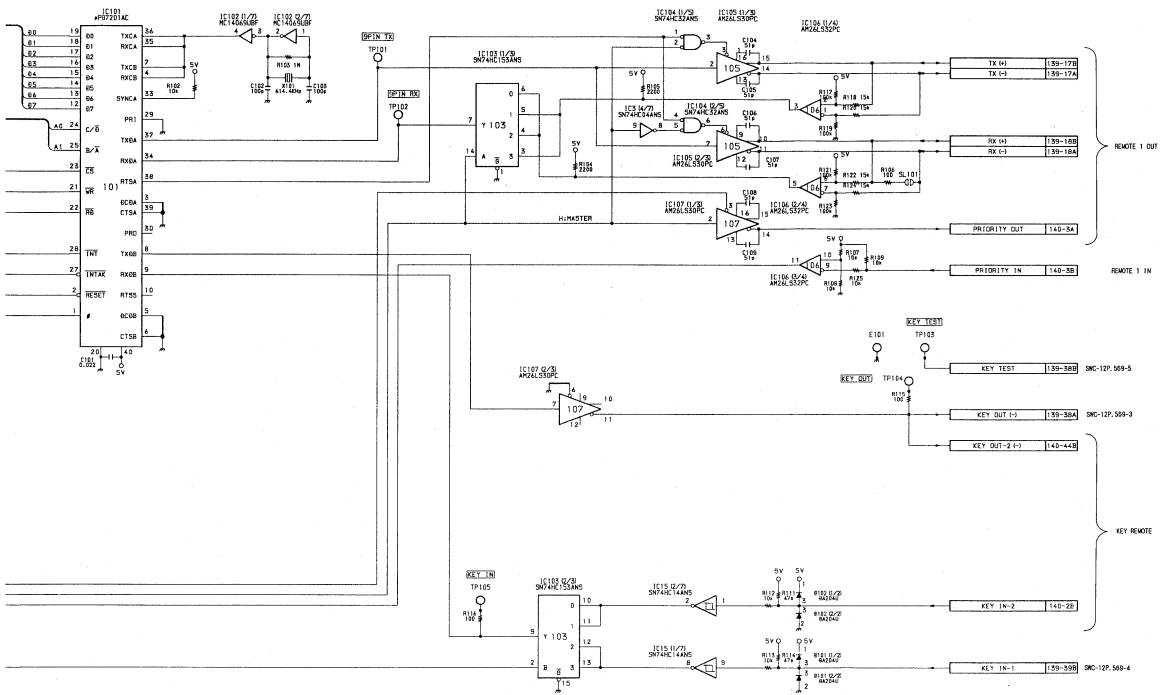

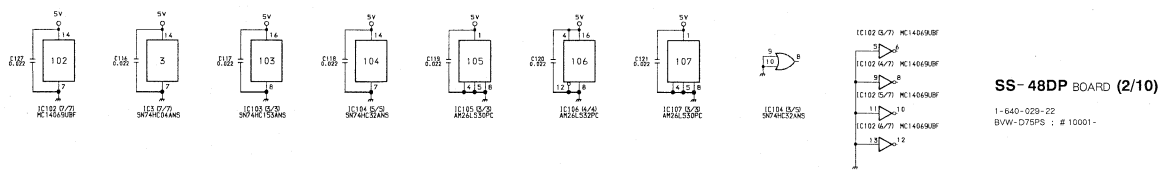

SS-48DP BOARD (2/10)

1-640-029-22
BVW-D75PS : # 10001-

14-101

SS-48DP BOARD (3/10)

SS-48DP BOARD (3/10)

System Control, Drum/Capstan/Reel Servo

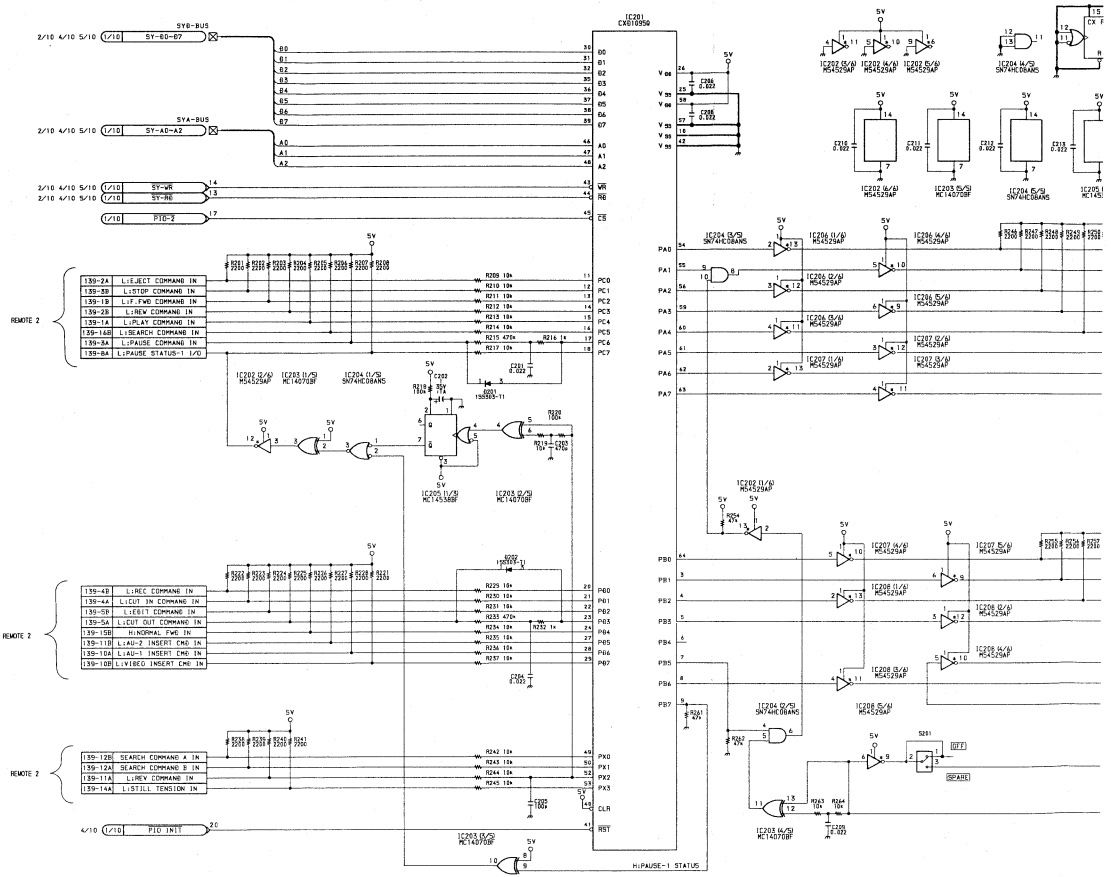

14-103

SS-48DP BOARD (3/10)

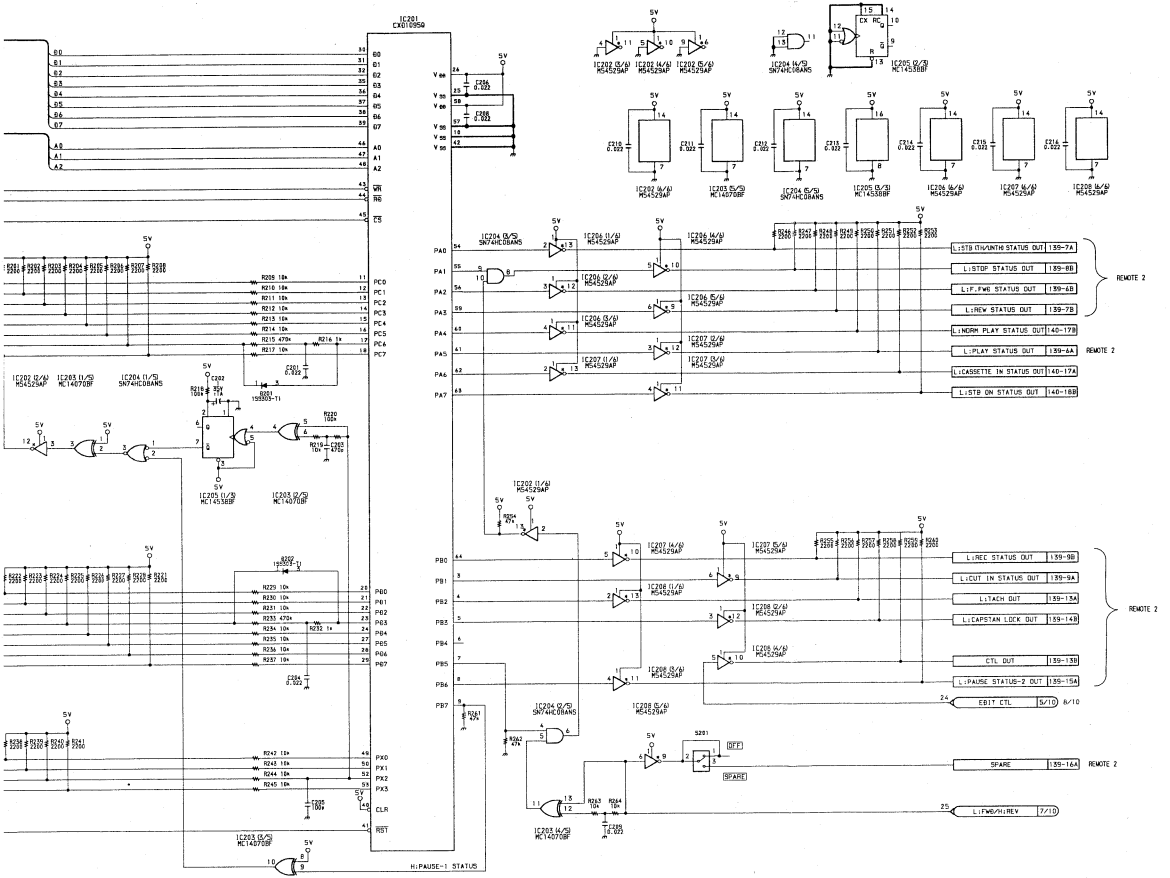

14-103

SS-48DP BOARD **(3/10)**

1-640-029-22
BVW-D75PS ; # 10001-

SS-48DP BOARD (4/10)

SS-48DP BOARD (4/10)

System Control, Drum/Capstan/Reel Servo

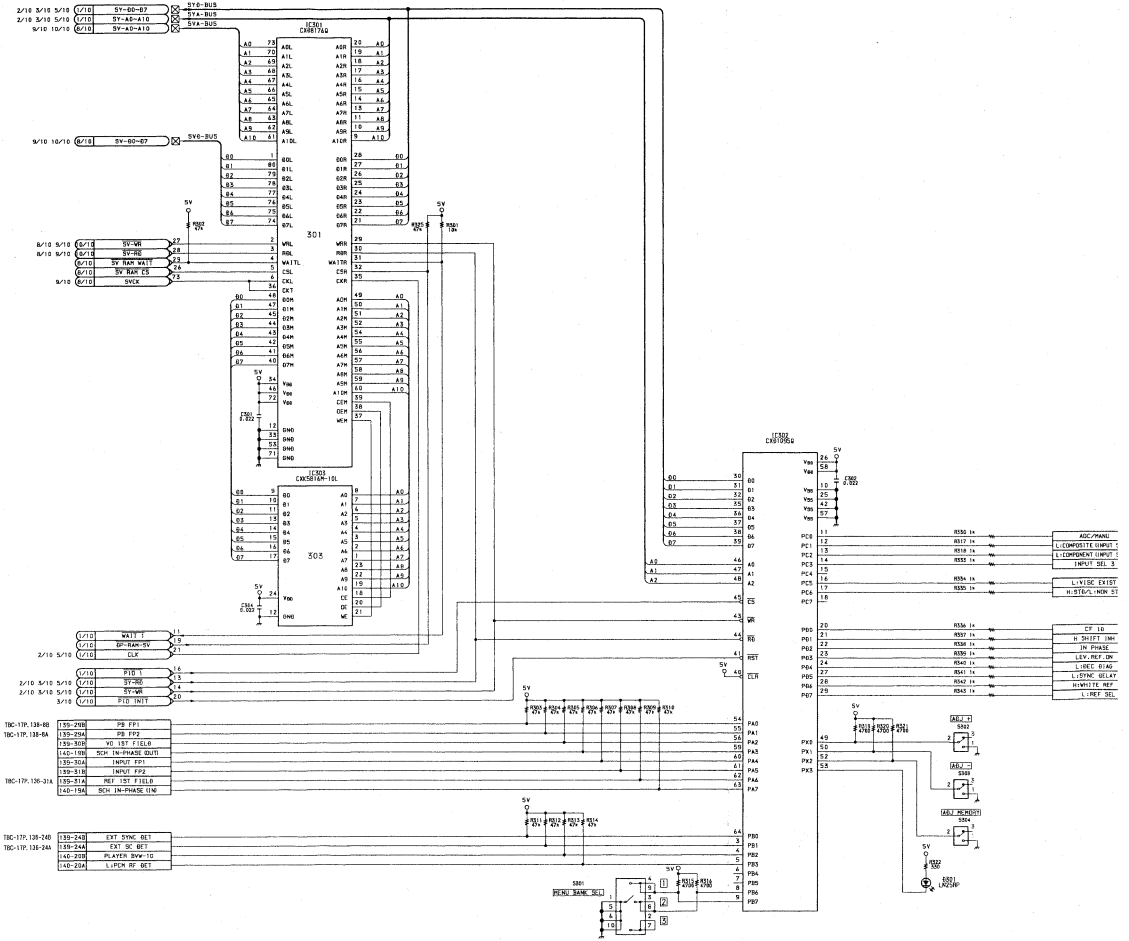

14-105

SS-48DP BOARD (4/10)

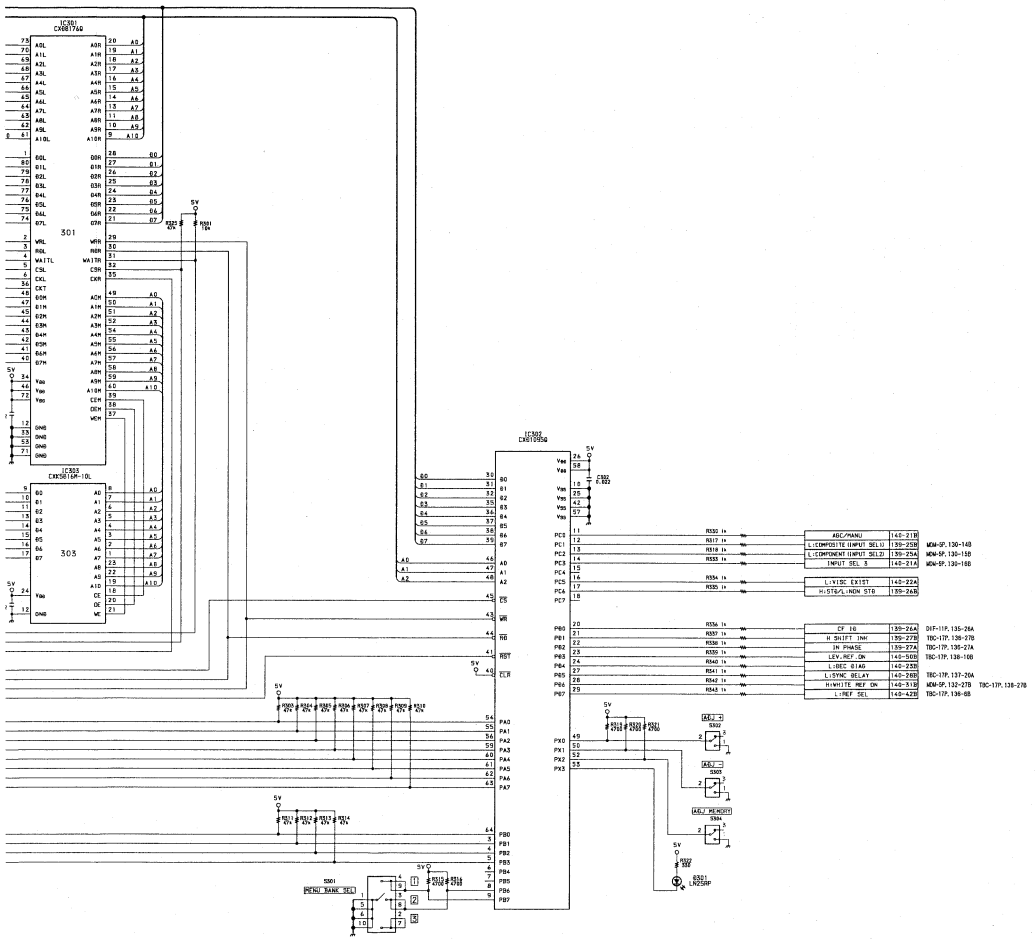

SS-48DP BOARD (4/10)

1-640-029-22
BVW-D75PS ; #10001-

14-105

SS-48DP BOARD (5/10)

SS-48DP BOARD (5/10)

System Control, Drum/Capstan/Reel Servo

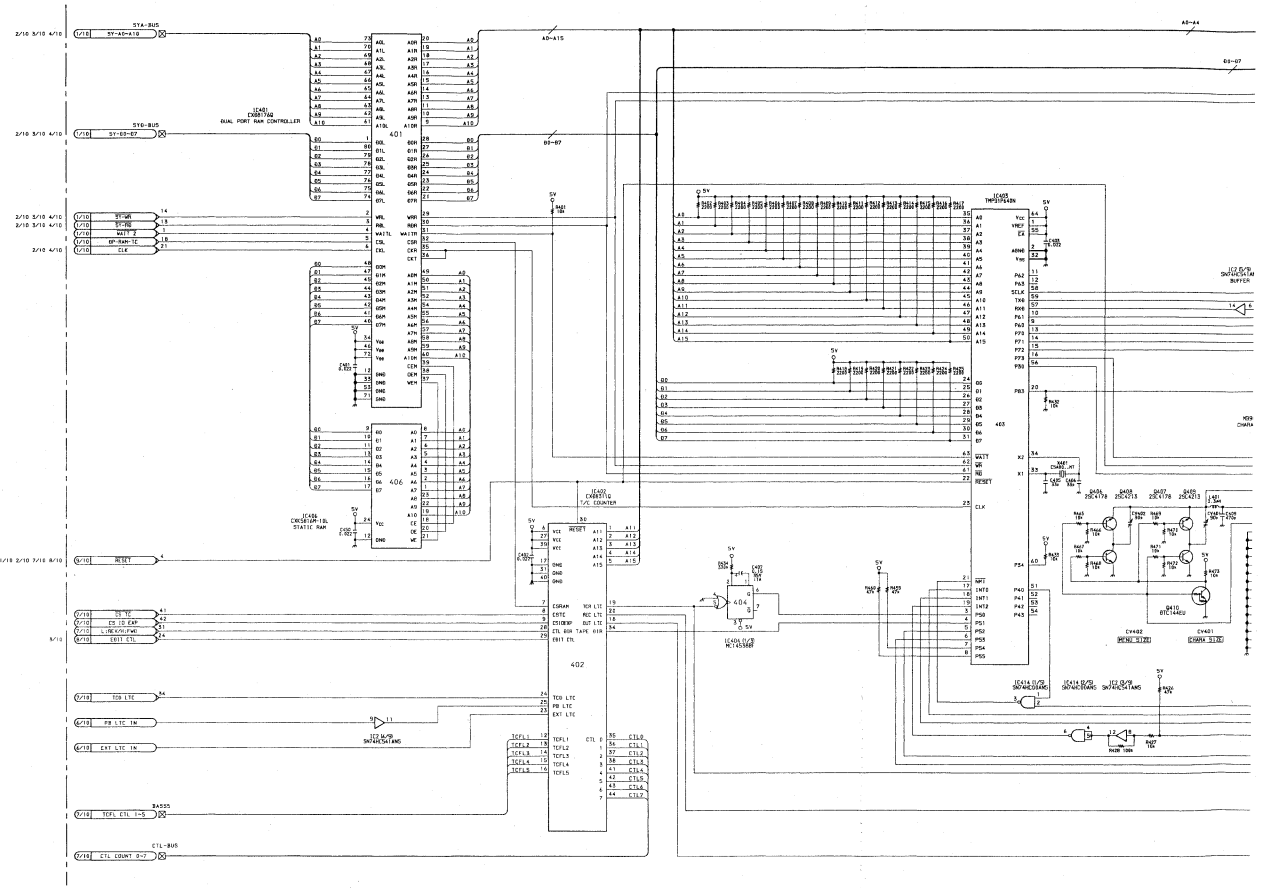

14-107

SS-48DP BOARD (5/10)

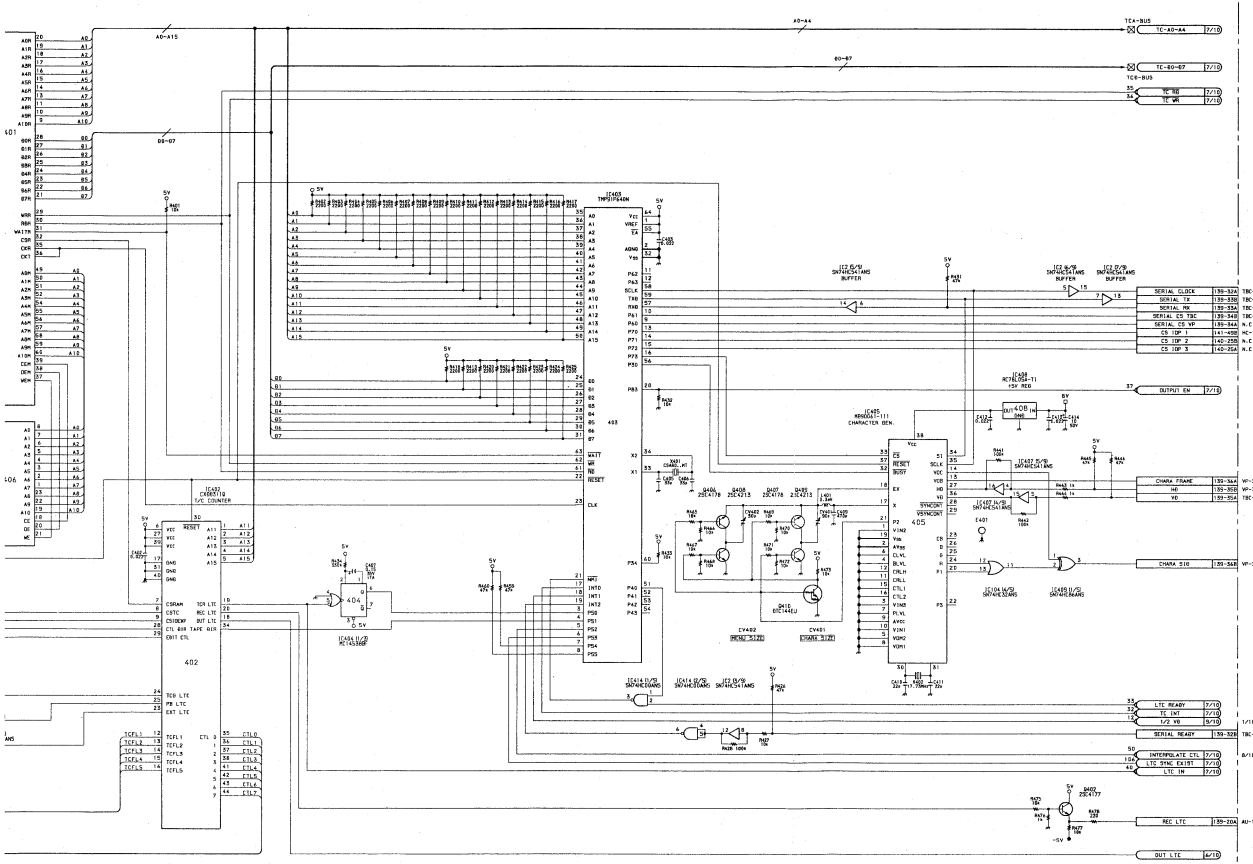

SS-48DP BOARD (5/10)

1-640-029-22
BVW-D75PS ; # 10001-

14-107

SS-48DP (6/10), EQ-42 BOARD

SS-48DP BOARD (6/10)
System Control, Drum/Capstan/Reel Servo
EQ-42 BOARD
Time Code Mute

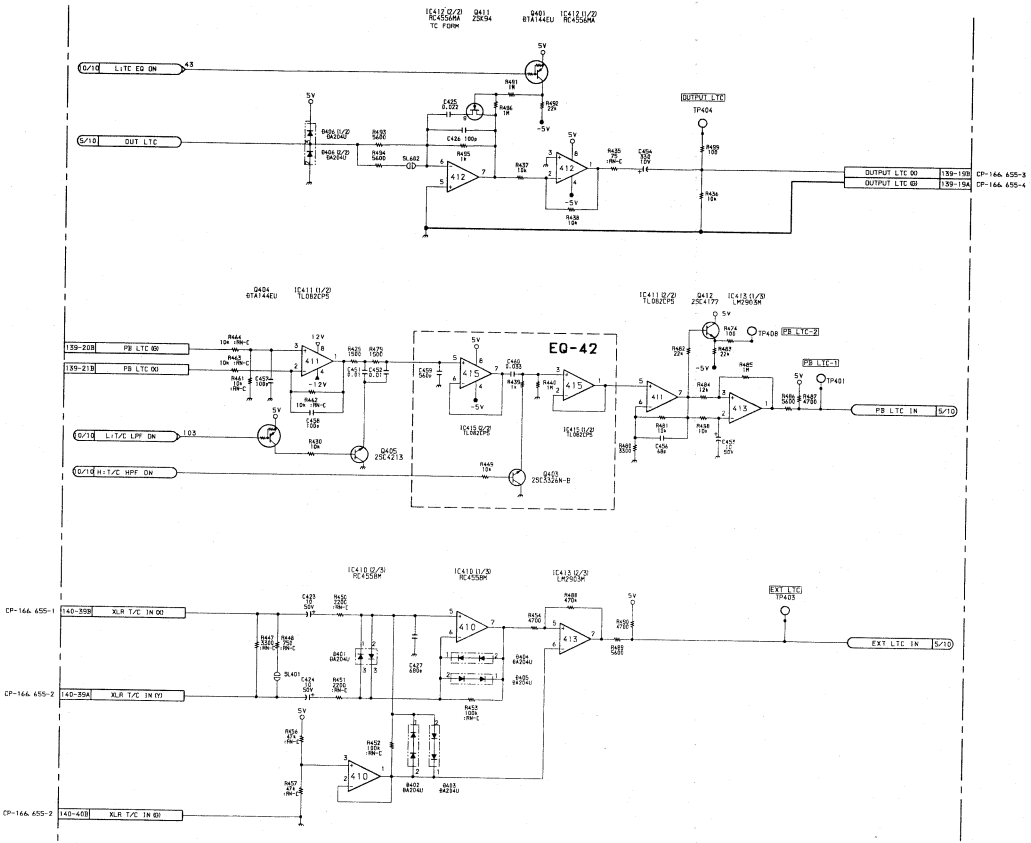

14-109

A | B | C | D | E | F | G | H

SS-48DP (6/10), EQ-42 BOARD

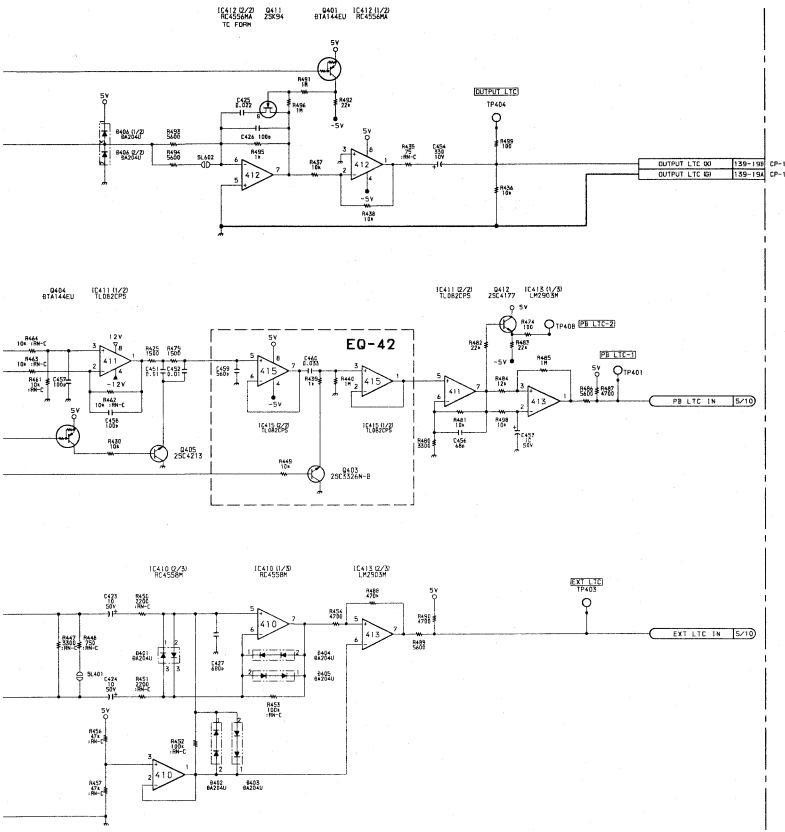

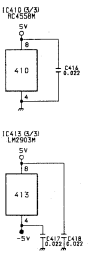

SS-48DP BOARD **(6/10)**

1-640-029-22
BVW-D75PS ; # 10001-

14-109

SS-48DP BOARD (7/10)

SS-48DP BOARD (7/10)

System Control, Drum/Capstan/Reel Servo

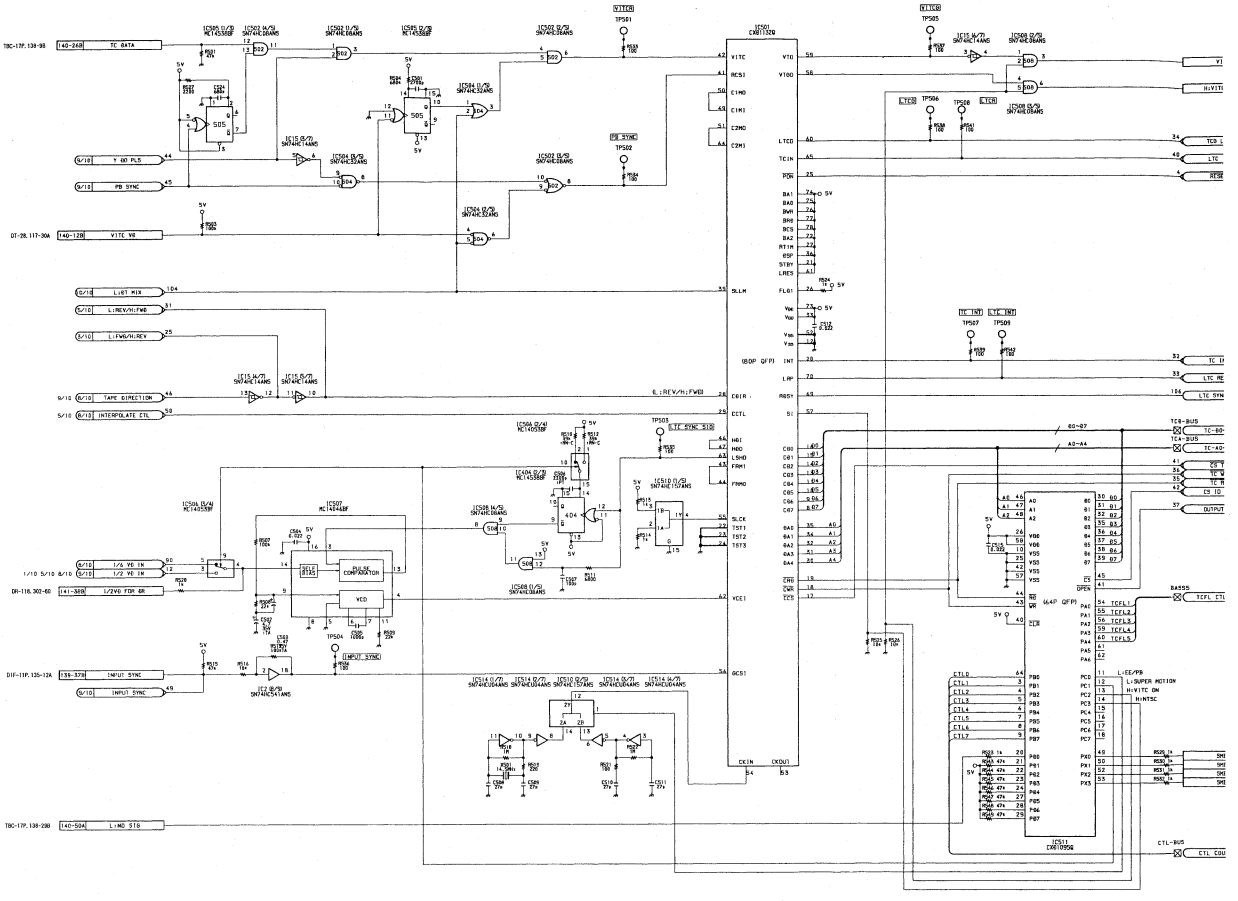

14-111

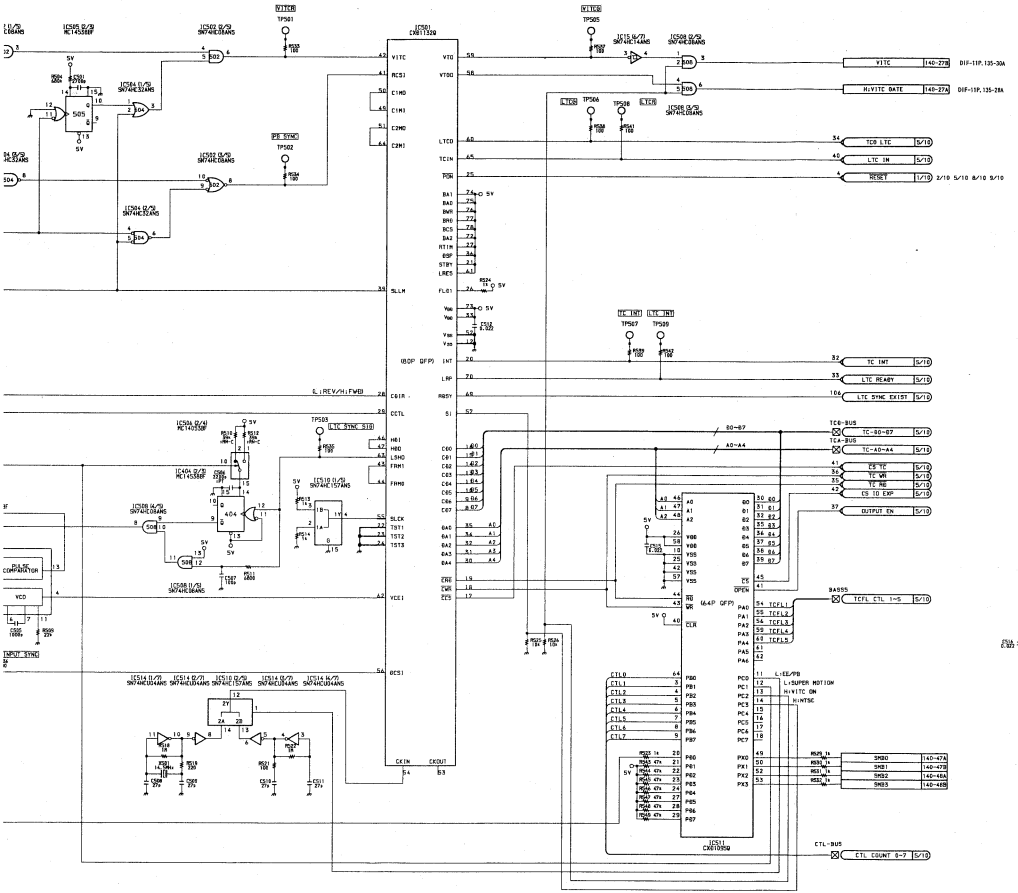
VITC
TPS01
PE SYNC
TPS02
TPS03
LTC SYNC S10
TPS04
TPS05
TPS06
TPS07
TPS08
TPS09
IC501 CXK1332Q
VITC
VTOD
C1MD
C1MI
C2MD
C2MI
LTCD
TCIN
PDN
BAI
BAD
BAR
BRI
BCS
BA2
RTIN
BSP
STBY
LRES
SLLM
FLG1
VDD
VSS
IBOP QFP5
INT
LRP
RBSY
CSIR
CSTL
HRI
HRO
LSHD
TRM1
TRMD
SLCK
TST1
TST2
TST3
RWE
CWR
CYS
VCE1
DCS1
CKIN
CKOUT
64
63
IC502 (1/6) SN74HC04ANS
IC503 (2/6) SN74HC04ANS
IC504 (3/6) SN74HC32ANS
IC505 (4/6) SN74HC32ANS
IC506 (5/6) SN74HC32ANS
IC507 (6/6) SN74HC04ANS
IC508 (6/6) SN74HC08ANS
IC509 (5/6) SN74HC08ANS
IC510 (1/6) SN74HC157ANS
IC511 (2/6) MC14053BF
IC512 (3/6) SN74HC157ANS
IC513 (4/6) MC14053BF
IC514 (5/6) SN74HC157ANS
IC515 (6/7) SN74HC14ANS
IC516 (7/7) SN74HC14ANS
IC517 (7/7) SN74HC14ANS
IC518 (6/6) SN74HC157ANS
IC519 (7/7) SN74HC14ANS
IC520 (7/7) SN74HC14ANS
IC521 (7/7) SN74HC14ANS
IC522 (7/7) SN74HC14ANS
IC523 (7/7) SN74HC14ANS
IC524 (7/7) SN74HC14ANS
IC525 (7/7) SN74HC14ANS
IC526 (7/7) SN74HC14ANS
IC527 (7/7) SN74HC14ANS
IC528 (7/7) SN74HC14ANS
IC529 (7/7) SN74HC14ANS
IC530 (7/7) SN74HC14ANS
IC531 (7/7) SN74HC14ANS

SS-48DP BOARD (8/10)

SS-48DP BOARD (8/10)

System Control, Drum/Capstan/Reel Servo

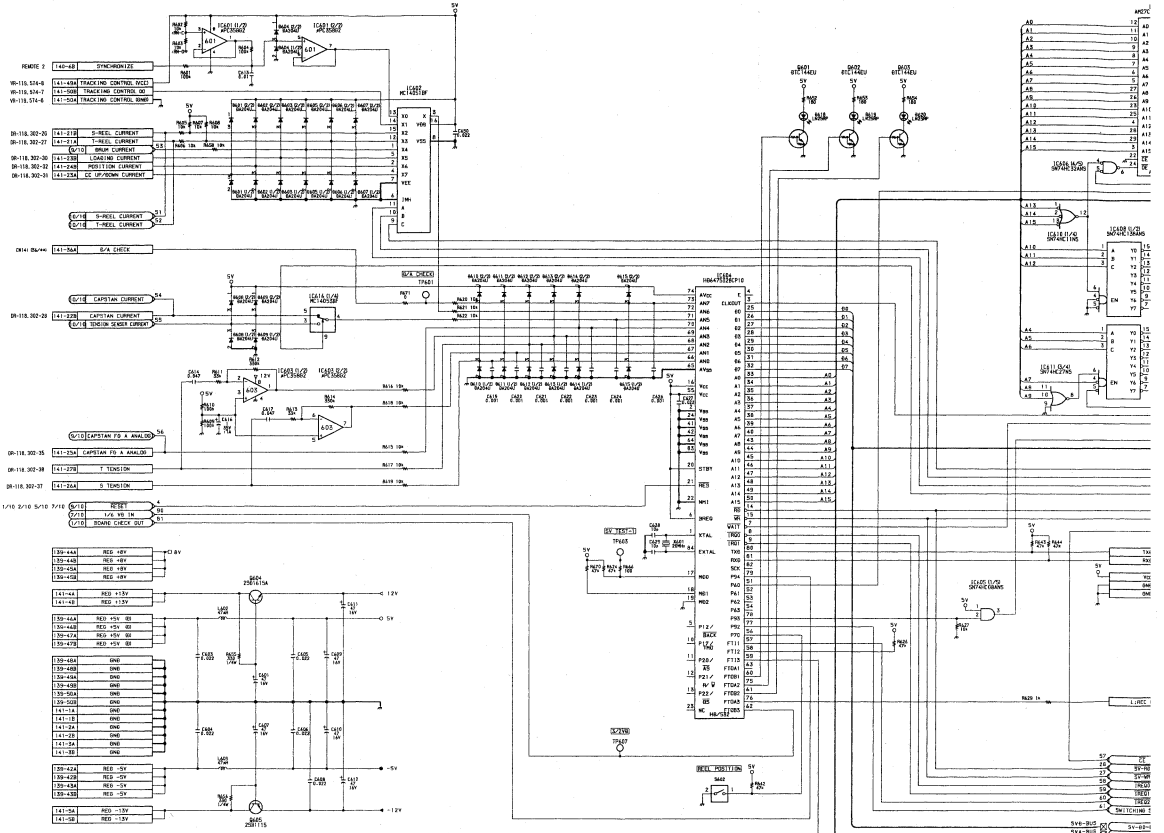

14-113

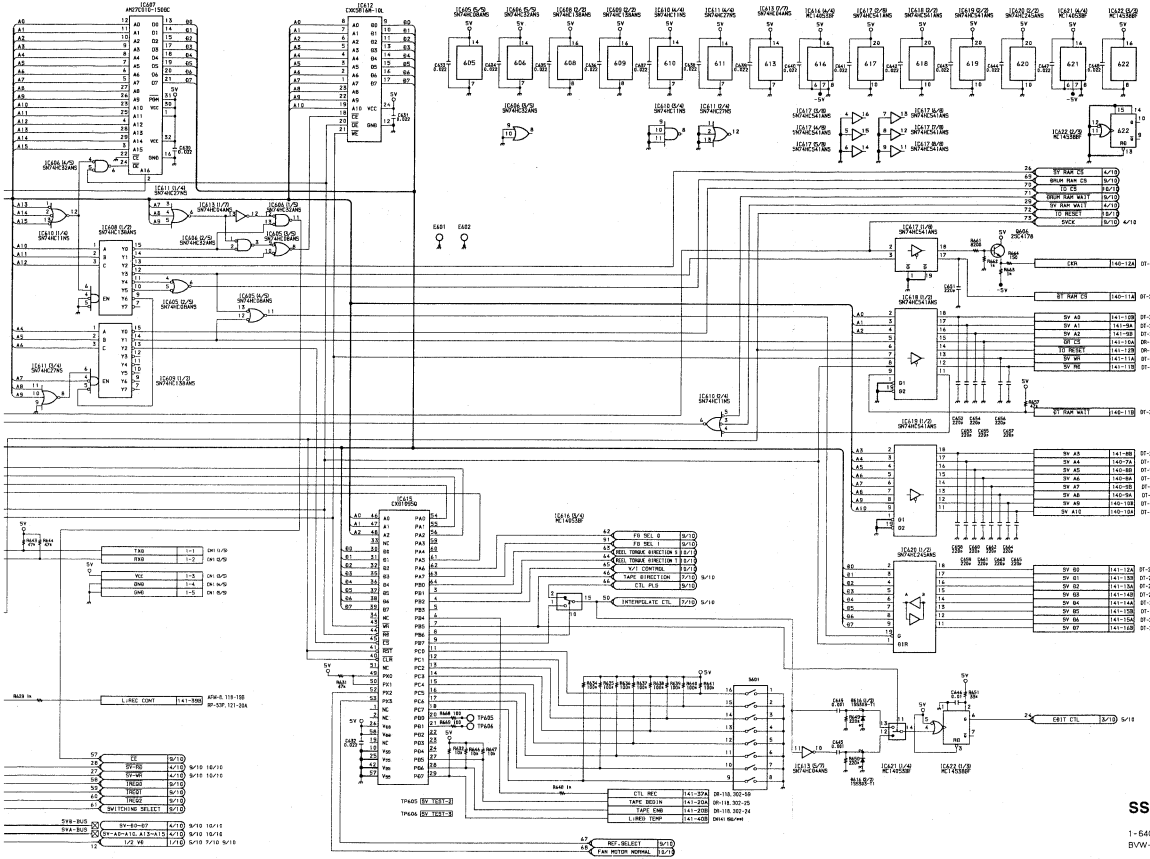

SS-48DP BOARD (8/10)

1-640-029-22
BVW-D75PS ; # 10001-

14-113

SS-48DP BOARD (9/10)

System Control, Drum/Capstan/Reel Servo

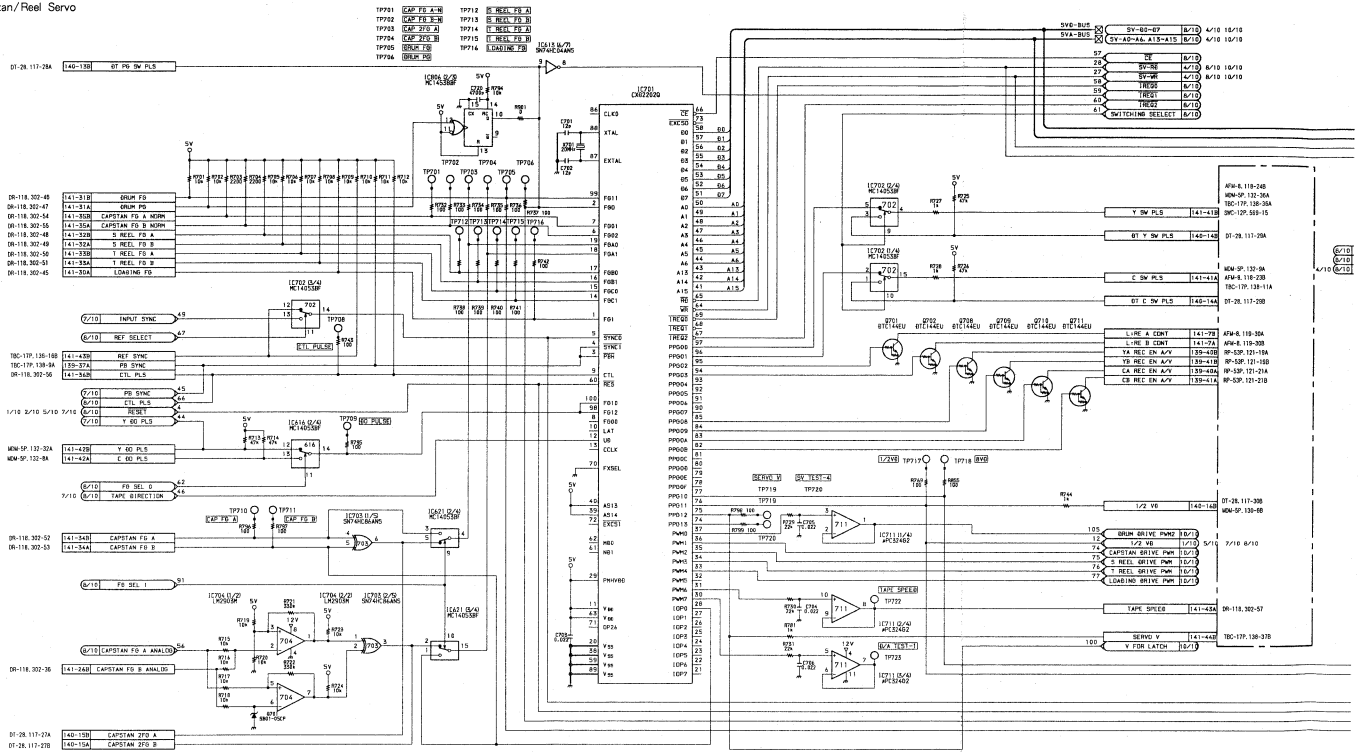

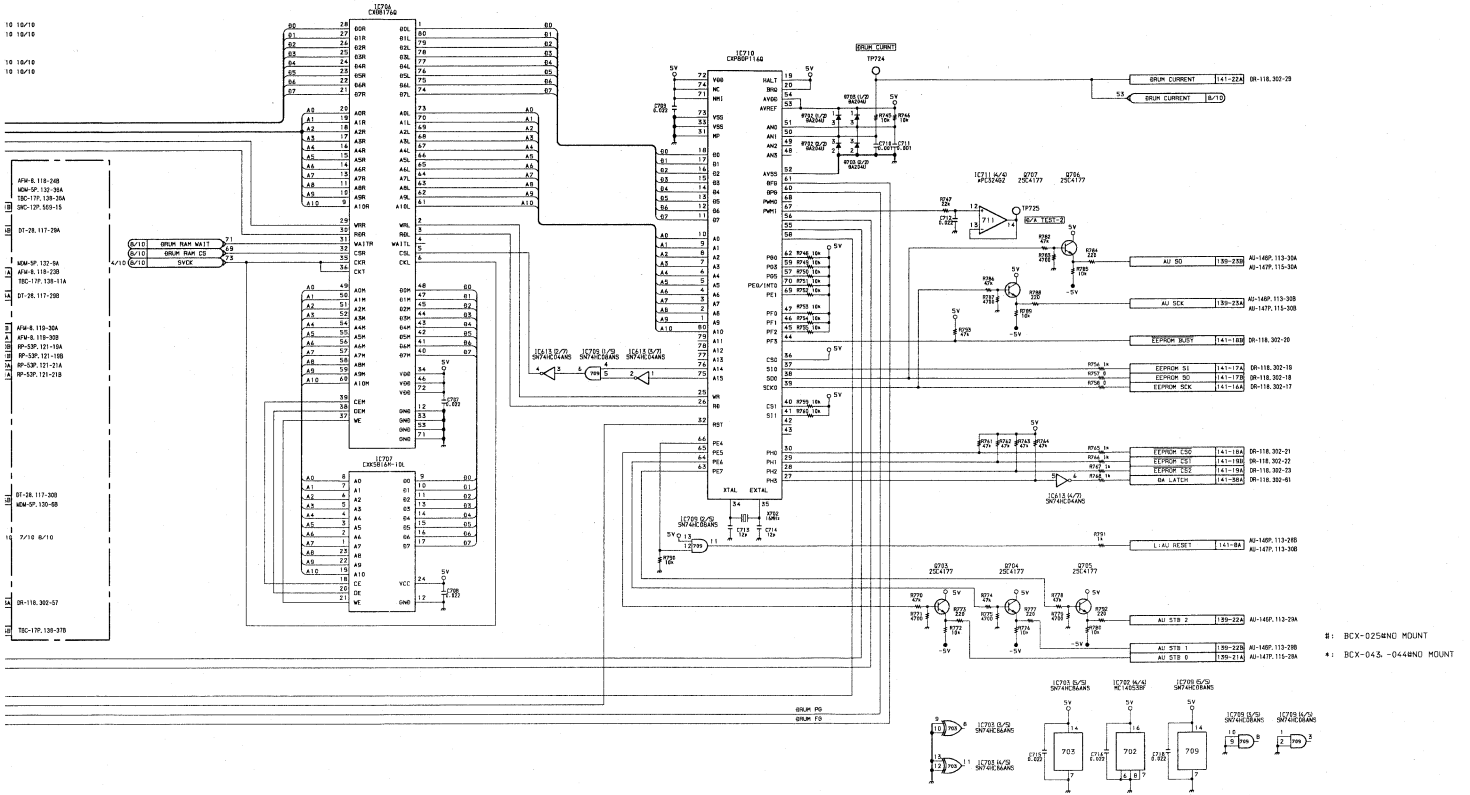

#: BCX-025#NO MOUNT
*: BCX-043, -044#NO MOUNT

SS-48DP BOARD (9/10)

1-640-029-22
BVW-D75PS ; # 10001-

SS-48DP BOARD (10/10)

System Control, Drum/Capstan/Reel Servo

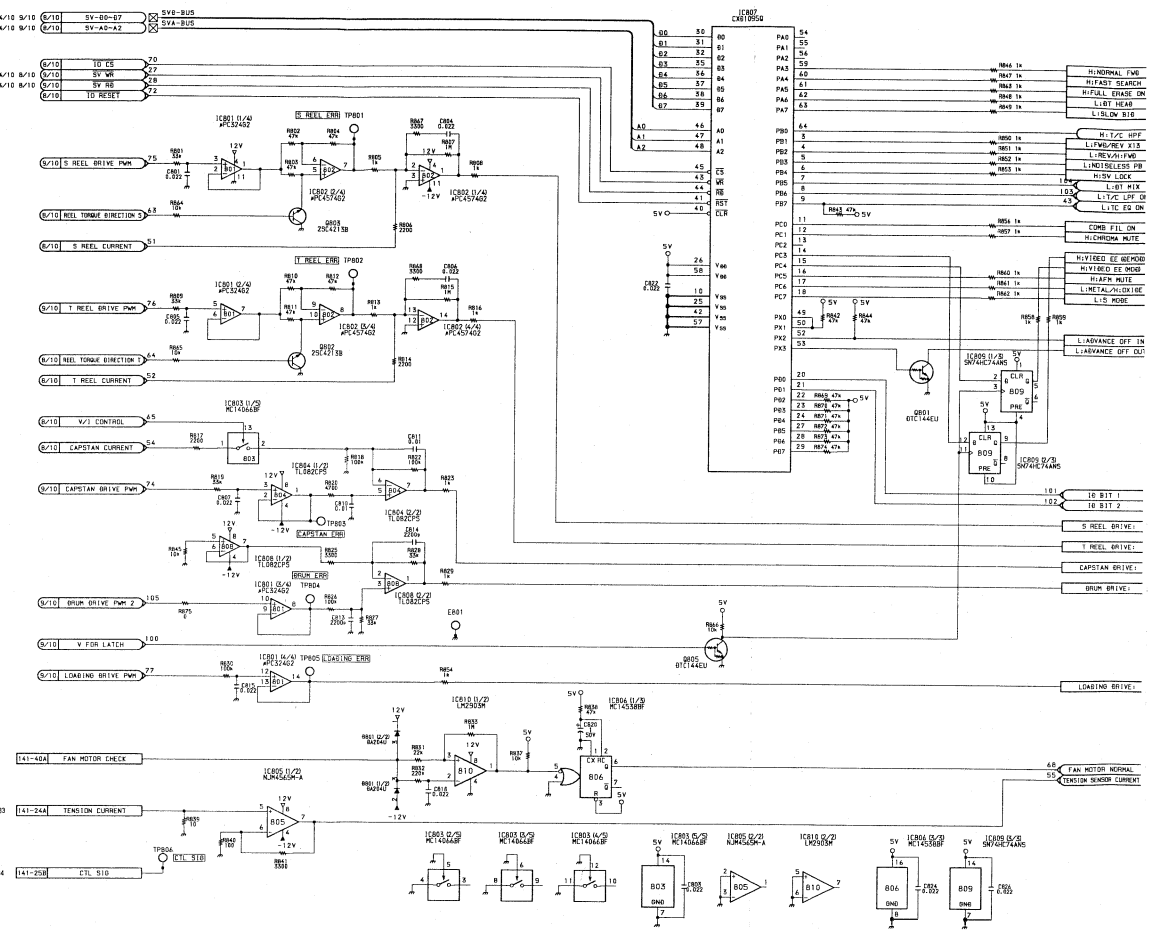

14-117

SS-48DP BOARD (10/10)

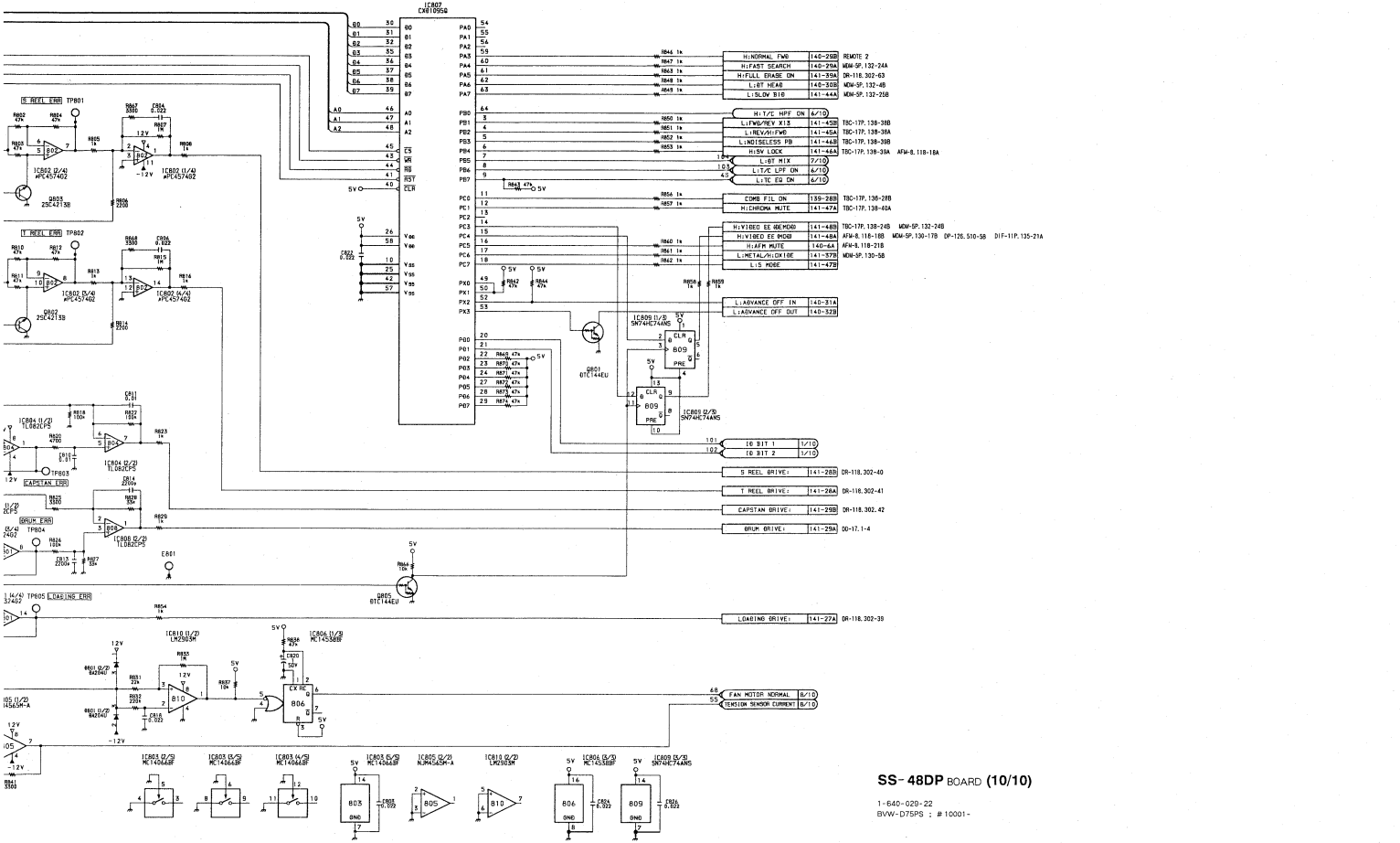

SS-48DP BOARD (10/10)

1-640-029-22
BVW-D75PS ; # 10001-

DT-28 BOARD (1/4)
Dynamic Tracking
SR-52 BOARD

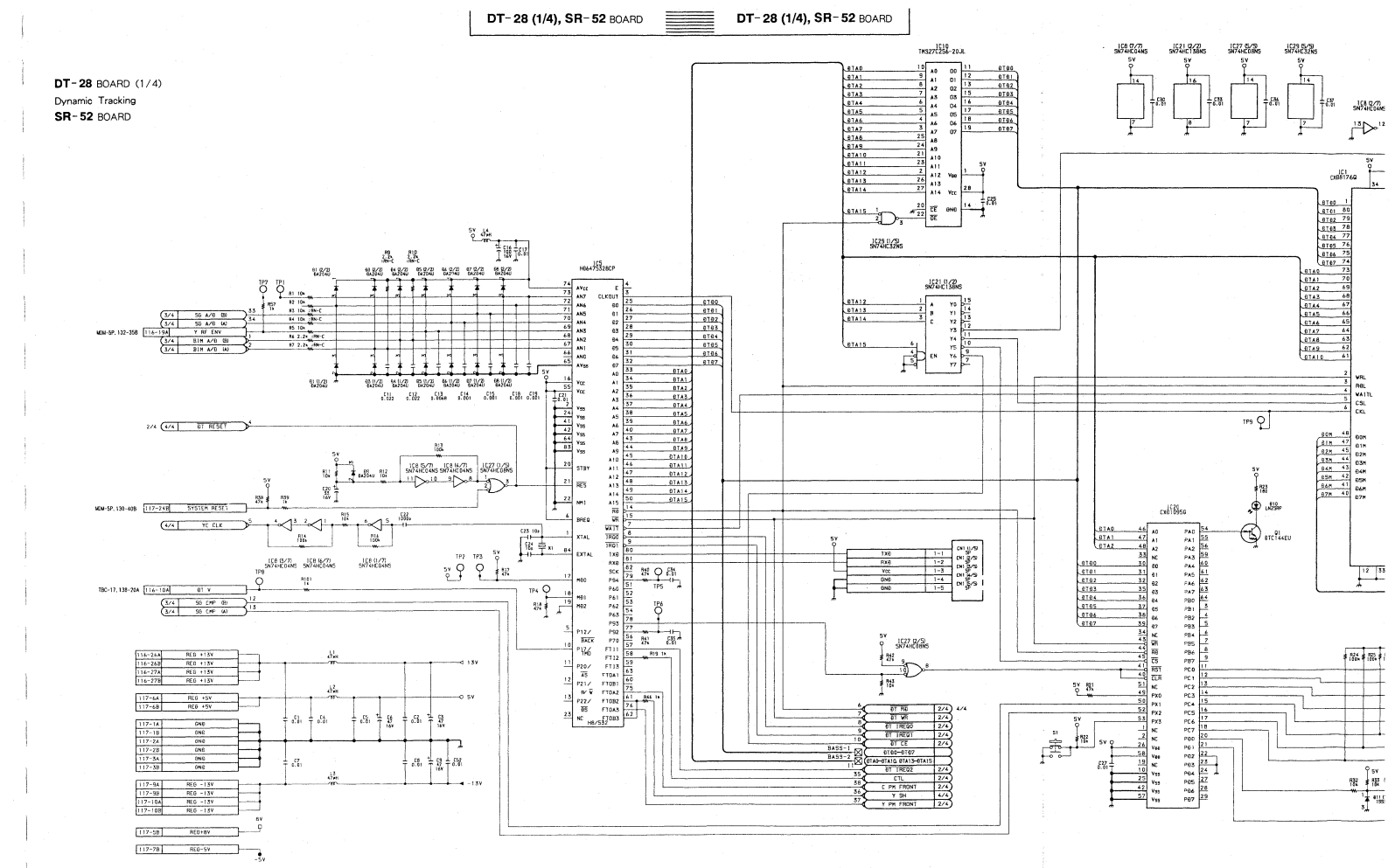

DT-28 (1/4), SR-52 BOARD

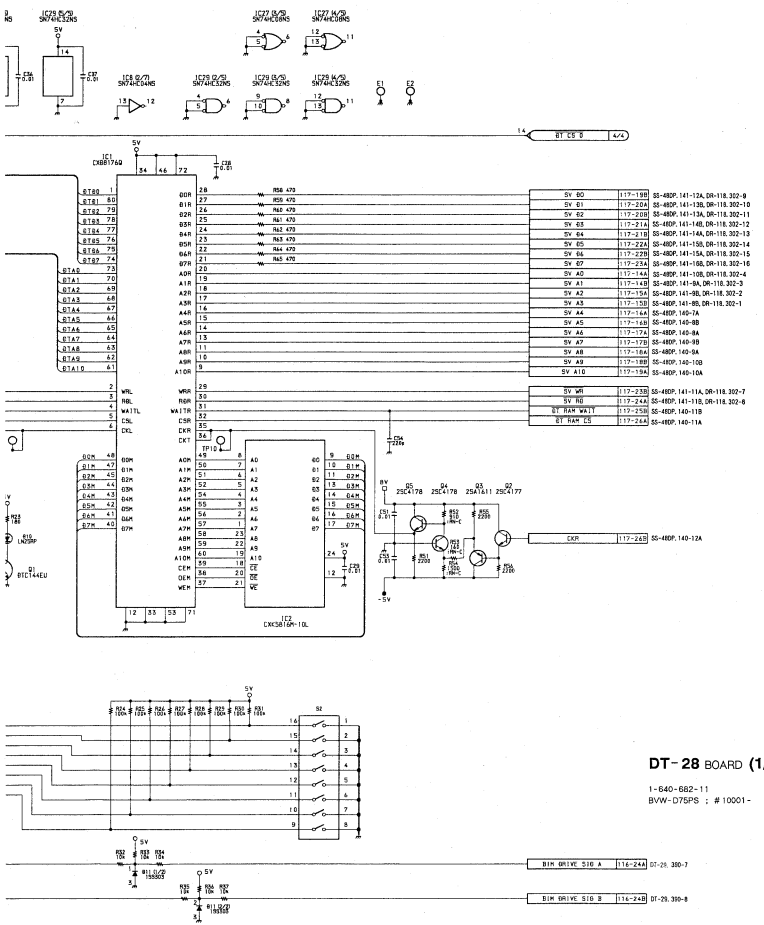

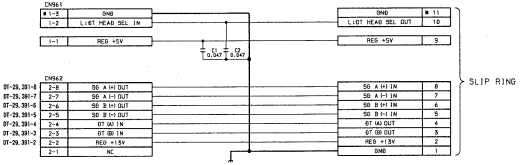

DT-28 BOARD (1/4)

1-640-662-11
BVW-D75PS ; #10001-

SR-52 BOARD

1-640-695-12
BVW-D75PS ; #10001-

14-119

DT-28 BOARD (2/4) (3/4)

Dynamic Tracking

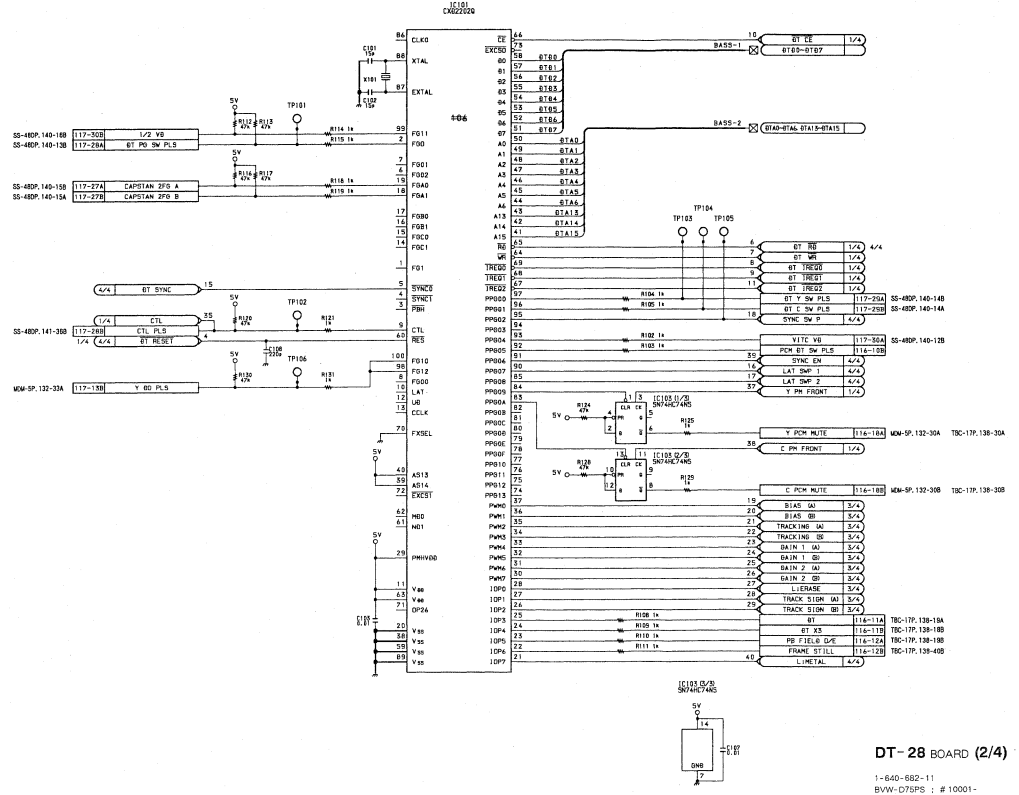

DT-28 BOARD **(2/4)**

1-640-682-11

BVW-D75PS ; # 10001-

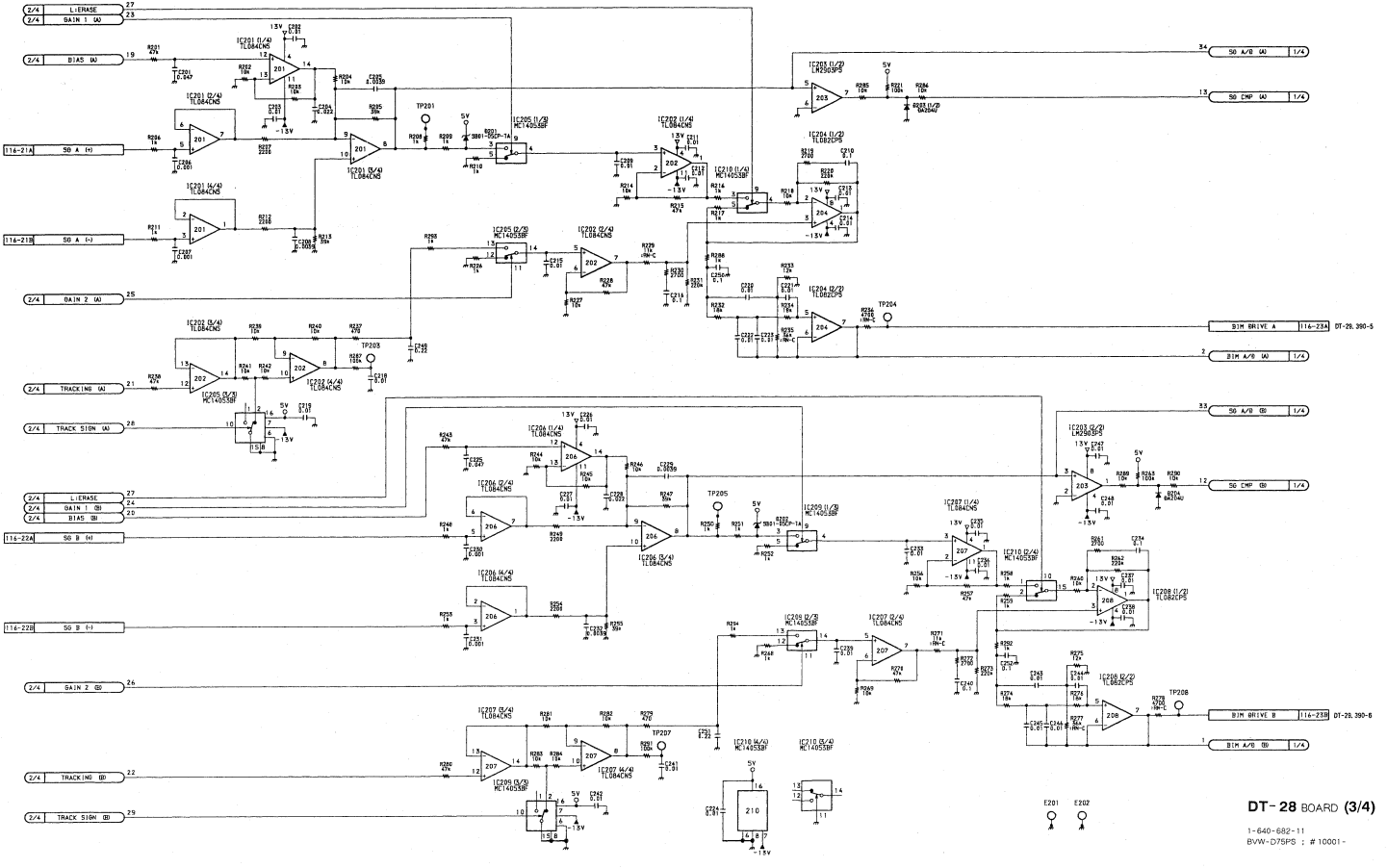
2/4 L-ERASE
2/4 GAIN 1 (A)
2/4 BIAS (A)
116-21A SG A (+)
116-21B SG A (-)
2/4 GAIN 2 (A)
2/4 TRACKING (A)
2/4 TRACK SIGN (A)
2/4 L-ERASE
2/4 GAIN 1 (B)
2/4 BIAS (B)
116-22A SG B (+)
116-22B SG B (-)
2/4 GAIN 2 (B)
2/4 TRACKING (B)
2/4 TRACK SIGN (B)
SG A/B (A) 1/4
SG CMP (A) 1/4
BIM DRIVE A 116-23A DT-28, 390-5
BIM A/B (A) 1/4
SG A/B (B) 1/4
SG CMP (B) 1/4
BIM DRIVE B 116-23B DT-28, 390-6
BIM A/B (B) 1/4
TP201
TP203
TP204
TP205
TP207
TP208
E201
E202
IC201 (1/4) TL084CNS
IC201 (2/4) TL084CNS
IC201 (3/4) TL084CNS
IC201 (4/4) TL084CNS
IC202 (1/4) TL084CNS
IC202 (2/4) TL084CNS
IC202 (3/4) TL084CNS
IC202 (4/4) TL084CNS
IC203 (1/2) LM2903PS
IC203 (2/2) LM2903PS
IC204 (1/2) TL082CPS
IC204 (2/2) TL082CPS
IC204 (1/4) TL084CNS
IC204 (2/4) TL084CNS
IC204 (3/4) TL084CNS
IC204 (4/4) TL084CNS
IC205 (1/3) MC14053BF
IC205 (2/3) MC14053BF
IC205 (3/3) MC14053BF
IC206 (1/2) TL082CPS
IC206 (2/2) TL082CPS
IC207 (1/4) TL084CNS
IC207 (2/4) TL084CNS
IC207 (3/4) TL084CNS
IC207 (4/4) TL084CNS
IC208 (1/2) TL082CPS
IC208 (2/2) TL082CPS
IC209 (1/3) MC14053BF
IC210 (1/4) MC14053BF
IC210 (2/4) MC14053BF
IC210 (3/4) MC14053BF
IC210 (4/4) MC14053BF
IC215 (3/4) MC14053BF
DT-28 BOARD (3/4)
1-640-682-11
BVW-D75PS : #10001-

DT-28 BOARD (4/4)
Dynamic Tracking
DT-29 BOARD
Dynamic Tracking

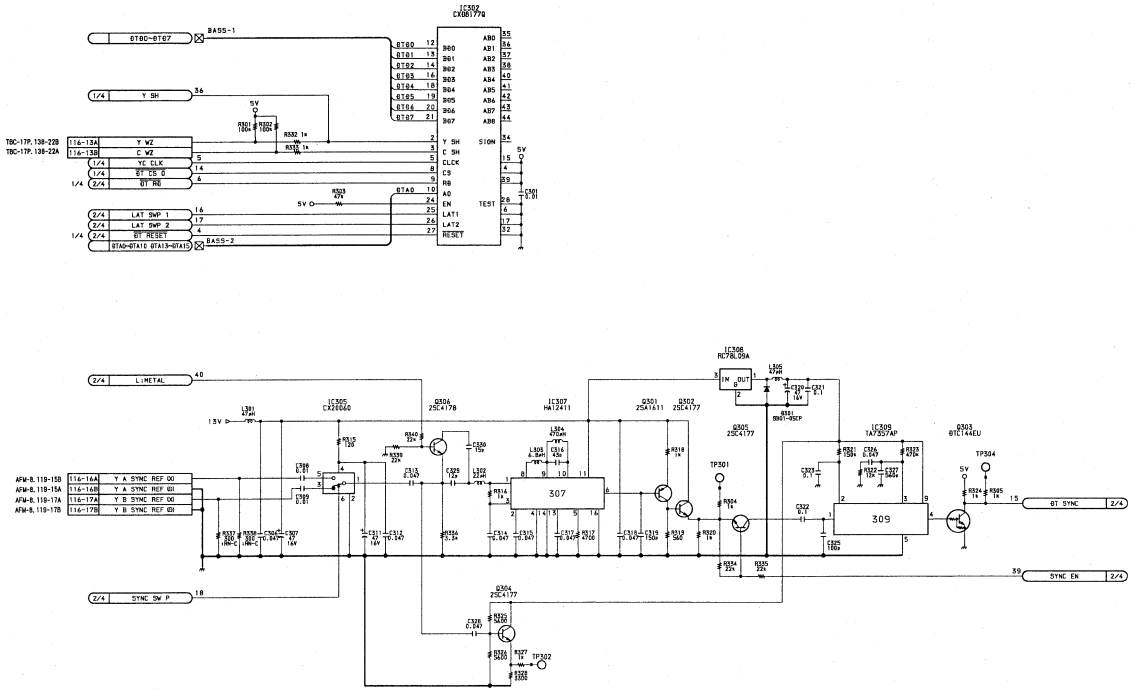

DT-28 BOARD **(4/4)**

1-640-682-11
BVW-D75PS ; # 10001-

DT-28 (4/4)/29 BOARD

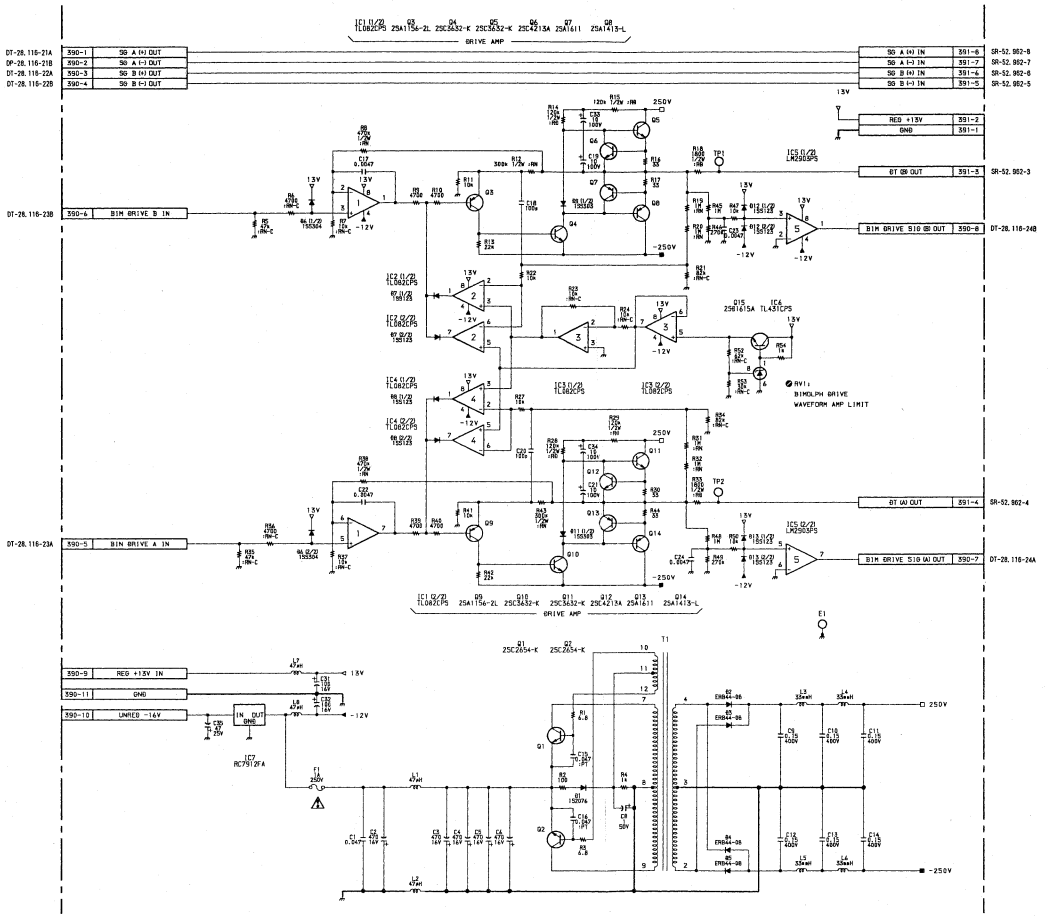

DT-29 BOARD

1-640-693-11
BVW-D75PS : #10001-

14-123

DR-118B BOARD (1/4)

Drum Error Amplifier Threading Motor Drive, Capstan/Reel Motor Drive, Top/End Sensor

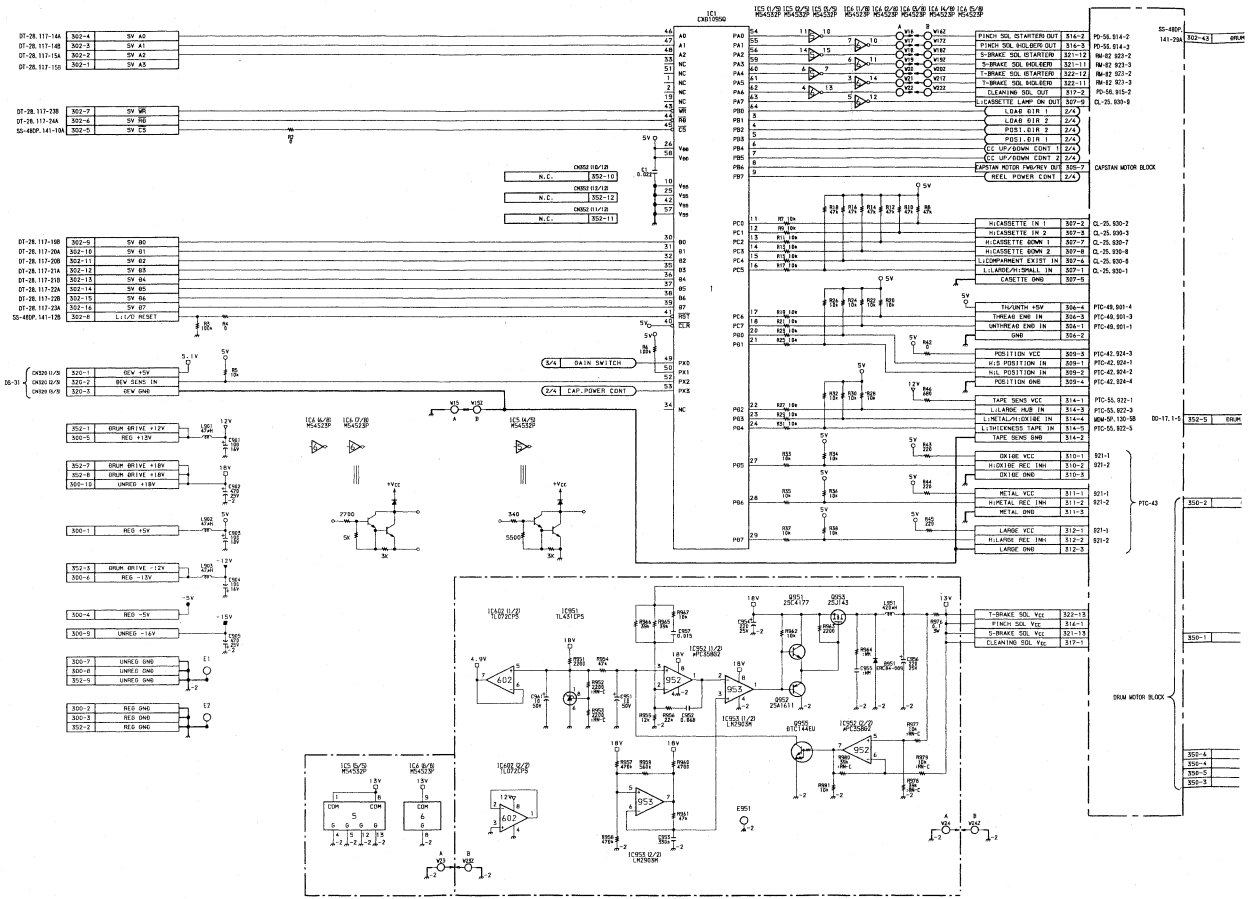

DR-118B BOARD (1/4)

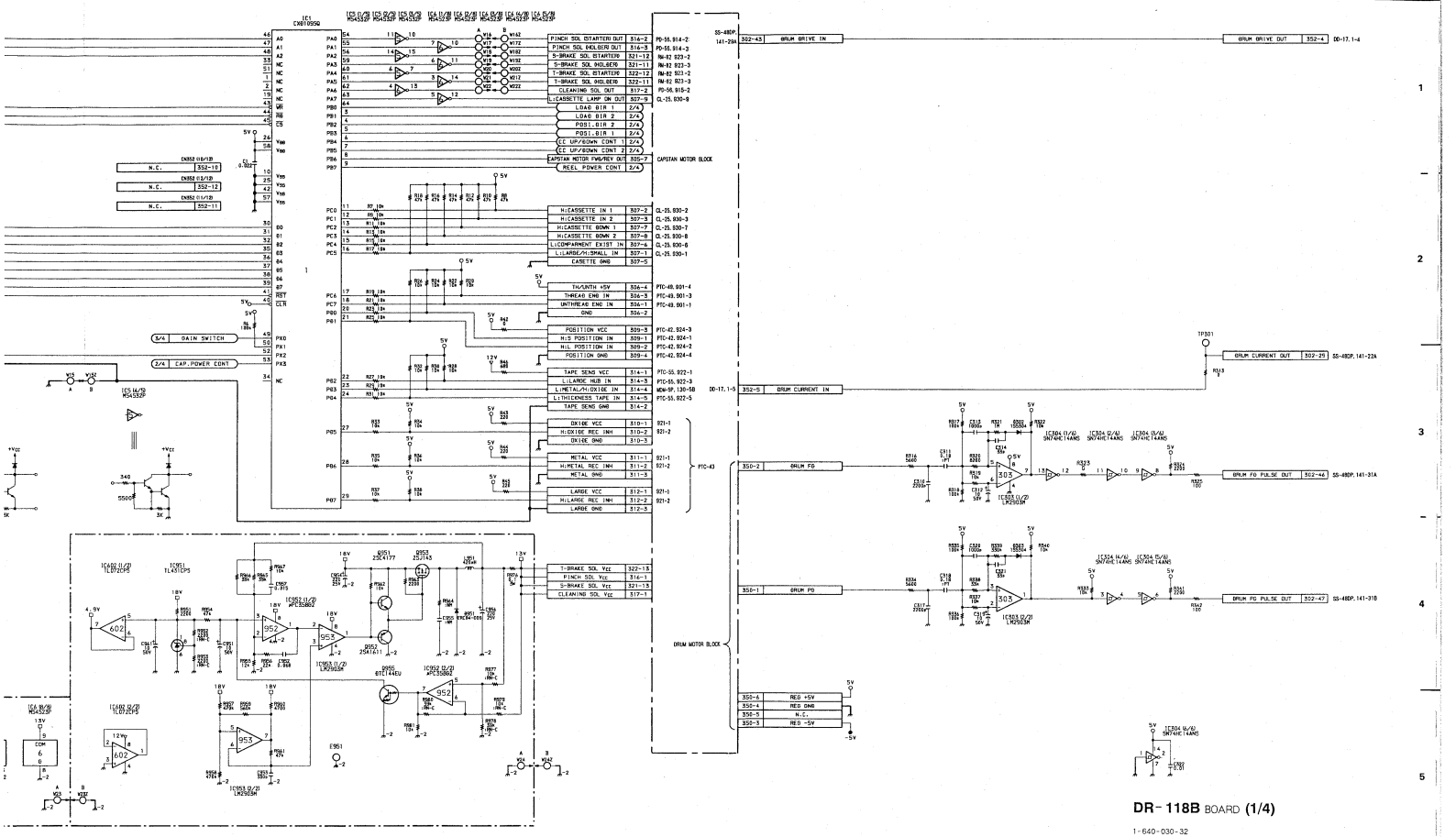

DR-118B BOARD (1/4)

1-640-030-32
5VW-D7SPS ; # 10001-

DR-118B BOARD (2/4)

Drum Error Amplifier Threading Motor Drive,
Capstan/Reel Motor Drive, Top/End Sensor

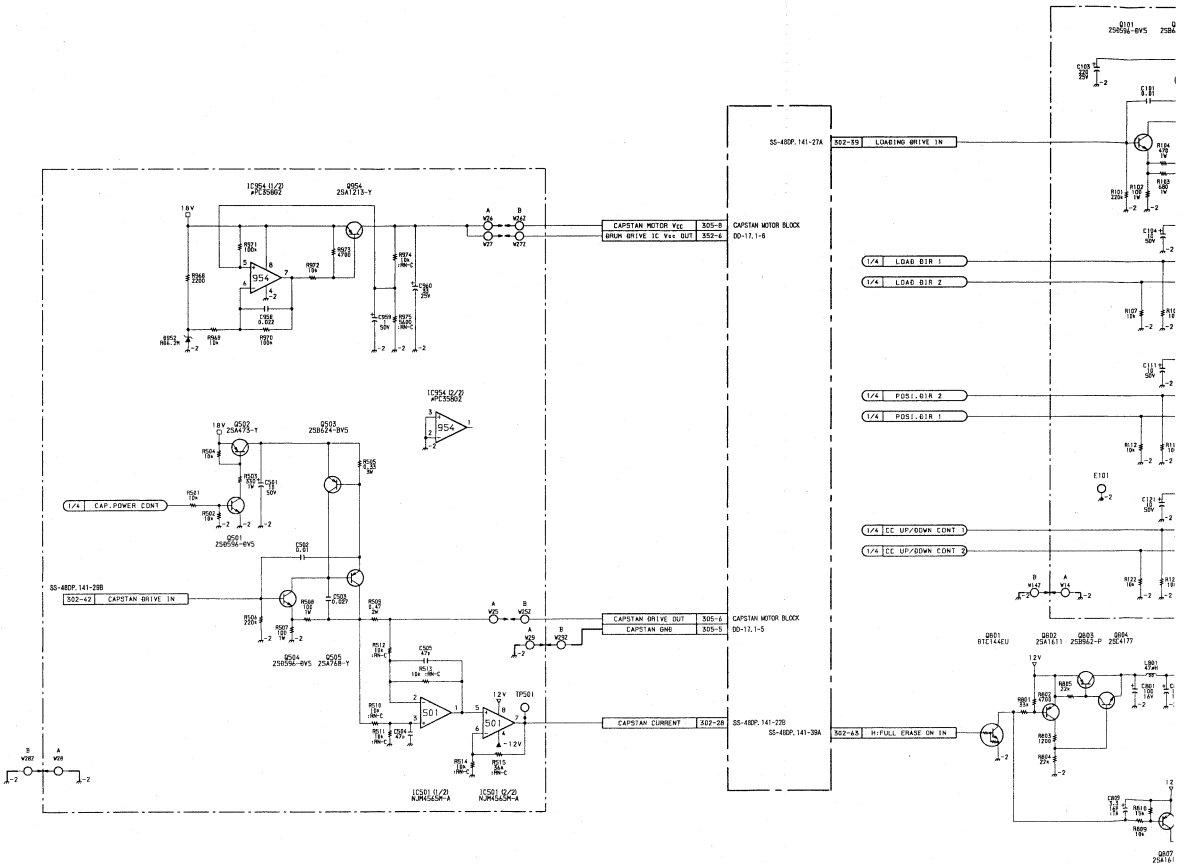

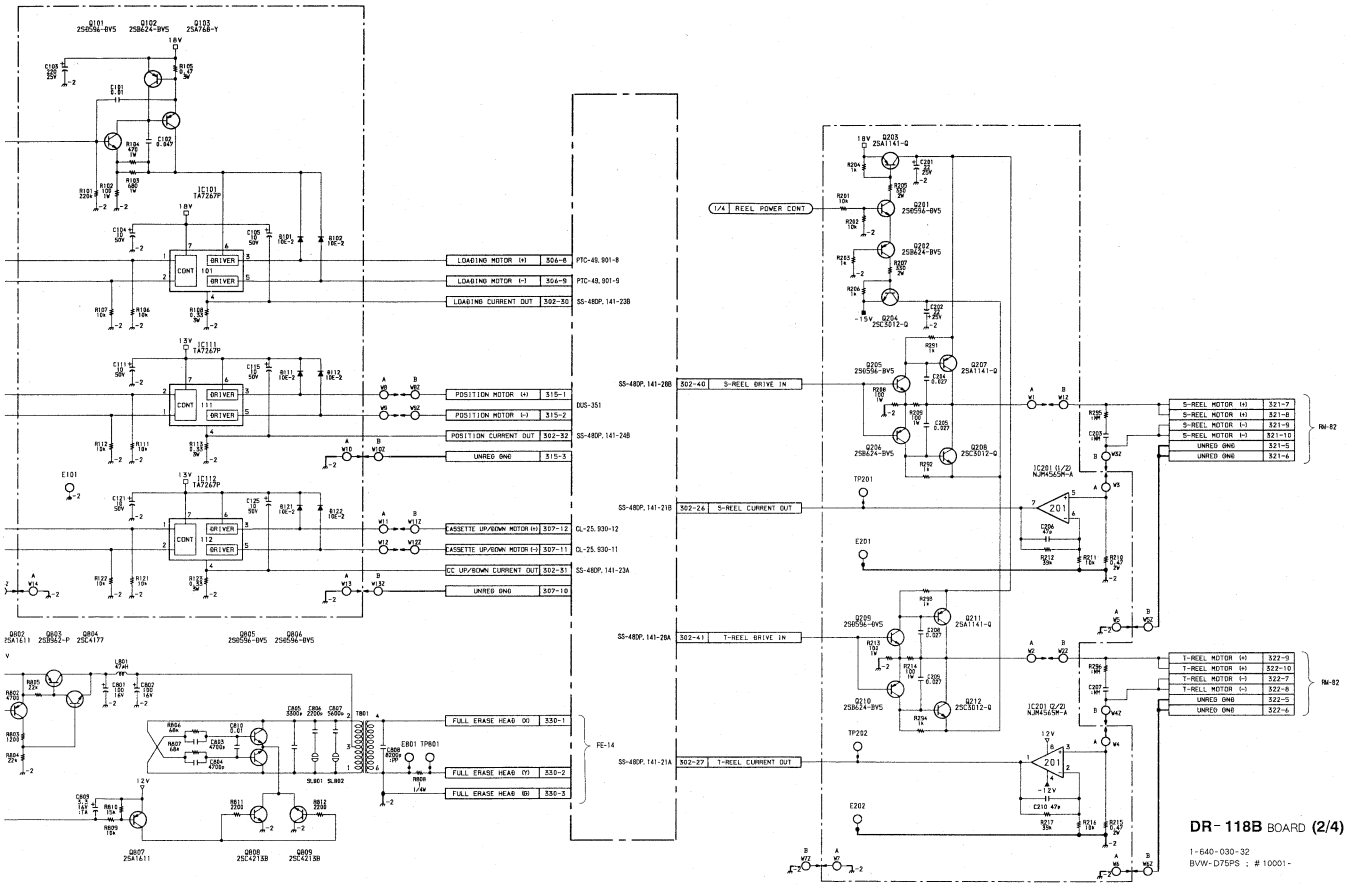
1/4 REEL POWER CONT
LOADING MOTOR (+) 306-8
LOADING MOTOR (-) 306-9
LOADING CURRENT OUT 302-30
POSITION MOTOR (+) 315-1
POSITION MOTOR (-) 315-2
POSITION CURRENT OUT 302-32
UNREG GND 315-3
CASSETTE UP/DOWN MOTOR (+) 307-12
CASSETTE UP/DOWN MOTOR (-) 307-11
CC UP/DOWN CURRENT OUT 302-31
UNREG GND 307-10
FULL ERASE HEAD 00 330-1
FULL ERASE HEAD (Y) 330-2
FULL ERASE HEAD (0) 330-3
SS-48DP, 141-20B 302-40 S-REEL DRIVE IN
SS-48DP, 141-21B 302-26 S-REEL CURRENT OUT
SS-48DP, 141-28A 302-41 T-REEL DRIVE IN
SS-48DP, 141-21A 302-27 T-REEL CURRENT OUT
S-REEL MOTOR (+) 321-7
S-REEL MOTOR (+) 321-8
S-REEL MOTOR (-) 321-9
S-REEL MOTOR (-) 321-10
UNREG GND 321-5
UNREG GND 321-6
T-REEL MOTOR (+) 322-9
T-REEL MOTOR (+) 322-10
T-REEL MOTOR (-) 322-7
T-REEL MOTOR (-) 322-8
UNREG GND 322-5
UNREG GND 322-6
DR-118B BOARD (2/4)
1-640-030-32
BVW-D75PS : # 10001-

DR-118B BOARD (3/4)

Drum Error Amplifier Threading Motor Drive,
Capstan/Reel Motor Drive, Top/End Sensor

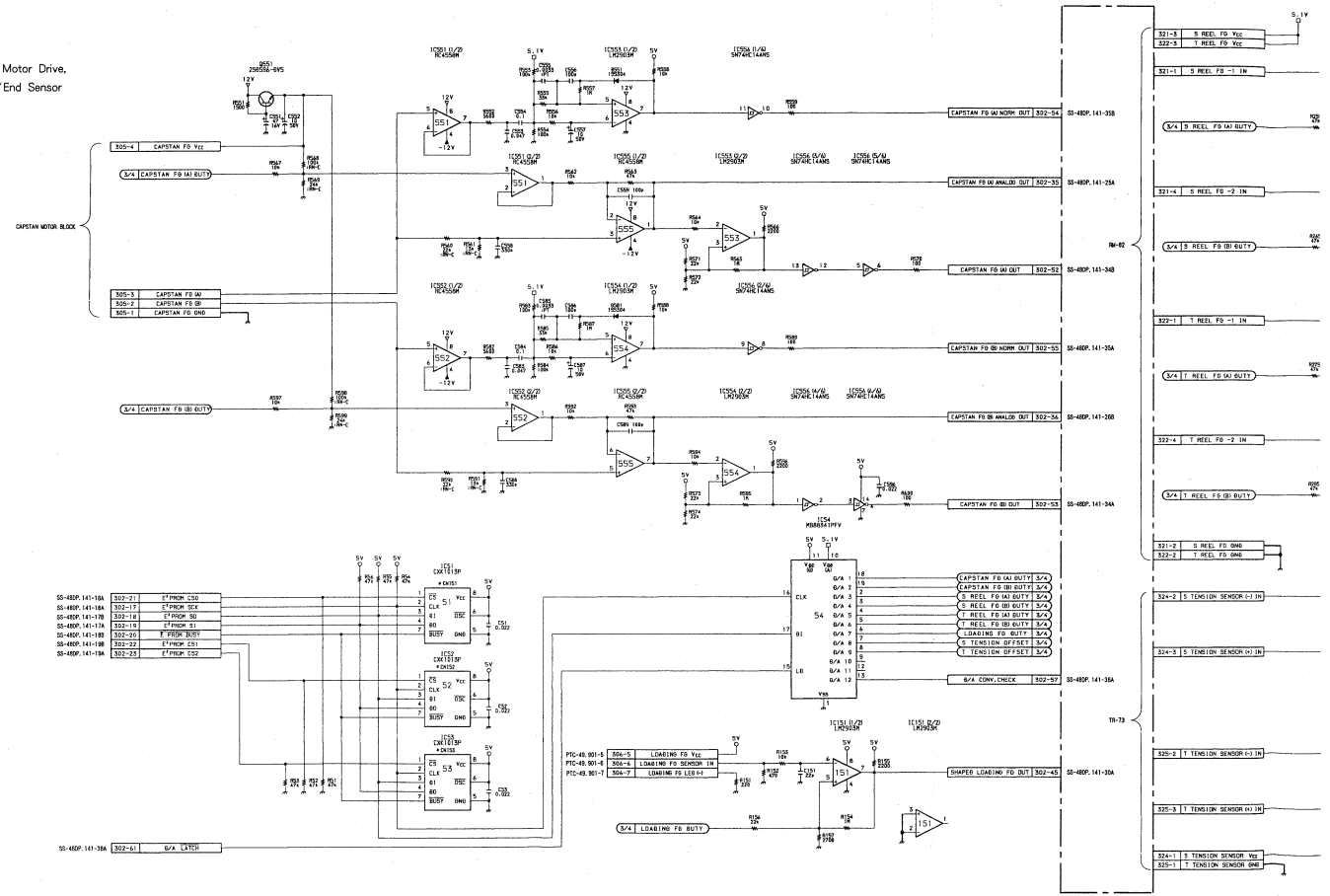

A | B | C | D | E | F | G | H

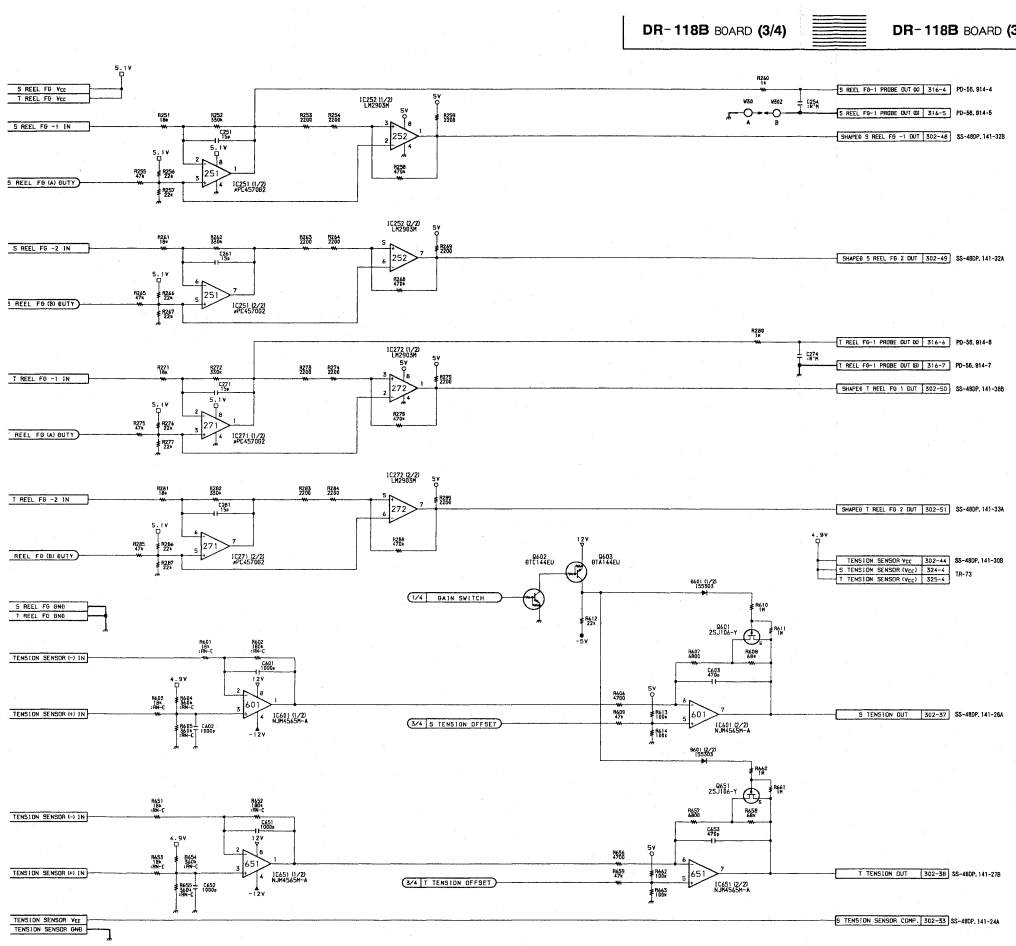

DR-118B BOARD **(3/4)**

1-640-030-32
8VW-D75PS ; # 10001-

14-129

DR-118B (4/4), DD-17 BOARD

DR-118B BOARD (4/4)
Drum Error Amplifier Threading Motor Drive, Capstan/Reel Motor Drive, Top/End Sensor
DD-17 BOARD
Drum Motor Drive

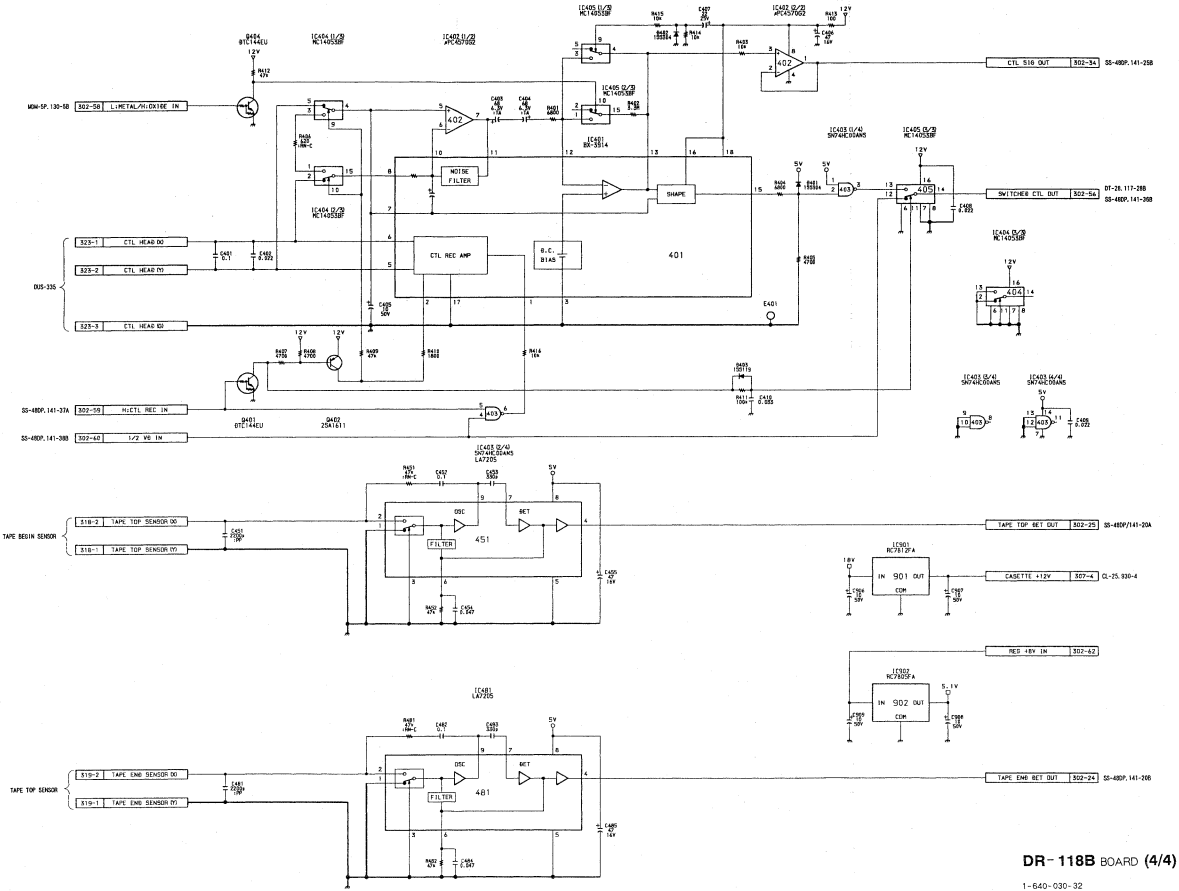

DR-118B BOARD (4/4)

1-640-030-32
BVW-D75PS ; #10001-

DR-118B (4/4), DD-17 BOARD

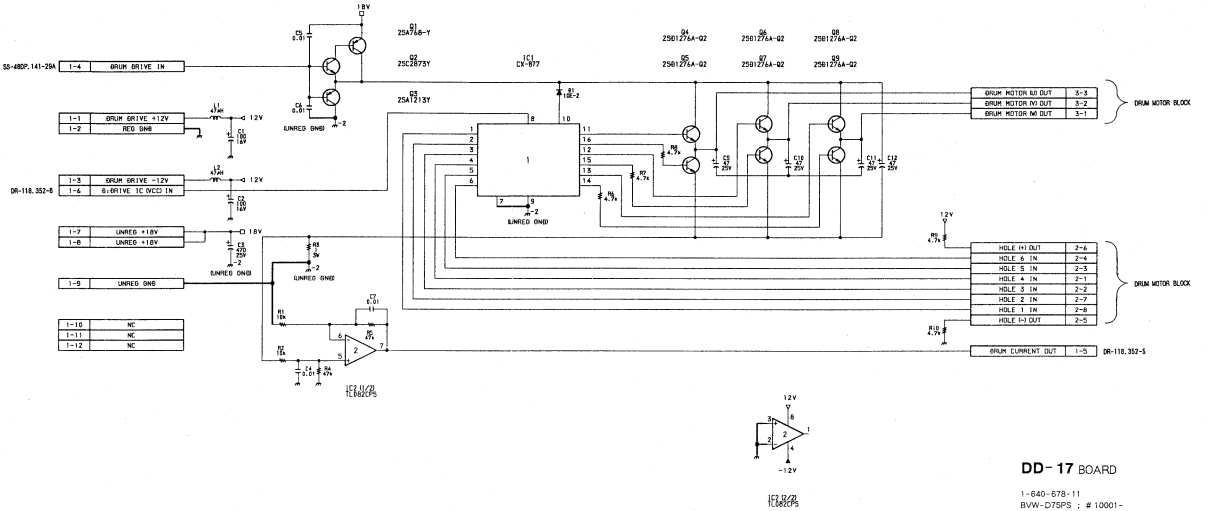

DD-17 BOARD

1-640-678-11
BVW-D75PS ; # 10001-

14-131

TR-73, RM-82, PD-56, DS-31 BOARD

TR-73 BOARD
Tension Regulator Tension Detection
RM-82 BOARD
Reel Motor
PD-56 BOARD
Pinch Plunger
DS-31 BOARD
DEW (Condensation) Sensor

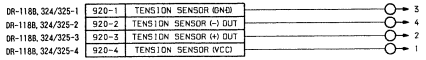

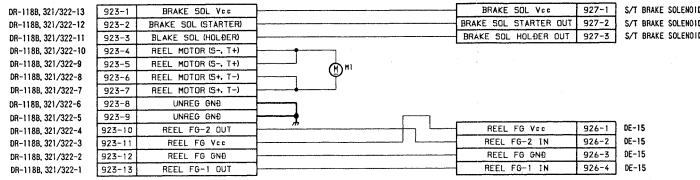

TR-73 BOARD

1-640-161-11
BVW-D75PS ; #10001-

RM-82 BOARD

1-640-166-11
BVW-D75PS ; #10001-

14-133

TR-73, RM-82, PD-56, DS-31 BOARD

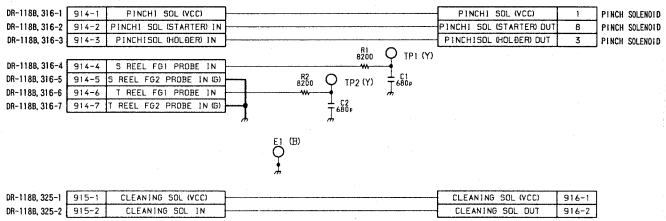

PD-56 BOARD

1-640-162-11
BVW-D75PS ; # 10001-

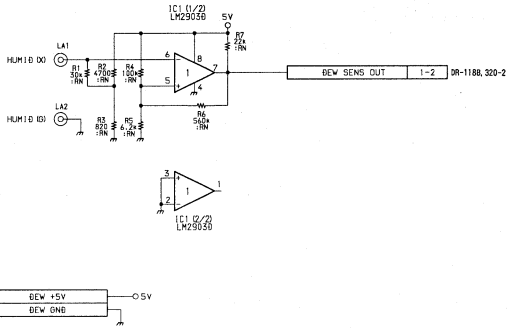

DS-31 BOARD

1-640-167-11
BVW-D75PS ; # 10001-

14-133

PTC-42 BOARD
Reel Base Large/Small Detection
PTC-43 BOARD
REC inhibit
PTC-49 BOARD
Threading End Detection
PTC-54 BOARD
Loading Motor Pulse Detection
PTC-55 BOARD
Cassette Data Detection

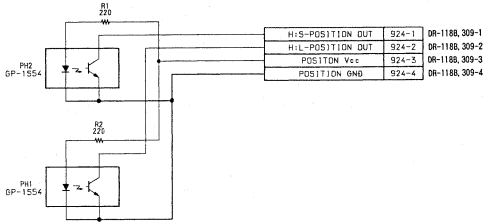

PTC-42 BOARD

1-640-168-11
BVW-D75PS ; #10001-

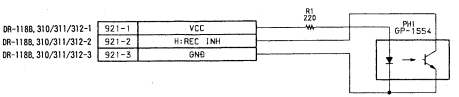

PTC-43 BOARD

1-640-169-11
BVW-D75PS ; #10001-

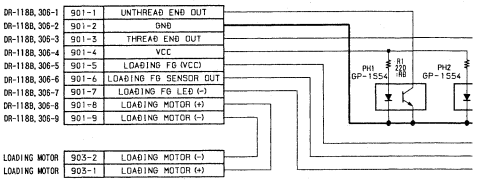

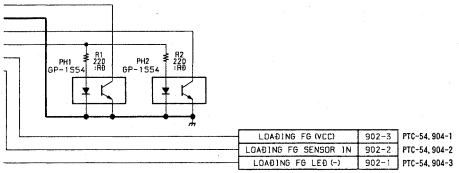

PTC-49 BOARD

1-640-164-11
BVW-D75PS : #10001-

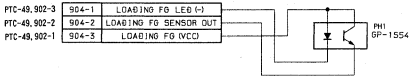

PTC-54 BOARD

1-640-163-11
BVW-D75PS : #10001-

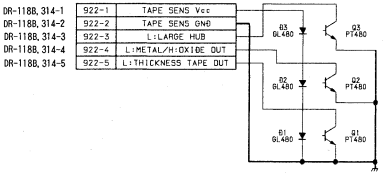

PTC-55 BOARD

1-640-165-11
BVW-D75PS : #10001-

CL-25 BOARD
Cassette Down Detection, Up-Down Motor
LP-57 BOARD
Cassette up Compartment Lamp
PC-62 BOARD
Cassette-in Detection, Large/Small Cassette Detection
AC-107 BOARD
Power Supply

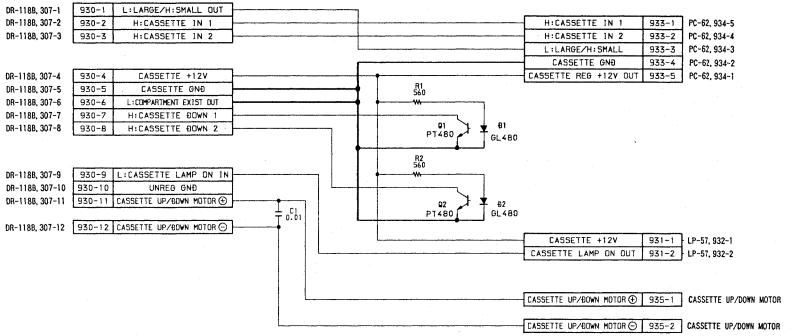

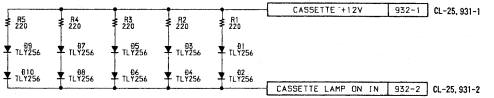

CL-25, 933-5
CL-25, 933-4
CL-25, 933-3
CL-25, 933-2
CL-25, 933-1

CL-25 BOARD

1-640-170-12
BVW-D75PS : #10001-

LP-57 BOARD

1-640-172-11
BVW-D75PS : #10001-

A B C D E F G H I

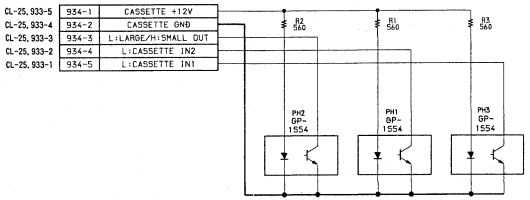

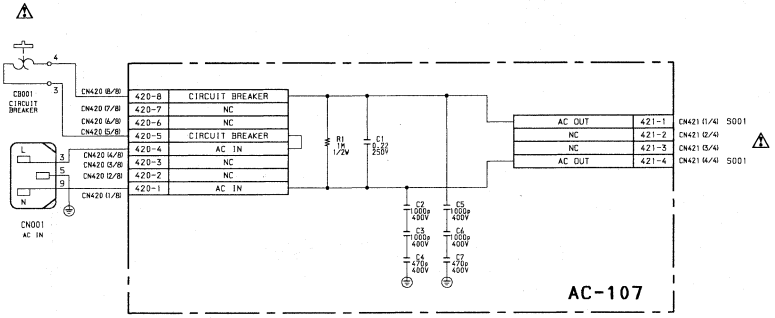

PC-62 BOARD

1-640-171-11
BVW-D75PS ; # 10001-

AC-107 BOARD

1-640-676-11
BVW-D75PS ; # 10001-

KY-188D/205/206, DP-136, PT-9, PTC-39 BOARD

KY-188D BOARD
Keyboard
KY-205 BOARD
Keyboard
KY-206 BOARD
Keyboard
DP-136 BOARD
Time Counter Display
PT-9 BOARD
Power Transistor
PTC-39 BOARD
Search Dial

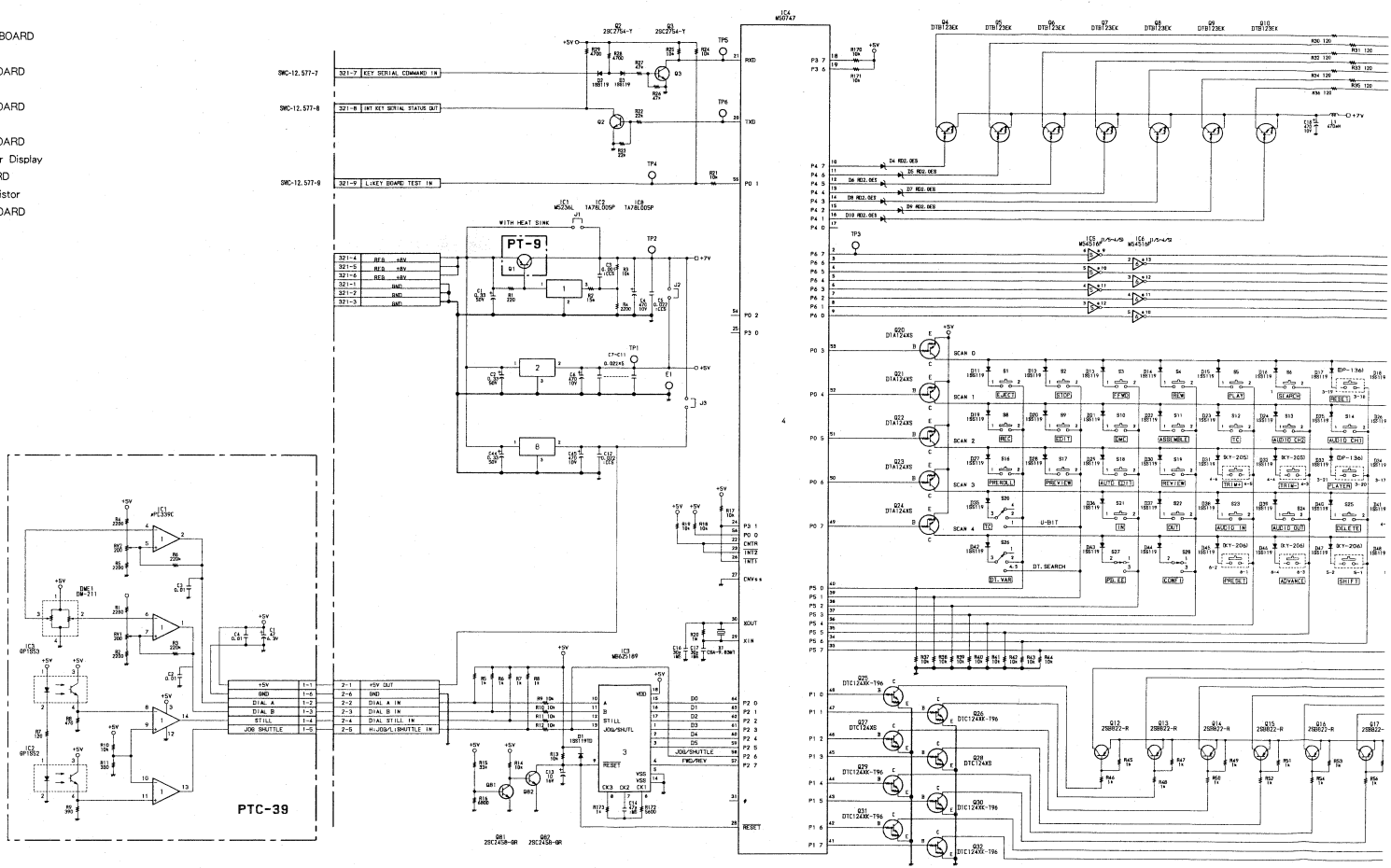

14-139

A | B | C | D | E | F | G | H | I

KY-188D/205/206, DP-136, PT-9, PTC-39 BOARD

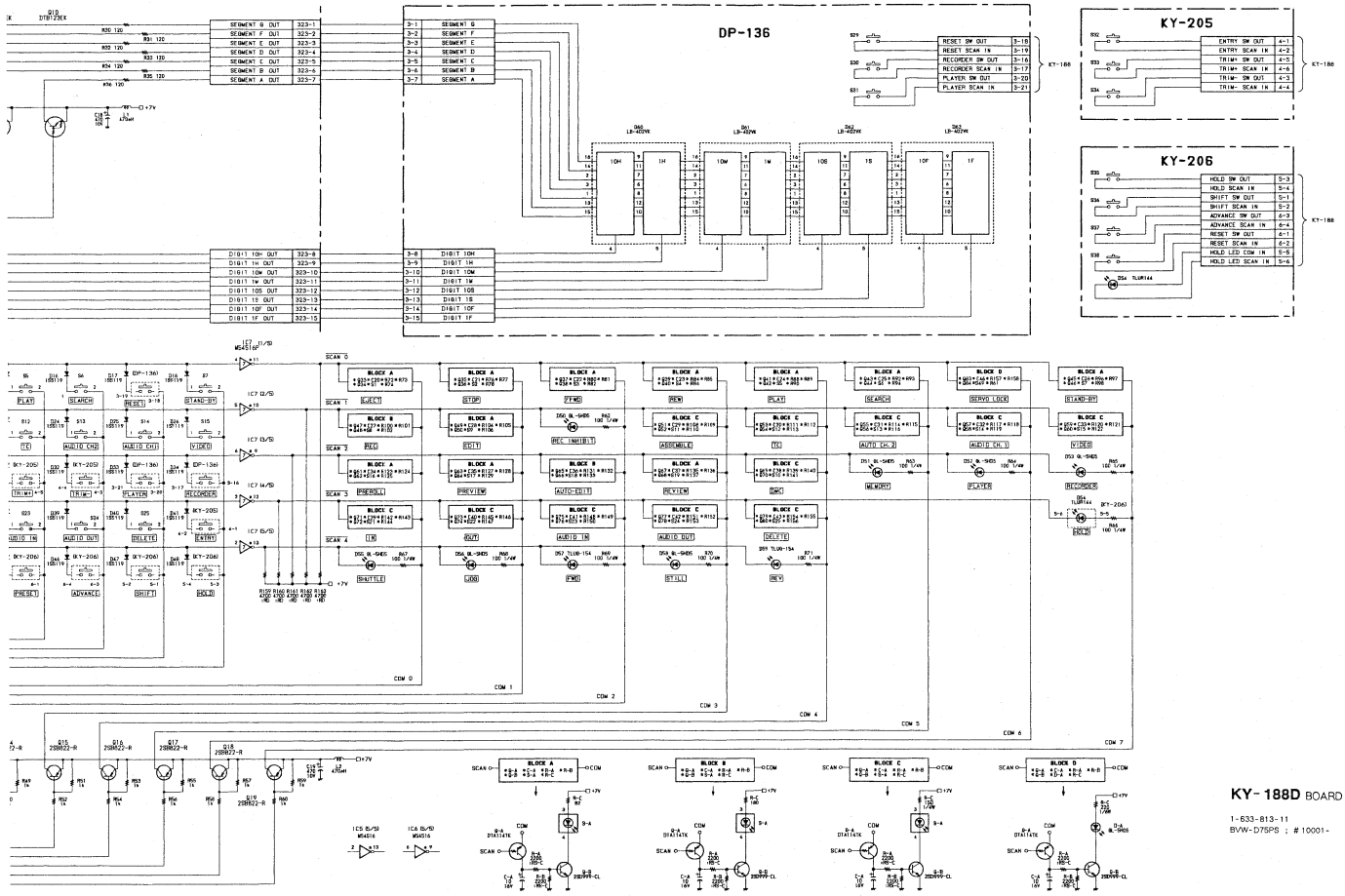

KY-188D BOARD

1-633-813-11
BVW-D75PS : # 10001-

14-139

SWC-12P BOARD

Hours Meter, Menu Setup

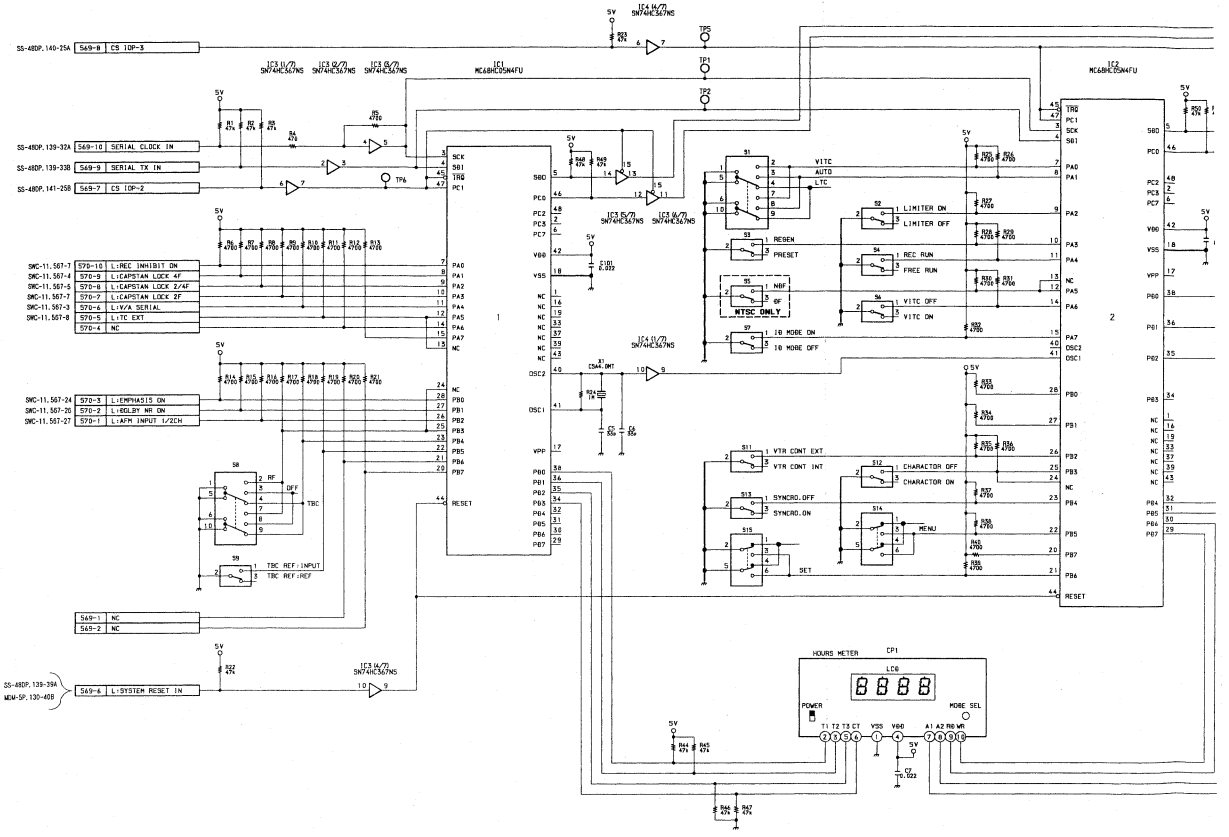

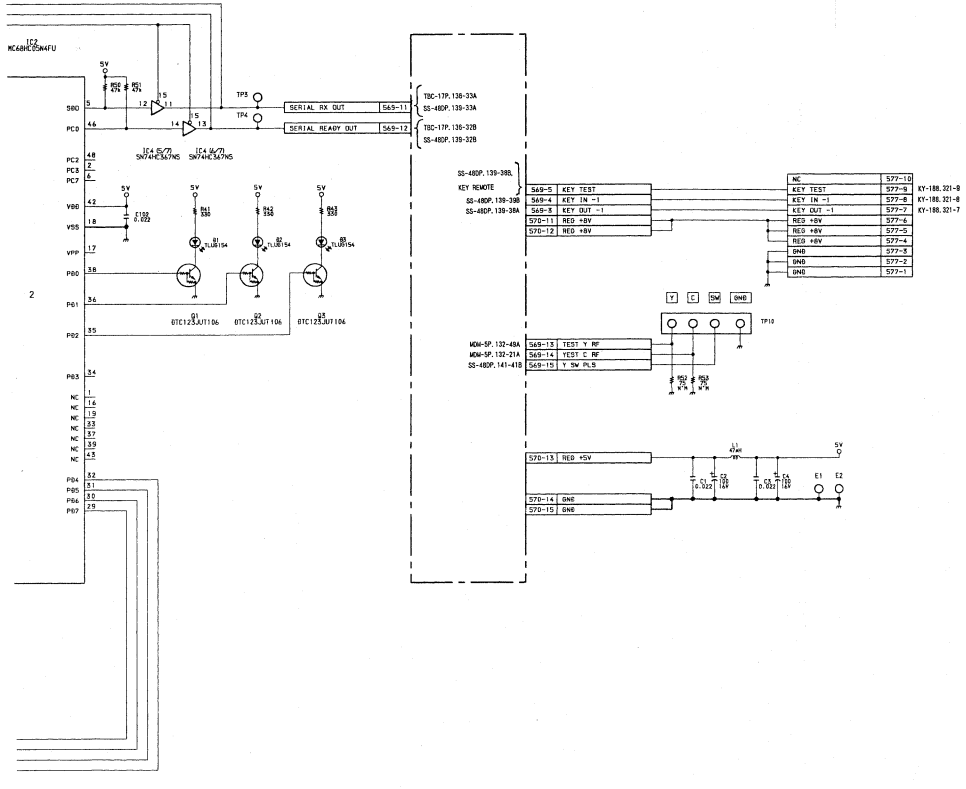

SWC-12P BOARD

1-640-691-11
8VW-D75PS ; # 10001-

MB-394 BOARD (1/8)
Mother Board

MDM-5P

CN130

	A		B		
	GND	1	GND		
	NC	2	NC		
	NC	3	NC		
	NC	4	L:DT HEAD SEL OUT	118-25B, 140-30B, 262-064	168
	NC	5	L:METAL/Hi:OXIDE OUT	118-20B, 114-22B, 250-08A, 262-05A, 121-20B, 141-57B, 138-34B, 135-20A , 120-06B	124
	NC	6	1/2 V0 OUT	140-16B	273
	NC	7	NC		
	NC	8	NC		
	NC	9	C-A REC I CONT IN	121-22A	209
	NC	10	C-B REC I CONT IN	121-22B	210
	NC	11	Y-A REC I CONT IN	121-18A	203
	NC	12	Y-B REC I CONT IN	121-18B	204
	NC	13	NC		
	NC	14	INPUT SEL 1 OUT	139-25B	274
	NC	15	INPUT SEL 2 OUT	139-25A	275
	NC	16	INPUT SEL 3 OUT	140-21A	276
	NC	17	Hi:VIDEO REC/EE MODE OUT	135-21A, 141-48A, 118-18B, 250-08B	162
	NC	18	NC		
	NC	19	C REC RF 00 IN	121-26B	212
	NC	20	C REC RF 01 IN	121-26A	211
	NC	21	NC		
277	134-45A	MOD-C 00 OUT	NC		
278	134-45B	MOD-C 01 OUT	NC		
	NC	24	NC		
	NC	25	NC		
	NC	26	Y REC RF 00 IN	121-16B	202
	NC	27	Y REC RF 01 IN	121-16A	201
	NC	28	NC		
279	134-50A	MOD-Y 00 OUT	NC		
280	134-50B	MOD-Y 01 OUT	NC		
	NC	31	NC		
	NC	32	C REC CLP PLS OUT	134-47A	281
	NC	33	Y REC CLP PLS OUT	134-48A	282
	NC	34	NC		
	NC	35	SERIAL CLK OUT	139-32A, 136-32A, 272-001, 269-010	283
	NC	36	SERIAL READY IN	139-32B, 136-32B, 269-012, 272-004	284
	NC	37	SERIAL RX IN	139-33A, 136-33A, 269-011, 272-003	285
	NC	38	SERIAL TX OUT	139-33B, 136-33B, 269-009, 272-002	286
	NC	39	SERIAL CS MOM OUT	139-34A	287
	NC	40	SYSTEM RESET OUT	139-39A, 136-34A, 117-24B, 269-006, 272-006	262
	NC	41	NC		
-5V	REG -5V	42	REG -5V		-5V
	REG -5V	43	REG -5V		
8V	REG +8V	44	REG +8V		8V
	REG +8V	45	REG +8V		
5V	REG +5V	46	REG +5V		5V
	REG +5V	47	REG +5V		
	GND	48	GND		
	GND	49	GND		
	GND	50	GND		

MDM-5P

CN132

		A		B	
		GND	1	GND	
		GND	2	GND	
		GND	3	GND	
13V		REG +13V	4	REG +13V	
-13V		REG -13V	5	REG -13V	
		NC	6	NC	
		NC	7	NC	
165	141-42A, 118-22B, 138-10A	Li:C 00 PLS IN	8	NC	
166	118-23B, 141-41A, 138-11A	C SW PLS OUT	9	C W CLP PLS	138-12A
		NC	10	NC	
328	301-005	C PB RF 00 OUT	11	NC	
327	301-004	C PB RF 01 OUT	12	NC	
		NC	13	NC	
		NC	14	NC	
		NC	15	NC	
		NC	16	NC	
		NC	17	NC	
		NC	18	C DEMOD 00 IN	138-42A
		NC	19	C DEMOD 01 IN	138-42B
		NC	20	NC	
295	269-014	TEST C RF 00 IN	21	NC	
	**	TEST C RF 01 IN	22	NC	
		NC	23	NC	
296	140-29A	Hi:FAST SEARCH OUT	24	Hi:VIDEO EE (DEMOD) OUT	141-48B, 138-24B
		NC	25	L:LOW BIG OUT	141-44A
299	138-26A	Hi:C REF INS OUT	26	Hi:C PEDESTAL INS OUT	138-26B
		NC	27	Hi:REF OSC ON OUT	140-31B, 138-27B
302	138-28A, S11B	Hi:Y REF INS OUT	28	Hi:Y PEDESTAL INS OUT	138-28B
		NC	29	L:PB NR S16 OUT	138-29B, 140-50A
221	138-30A, 116-18A	L:Y PCM MUTE OUT	30	L:C PCM MUTE OUT	138-30B, 116-18B
305	138-31A	TBC SPEED OUT	31	SV TAPE SPEED OUT	138-31B, 141-43A
		NC	32	NC	
307	141-42B, 138-33A, 117-13B	L:Y 00 PLS IN	33	NC	
		NC	34	NC	
310	273-004	VIDEO METER IN	35	Y RF ENV IN	116-19A
167	141-41B, 138-36A, 118-24B, 269-015	Y SW PLS OUT	36	Y W CLP PLS	138-36B
		NC	37	NC	
		NC	38	NC	
325	301-001	Y PB RF 00 OUT	39	NC	
326	301-002	Y PB RF 01 OUT	40	NC	
		NC	41	NC	
		NC	42	NC	
		NC	43	NC	
		NC	44	NC	
		NC	45	NC	
		NC	46	Y DEMOD 00 IN	138-44A
		NC	47	Y DEMOD 01 IN	138-44B
		NC	48	NC	
316	269-013	TEST Y RF 00 IN	49	NC	
	**	TEST Y RF 01 IN	50	GND	

MB-394 BOARD (1/8)

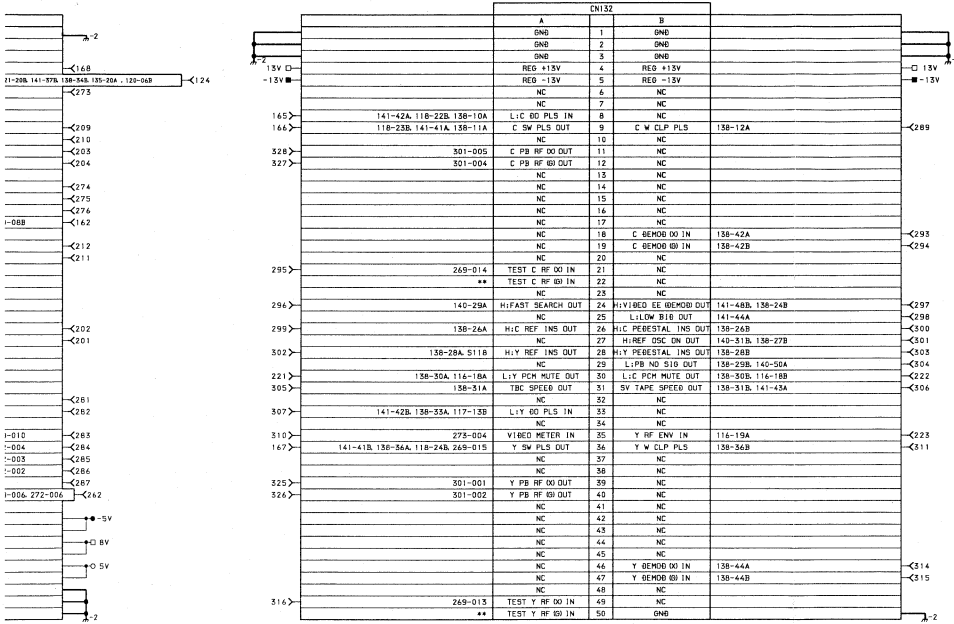

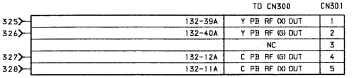

MB-394 BOARD (1/8)

1-640-677-11
BVW-D75PS : #10001-

NOTE : —< XXX mark means the connection data in this board. Same numbers are connected with printed foiled pattern.

14-143

MB-394 BOARD (2/8)
Mother Board

DIF-11P

CN133

		A		B		
		NC	1	NC		
235	113-24B	BA AUDIO CH1 DO IN	2	BA AUDIO CH1 IO IN	113-24A	232
		NC	3	NC		
233	113-25B	BA AUDIO CH2 DO IN	4	BA AUDIO CH2 IO IN	113-25A	234
		NC	5	NC		
237	113-26B	BA AUDIO CH3 DO IN	6	BA AUDIO CH3 IO IN	113-26A	236
		NC	7	NC		
239	113-27B	BA AUDIO CH4 DO IN	8	BA AUDIO CH4 IO IN	113-27A	238
		NC	9	NC		
11	110-19B, 112-21A	OUTPUT CH-1 SIG DO OUT	10	OUTPUT CH-1 SIG IO OUT	110-19A, 112-21B	10
		NC	11	NC		
13	110-21B, 112-22A	OUTPUT CH-2 SIG DO OUT	12	OUTPUT CH-2 SIG IO OUT	112-22B, 110-21A	12
		NC	13	NC		
		NC	14	NC		
		NC	15	NC		
15	112-23A, 110-23B, 118-13B, 250-07A	OUTPUT CH-3 SIG DO OUT	16	OUTPUT CH-3 SIG IO OUT	112-23B, 118-13A, 110-23A, 250-07B	14
		NC	17	NC		
17	110-25B, 112-24A, 118-07B, 250-10A	OUTPUT CH-4 SIG DO OUT	18	OUTPUT CH-4 SIG IO OUT	112-24B, 110-25A, 118-07A, 250-10B	16
		NC	19	NC		
		NC	20	NC		
		NC	21	NC		
94	212-005	AES/EBU CH1/2 OUT DO	22	AES/EBU CH1/2 OUT IO	212-006	75
		NC	23	NC		
96	212-007	AES/EBU CH3/4 OUT DO	24	AES/EBU CH3/4 OUT IO	212-008	97
		NC	25	NC		
36	212-001	AES/EBU CH1/2 IN DO	26	AES/EBU CH1/2 IN IO	212-002	35
		NC	27	NC		
96	212-003	AES/EBU CH3/4 IN DO	28	AES/EBU CH3/4 IN IO	212-004	95
		NC	29	NC		
313	220-010	MONITOR Y OUT DO	30	MONITOR Y OUT IO	220-011	312
		NC	31	NC		
292	220-008	MONITOR R-Y OUT DO	32	MONITOR R-Y OUT IO	220-009	291
		NC	33	NC		
290	220-006	MONITOR B-Y OUT DO	34	MONITOR B-Y OUT IO	220-007	288
		AUDIO GND	35	AUDIO GND		
		NC	36	NC		
		AUDIO GND	37	AUDIO GND		
		NC	38	NC		
		AUDIO GND	39	AUDIO GND		
		NC	40	NC		
		NC	41	NC		
-5V		REG -5V	42	REG -5V		-5V
		REG -5V	43	REG -5V		
8V		REG +8V	44	REG +8V		8V
		REG +8V	45	REG +8V		
5V		REG +5V	46	REG +5V		5V
		REG +5V	47	REG +5V		
		GND	48	GND		
		GND	49	GND		
		GND	50	GND		

A-4 A-2

DIF-11P

CN134

		A		B		
		NC	1	NC		
		NC	2	NC		
		NC	3	NC		
		NC	4	NC		
362	137-05A	TBC'e R-Y DO OUT	5	TBC'e R-Y IO OUT	137-05B	363
		NC	6	NC		
364	137-07A	TBC'e B-Y DO OUT	7	TBC'e B-Y IO OUT	137-07B	365
		NC	8	NC		
366	137-09A	TBC'e Y DO OUT	9	TBC'e Y IO OUT	137-09B	367
		NC	10	NC		
368	137-11A	VD SYNC OUT	11	VD	136-35A, 139-35A	369
		NC	12	NC		
372	137-13A	VD FLD O/E OUT	13	NC		
		NC	14	NC		
374	137-15A	ENE CLP PLS	15	NC		
		NC	16	NC		
		NC	17	NC		
		NC	18	NC		
384	136-07A	INPUT REF DO IN	19	INPUT REF IO IN	136-07B	385
		NC	20	NC		
		NC	21	NC		
		NC	22	NC		
390	139-26A	CHARA GATE OUT	23	CHARA SIG OUT	139-36B	391
		NC	24	NC		
394	140-24A	AV SERIAL CONT SYTX	25	AV SERIAL CONT SYRX	140-24B	395
		NC	26	EX27 OUT	137-26A	396
		NC	27	CK13	137-27A	397
		NC	28	B-Y CLK OUT	137-28A	398
		NC	29	NC		
		NC	30	D HBL OUT	137-30A	400
401	137-31A	DC 1	31	DC 0	137-31B	402
403	137-32A	DC 3	32	DC 2	137-32B	404
405	137-33A	DC 5	33	DC 4	137-33B	406
407	137-34A	DC 7	34	DC 6	137-34B	408
409	137-35A	DC 9	35	DC 8	137-35B	410
		NC	36	NC		
413	137-37A	DY 1	37	DY 0	137-37B	414
415	137-38A	DY 3	38	DY 2	137-38B	416
417	137-39A	DY 5	39	DY 4	137-39B	418
419	137-40A	DY 7	40	DY 6	137-40B	420
421	137-41A	DY 9	41	DY 8	137-41B	422
		NC	42	NC		
		NC	43	NC		
		GND	44	GND		
277	130-22A	MOD-C DO IN	45	MOD-C IO IN	130-23A	278
		GND	46	GND		
281	130-32B	C REC CLP PLS IN	47	NC		
282	130-33B	Y REC CLP PLS IN	48	NC		
		GND	49	GND		
279	130-29A	MOD-Y DO IN	50	MOD-Y IO IN	130-30A	280

A-2 A-2

MB-394 BOARD (2/8)

DIF-11P

CN134

		A		B		
		NC	1	NC		
		NC	2	NC		
		NC	3	NC		
		NC	4	NC		
362	137-05A	TBC'a R-Y 00 OUT	5	TBC'a R-Y 01 OUT	137-05B	363
		NC	6	NC		
364	137-07A	TBC'a B-Y 00 OUT	7	TBC'a B-Y 01 OUT	137-07B	365
		NC	8	NC		
366	137-09A	TBC'a Y 00 OUT	9	TBC'a Y 01 OUT	137-09B	367
		NC	10	NC		
368	137-11A	VO SYNC OUT	11	VB	136-35A, 139-35A	369
		NC	12	NC		
372	137-13A	VO FLG OVE OUT	13	NC		
		NC	14	NC		
376	137-15A	ENC CLP PLS	15	NC		
		NC	16	NC		
		NC	17	NC		
		NC	18	NC		
384	136-07A	INPUT REF 00 IN	19	INPUT REF 01 IN	136-07B	385
		NC	20	NC		
		NC	21	NC		
		NC	22	NC		
390	139-26A	CHARA GATE OUT	23	CHARA S10 OUT	139-36B	391
		NC	24	NC		
394	140-24A	AV SERIAL CONT SYTX	25	AV SERIAL CONT SYRX	140-24B	395
		NC	26	CK27 OUT	137-26A	396
		NC	27	CK13.5	137-27A	397
		NC	28	B-Y CLK OUT	137-28A	398
		NC	29	NC		
		NC	30	D HBL OUT	137-30A	400
401	137-31A	DC 1	31	DC 0	137-31B	402
403	137-32A	DC 3	32	DC 2	137-32B	404
405	137-33A	DC 5	33	DC 4	137-33B	406
407	137-34A	DC 7	34	DC 6	137-34B	408
409	137-35A	DC 9	35	DC 8	137-35B	410
		NC	36	NC		
413	137-37A	DY 1	37	DY 0	137-37B	414
415	137-38A	DY 3	38	DY 2	137-38B	416
417	137-39A	DY 5	39	DY 4	137-39B	418
419	137-40A	DY 7	40	DY 6	137-40B	420
421	137-41A	DY 9	41	DY 8	137-41B	422
		NC	42	NC		
		NC	43	NC		
		GND	44	GND		
277	130-22A	MOD-C 00 IN	45	MOD-C 01 IN	130-23A	278
		GND	46	GND		
281	130-32B	C REC CLP PLS IN	47	NC		
282	130-33B	Y REC CLP PLS IN	48	NC		
		GND	49	GND		
279	130-29A	MOD-Y 00 IN	50	MOD-Y 01 IN	130-30A	280

DIF-11P

CN135

		A		B		
		GND	1	GND		
		GND	2	GND		
		GND	3	GND		
		REG +13V	4	REG +13V		
		REG -15V	5	REG -15V		
		NC	6	NC		
		NC	7	NC		
		NC	8	NC		
		NC	9	NC		
		NC	10	NC		
		NC	11	NC		
430	139-37B	INPUT SYNC IN	12	NC		
		NC	13	NC		
		NC	14	NC		
432	137-47A	L:SERIAL CHECK	15	NC		
		NC	16	NC		
		NC	17	NC		
		NC	18	NC		
		NC	19	NC		
124	120-06A, 118-20B, 114-23A, 250-08A, 242-05A, 139-05B, 121-20B, 141-37A, 138-34B	L:METAL/HIDX10E OUT	20	NC		
162	141-48A, 250-08B, 118-18B, 130-17B	H:Y10E0 REC/EE MODE	21	NC		
		NC	22	NC		
		NC	23	NC		
		NC	24	NC		
		NC	25	NC		
437	139-26A	CF 10 S10 OUT	26	NC		
		NC	27	NC		
438	140-27A	VITC DATE OUT	28	NC		
		NC	29	NC		
439	140-27B	VITC OUT	30	NC		
		NC	31	NC		
		NC	32	NC		
		NC	33	NC		
		NC	34	NC		
		NC	35	NC		
		NC	36	NC		
		NC	37	NC		
		NC	38	NC		
		NC	39	NC		
		NC	40	NC		
		NC	41	NC		
		NC	42	NC		
		NC	43	NC		
		NC	44	NC		
		NC	45	NC		
		NC	46	NC		
		NC	47	NC		
		NC	48	NC		
		NC	49	NC		
		NC	50	NC		

MB-394 BOARD (2/8)

1-640-677-11
BVW-D75PS ; #10001-

NOTE : —< XXX mark means the connection data in this board. Same numbers are connected with printed foiled pattern.

14-145

MB-394 BOARD (3/8)
Mother Board

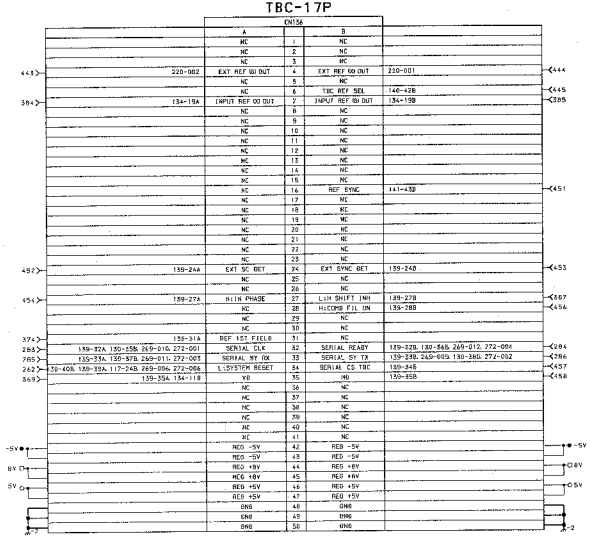

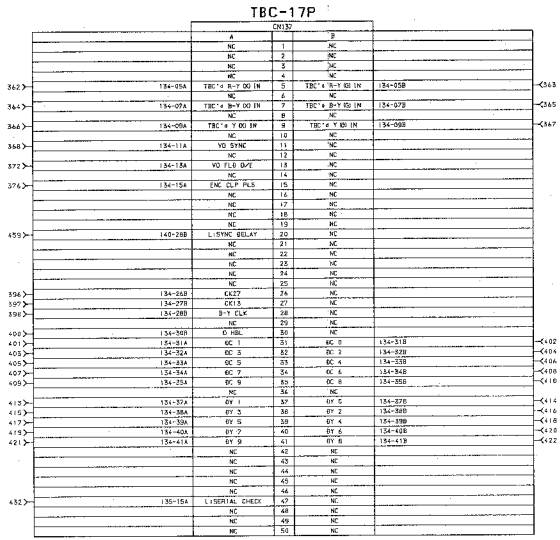

MB-394 BOARD (3/8)

TBC-17P

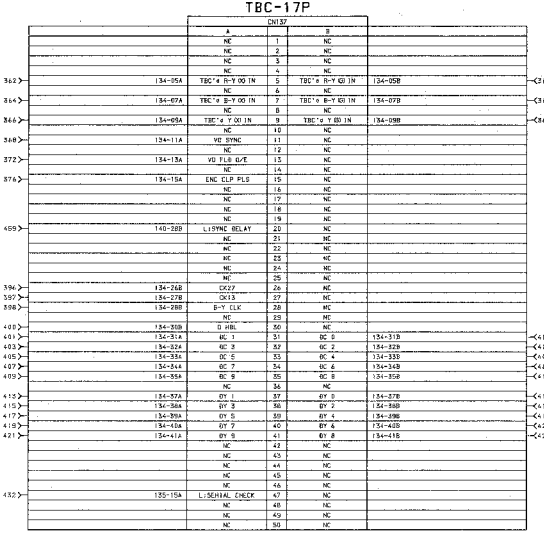

TBC-17P

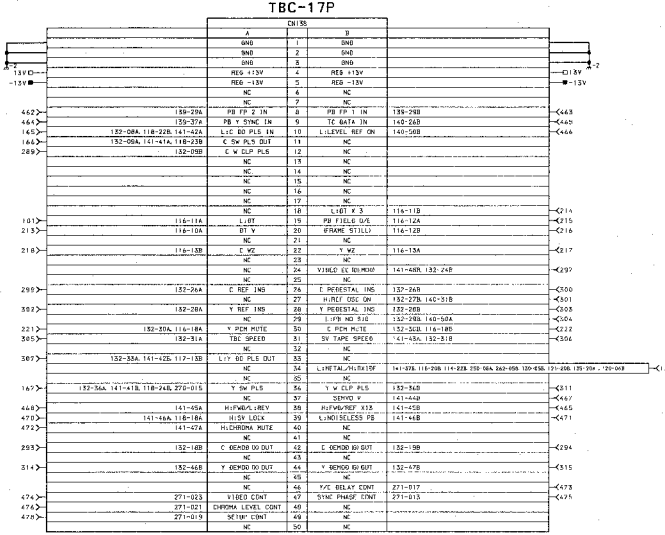

MB-394 BOARD (3/8)

1-640-677-11
SVW-D75PS ; #10001-

NOTE : –< XXX mark means the connection data in this board. Same numbers are connected with printed foiled pattern.

14-147

MB-394 BOARD (4/8)

Mother Board

SS-48DP

CN139

		A		B		
480	102-003	L:PLAY COMMAND OUT	1	L:F FWD COMMAND OUT	102-002	481
482	102-005	L:EJECT COMMAND OUT	2	L:REW COMMAND OUT	102-004	483
484	102-007	L:PAUSE COMMAND OUT	3	L:STOP COMMAND OUT	102-006	485
486	102-009	L:CUT IN COMMAND OUT	4	L:REC COMMAND OUT	102-008	487
488	102-011	L:CUT OUT COMMAND OUT	5	EDIT COMMAND	102-010	489
490	102-013	L:PLAY STATUS IN	6	L:F FWD STATUS IN	102-012	491
492	102-015	L:STANDBY STATUS IN	7	L:REW STATUS IN	102-014	493
494	102-017	L:PAUSE STATUS-1 I/O	8	L:STOP STATUS IN	102-016	495
496	102-019	L:CUT IN STATUS IN	9	L:REC STATUS IN	102-018	497
498	102-021	L:AU-1 INS COMMAND OUT	10	L:VIDEO INS COMMAND OUT	102-020	499
500	102-023	L:REV COMMAND OUT	11	L:AU-2 INS COMMAND OUT	102-022	501
502	102-025	SEARCH COMMAND B OUT	12	SEARCH COMMAND A OUT	102-024	503
504	102-027	L:TACH OUT	13	CTL OUT	102-026	505
506	102-030	L:STILL TENSION OUT	14	L:CAPSTAN LOCK IN	102-028	507
508	102-032	L:PAUSE STATUS-2 IN	15	H:NORMAL FWD OUT	102-031	509
510	102-034	SPARE	16	L:SEARCH COMMAND OUT	102-033	511
512	103-002, 104-002	TX (-)	17	TX (+)	103-007, 104-007	513
514	103-008, 104-008	RX (-)	18	RX (+)	103-003, 104-003	515
219	210-001	OUTPUT T/C (G)	19	OUTPUT T/C (X)	210-002	220
516	120-17B	REC T/C SIG IN	20	PB LTC (G) OUT		
147	115-28A	AU STB 0	21	PB LTC (X) OUT	120-17A	412
104	113-29A	AU STB 2	22	AU STB 1	113-29B	105
107	113-30B, 115-30B	AU SCK	23	AU SO	113-30A, 115-30A	106
452	136-24A	EXT SC DET	24	EXT SYNC DET	136-24B	453
275	130-15B	L:INPUT SEL 2	25	L:INPUT SEL 1	130-14B	274
437	135-26A	CF ID SIG	26	NC		
454	136-27A	H:IN PHASE	27	L:H SHIFT INH	136-27B	387
		NC	28	H:COMB FIL ON	136-28B	456
462	138-08A	PB FP-2 OUT	29	PB FP-1 OUT	138-08B	463
		NC	30	NC		
374	136-31A	REF 1ST FIELD	31	NC		
283	130-35B, 136-32A, 272-001, 269-010	SERIAL CLK IN	32	SERIAL READY OUT	130-36B, 136-32B, 269-012, 272-004	284
285	130-37B, 136-33A, 269-011, 272-003	SERIAL RX OUT	33	SERIAL TX IN	130-38B, 136-33B, 269-009, 272-002	286
287	130-39B	SERIAL CS MDM IN	34	SERIAL CS TBC IN	136-34B	457
369	136-35A, 134-11B	VD OUT	35	HD OUT	136-35B	458
390	134-23A	CHARA GATE IN	36	CHARA SIG IN	134-23B	391
464	138-09A	PB Y SYNC	37	INPUT SYNC	135-12A	430
517	269-003	KEY OUT (-)	38	KEY TEST	105-001, 269-005	518
262	117-24B, 136-34A, 130-40B, 269-006, 272-006	L:SYSTEM RESET IN	39	KEY IN-1	269-004	519
207	121-21A	C-A REC EN A/V	40	Y-A REC EN A/V	121-19A	205
208	121-21B	C-B REC EN A/V	41	Y-B REC EN A/V	121-19B	206
-5V		REG -5V	42	REG -5V		-5V
		REG -5V	43	REG -5V		
8V		REG +8V	44	REG +8V		8V
		REG +8V	45	REG +8V		
5V		REG +5V	46	REG +5V		5V
		REG +5V	47	REG +5V		
		GND	48	GND		
		GND	49	GND		
-3		GND	50	GND		-3

SS-48DP

CN140

		A		B		
		NC	1	NC		
		NC	2	KEY IN-2 (-)	105-010	521
522	103-005	PRIORITY OUT	3	PRIORITY IN	104-005	523
		NC	4	NC		
		NC	5	NC		
164	118-21B	H:AFM MUTE	6	SYNCHRONIZE	102-029	528
245	117-16A	SV A4	7	NC		
247	117-17A	SV A6	8	SV A5	117-16B	246
249	117-18A	SV A8	9	SV A7	117-17B	248
251	117-19A	SV A10	10	SV A9	117-18B	250
264	117-26A	DT RAM CS	11	DT RAM WAIT	117-25B	263
265	117-26B	CKR IN	12	VITC VD	117-30A	272
		NC	13	DT RG SW PLS	117-28A	268
271	117-29B	DT C SW PLS	14	DT Y SW PLS	117-29A	270
267	117-27B	CAPSTAN 2FG B	15	CAPSTAN 2FG A	117-27A	266
		NC	16	1/2 VD	130-06B	273
☆	290-003	L:CASSETTE IN STATUS OUT	17	L:NORMAL PLAY STATUS OUT	290-002	☆
		NC	18	L:STB ON STATUS IN	290-001	☆
		NC	19	NC		
		NC	20	NC		
276	130-16B	INPUT SEL 3	21	NC		
		NC	22	NC		
		NC	23	NC		
394	134-25A	AV SERIAL CONT SYTX	24	AV SERIAL CONT SYRX	134-25B	395
529	269-008	CS TOP 3	25	CS TOP 2	269-007	530
		NC	26	TC DATA	138-09B	465
438	135-28A	H:VITC GATE IN	27	VITC IN	135-30A	439
		NC	28	L:SYNC DELAY	137-20A	459
296	132-24A	H:FAST SEARCH	29	NC		
		NC	30	L:DT HEAD SEL IN	118-25B, 130-04B, 262-064	168
		NC	31	H:REF OSC ON	132-27B, 138-27B	301
		NC	32	NC		
		NC	33	NC		
		NC	34	NC		
		NC	35	NC		
		NC	36	NC		
137	115-18A	L:REC INH	37	NC		
		NC	38	NC		
533	210-006	XLR T/C IN (Y)	39	XLR T/C IN (X)	210-005	534
		NC	40	XLR T/C IN (G)	210-004	535
		NC	41	NC		
		NC	42	L:TBC REF SEL	136-06B	445
		NC	43	NC		
		NC	44	KEY OUT-2 (-)	105-002	537
		NC	45	NC		
		NC	46	NC		
		NC	47	NC		
		NC	48	NC		
		NC	49	NC		
304	138-29B, 132-29B	L:PB NO SIG	50	LEVEL REF ON	138-10B	466

A B C D E F G H

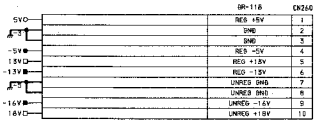

		BR-118	CN260
5V		REG +5V	1
		GND	2
		GND	3
-5V		REG -5V	4
18V		REG +18V	5
-13V		REG -13V	6
		UNREG GND	7
		UNREG GND	8
-16V		UNREG -16V	9
18V		UNREG +18V	10

		BR-118	CN262
117-15B, 141-09B		5V A3	1
117-15A, 141-09A		5V A2	2
117-14B, 141-09A		5V A1	3
117-14A, 141-10B		5V A0	4
141-10A		BR CS	5
117-24A, 141-11B		5V RR	6
117-23B, 141-11A		5V WR	7
141-12B		I/O RESET	8
117-19B, 141-12A		5V B0	9
117-20A, 141-13B		5V B1	10
117-20B, 141-13A		5V B2	11
117-21A, 141-14B		5V B3	12
117-21B, 141-14A		5V B4	13
117-22A, 141-15B		5V B5	14
117-22B, 141-15A		5V B6	15
117-23A, 141-16B		5V B7	16
141-16A		EEPROM SCK	17
141-17B		EEPROM SO	18
141-17A		EEPROM SI	19
141-18B		EEPROM BUSY	20
141-18A		EEPROM CS0	21
141-19B		EEPROM CS1	22
141-19A		EEPROM CS2	23
141-20B		TAPE END	24
141-20A		TAPE BEGIN	25
141-21B		S REEL CURRENT	26
141-21A		T-REEL CURRENT	27
141-22B		CAP CURRENT	28
141-22A		DRUM CURRENT	29
141-23B		LOADING CURRENT	30
141-23A		CC UP/DOWN CURRENT	31
141-24B		POSITION CURRENT	32
141-24A		TENSION CURRENT	33
141-25B		CTL S16	34
141-25A		CAP FG A ANALOG	35
141-26B		CAP FG B ANALOG	36
141-26A		S-TENSION	37
141-27B		T-TENSION	38
141-27A		LOADING DRIVE	39
141-28B		S-REEL DRIVE	40
141-28A		T-REEL DRIVE	41
141-29B		CAPSTAN DRIVE	42
141-25A		DRUM DRIVE	43
141-30B		TENSION SENSOR V_{CC}	44
141-30A		LOADING FG	45
117-11B, 141-31B		DRUM FG	46
141-31A		DRUM PG	47
141-32B		S-REEL FG 1	48
141-32A		S-REEL FG 2	49
141-33B		T-REEL FG 1	50
141-33A		T-REEL FG 2	51
141-34B		CAP FG A	52
141-34A		CAP FG B	53
141-35B		CAP FG A NORM	54
141-35A		CAP FG B NORM	55
141-36B, 117-26B		SWITCHER CTL	56
141-36A		PWM FOR 12V	57
130-34B, 118-20B, 114-22B, 150-03B, 141-37B, 138-24B, 155-23A, 250-08A, 121-20B		L/METAL/H2OXIDE OUT	58
141-37A		CTL REC	59
141-38B		1/2 VD FOR BR	60
141-38A		BA LATCH	61
		+8V	62
141-39A		FULL ERASE ON	65
118-25B, 150-04B, 140-30B		L-DT HEAD SEL OUT	64

SS-48DP

		CN141			
		A		B	
		GND	1	GND	
		GND	2	GND	
		GND	3	GND	
18V		REG +13V	4	REG +13V	13V
-15V		REG -15V	5	REG -15V	-15V
		NC	6	NC	
119-39B	L/R ERASE CH-B ON OUT	7	L/R ERASE CH-A ON OUT	119-30A	
113-28B, 115-28B	L/AU RESET	8	5V A3	117-15B, 262-001	
117-14B, 262-005	5V A1	9	5V A2	117-15A, 262-002	
262-005	BR CS	10	5V A1	117-14A, 262-004	
117-23B, 262-007	5V WR	11	5V R0	117-24A, 262-006	
117-19B, 262-009	5V B0	12	I/O RESET	262-008	
117-20B, 262-011	5V B2	13	5V B1	117-20A, 262-010	
117-21B, 262-013	5V B4	14	5V B3	117-21A, 262-012	
117-22B, 262-015	5V B6	15	5V B5	117-22A, 262-014	
262-017	EEPROM SCK	16	3V B7	117-23A, 262-016	
262-019	EEPROM SI	17	EEPROM SO	262-018	
262-021	EEPROM CS 0	18	EEPROM BUSY	262-020	
262-022	EEPROM CS 2	19	EEPROM CS 1	262-022	
262-025	TAPE BEGIN	20	TAPE END	262-024	
262-027	T-REEL CURRENT	21	S-REEL CURRENT	262-026	
262-029	DRUM CURRENT	22	CAPSTAN CURRENT	262-028	
262-251	CC UP/DOWN CURRENT	23	LOADING CURRE	262-030	
262-032	TENSION CURRENT OUT	24	POSITION CURRENT	262-052	
262-035	CAP FG A ANALOG	25	CTL S16	262-034	
262-037	S-TENSION	26	CAP FG B ANALOG	262-036	
262-039	LOADING DRIVE	27	T-TENSION	262-038	
262-041	T-REEL DRIVE	28	S-REEL DRIVE	262-040	
262-043	DRUM DRIVE	29	CAPSTAN DRIVE	262-042	
262-045	LOADING FG	30	TENSION SENSOR V_{CC}	262-044	
262-047	DRUM PG	31	DRUM FG	262-046, 117-11B	
262-049	S-REEL FG 2	32	S-REEL FG 1	262-048	
262-051	T-REEL FG 2	33	T-REEL FG 1	262-050	
262-053	CAP FG B	34	CAP FG A	262-052	
262-055	CAP FG B NORM	35	CAP FG A NORM	262-054	
262-057	PWM FOR 12V	36	SWITCHED CTL	262-056, 117-28B	
262-059	CTL REC	37	L/METAL/H2OXIDE IN	118-20B, 114-22B, 250-08A, 262-058, 138-09B, 121-20B, 130-34B, 155-23A, 120-04B	
262-061	BA LATCH	38	1/2 VD/MOTOR BR	262-060	
262-063	H/FULL ERASE ON	39	L/REC CONT	118-19B, 121-20A	
240-002, C101-02, R101-01	FAN MOTOR CHECK OUT	40	REC TEMP	804-007	
118-23A, 132-09A, 136-11A	C SW PLS IN	41	F SW PLS IN	118-24B, 132-36A, 138-36A, 269-015	
118-22B, 132-08A, 136-10A	L/C 80 PLS OUT	42	L/Y 80 PLS OUT	132-33A, 150-33A	
132-31B, 158-31B	5V TAPE SPEED	43	REF SYNC	136-14B	
132-25B	LOW B10	44	SERVO Y	136-37B	
136-39A	H/FWD/REV	45	L/FWD/REV X13	136-38B	
136-39B, 118-18A	H/SV LOCK	46	L/NOISELESS FB	136-39B	
136-40A	H/CHROMA MUTE	47	NC		
118-18B, 135-21A, 130-17B, 250-08B	H/VIDEO REC/SE MODE	48	H/VIDEO CC DEMODE OUT	132-24B, 138-24B	
274-006	TRACKING CONT Vcc1	49	CS (OP 1	272-005	
274-006	TRACKING CONT 02	50	TRACKING CONT 00	274-007	

MB-394 BOARD (4/8)

1-640-877-11
BVW-D75PS ; # 10001-

NOTE : -< XXX mark means the connection data in this board. Same numbers are connected with printed foiled pattern.

MB-394 BOARD (5/8)

MB-394 BOARD (5/8)
Mother Board

AU-145

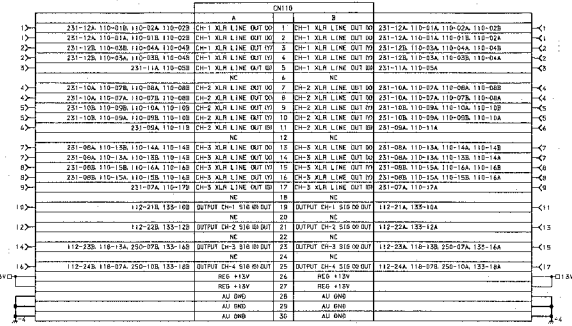

AU-145

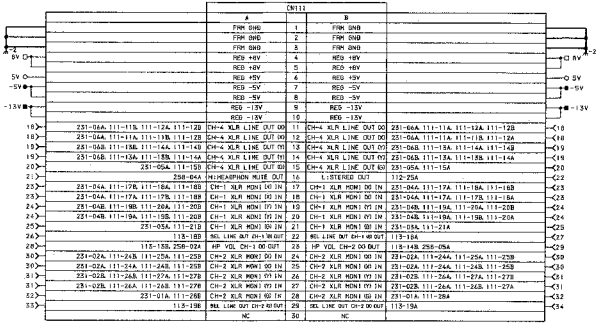

AU-146P

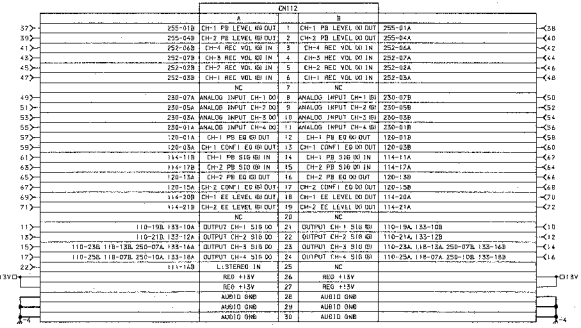

AU-146P

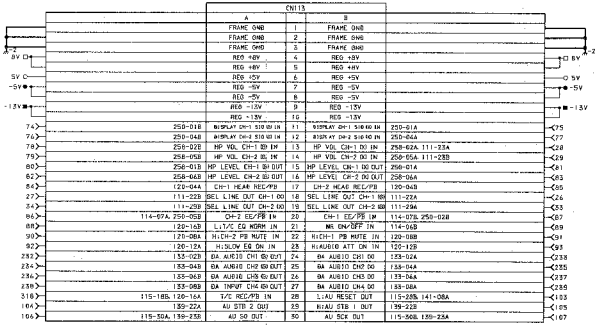

14-151

MB-394 BOARD (5/8)

AU-145

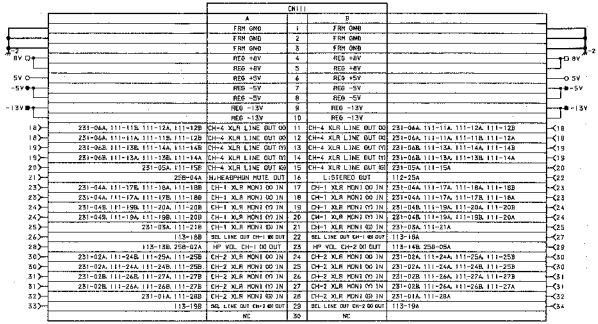

AU-146P

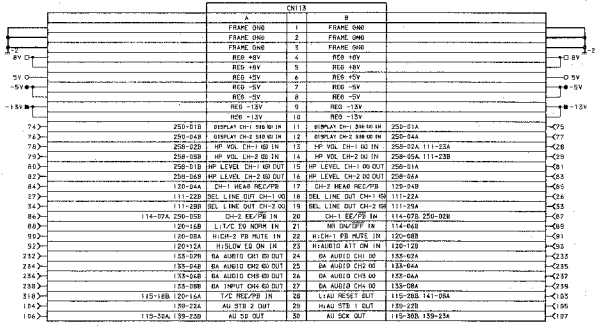

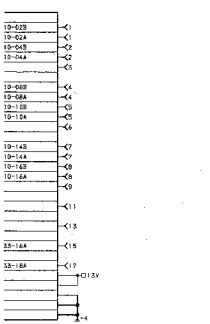

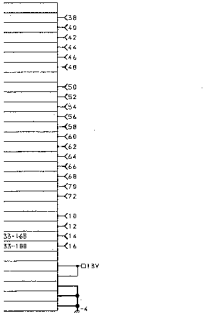

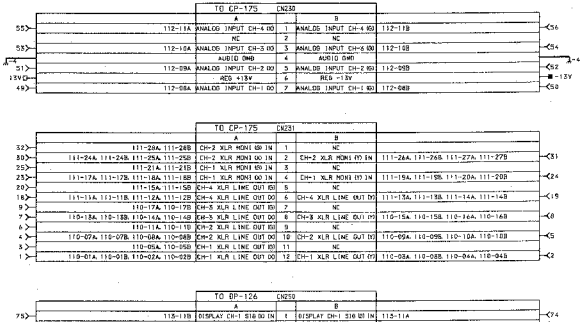

MB-394 BOARD (5/8)

1-640-677-11
BVW-D75PS ; #10001-

NOTE : —< XXX mark means the connection data in this board. Same numbers are connected with printed foiled pattern.

14-151

MB-394 BOARD (6/8)

MB-394 BOARD (6/8)

Mother Board

AU-147P

CN114

		A		B		
108	255-02A	CH-1 PB VOL 00 IN	1	CH-1 PB VOL 00 IN	255-02B	109
110	255-03A	CH-2 PB VOL 00 IN	2	CH-2 PB VOL 00 IN	255-03B	111
112	252-04A	CH-1 REC LEVEL 00 OUT	3	CH-1 REC LEVEL 00 OUT	252-04A	113
114	252-01A	CH-2 REC LEVEL 00 OUT	4	CH-2 REC LEVEL 00 OUT	252-01A	115
		NC	5	NC		
		NC	6	NR ON/ OFF OUT	113-21B	89
86	113-20A, 250-05B	CH-2 EE/ PB OUT	7	CH-1 EE/ PB OUT	113-20B, 250-02B	87
		NC	8	NC		
		NC	9	NC		
		NC	10	NC		
62	112-14B	CH-1 PB SIG 00 OUT	11	CH-1 PB SIG 60 OUT	112-14A	61
116	120-05A	CH-1 CROSSTALK 60 IN	12	CH-1 CROSSTALK 00 IN	120-05B	117
118	120-07A	CH-1 REC SIG 60 IN	13	CH-1 REC SIG 00 IN	120-07B	119
		NC	14	NC		
120	120-09A	CH-2 REC SIG 60 IN	15	CH-2 REC SIG 00 IN	120-09B	121
122	120-11A	CH-2 CROSSTALK 60 IN	16	CH-2 CROSSTALK 00 IN	120-11B	123
64	112-15B	CH-2 PB SIG 00 OUT	17	CH-2 PB SIG 60 OUT	112-15A	65
		NC	18	NC		
		NC	19	NC		
70	112-18B	CH-1 EE LEVEL 00 IN	20	CH-1 EE LEVEL 60 IN	112-18A	69
72	112-19B	CH-2 EE LEVEL 00 IN	21	CH-2 EE LEVEL 60 IN	112-19A	71
		NC	22	L:METAL/HIOXIDE OUT	118-20B, 250-08A, 263-05B, 130-05B, 131-20B, 141-37B, 138-34B, 135-20A , 120-06B	124
		NC	23	NC		
125	126-18A	T/C CURRENT 60 OUT	24	T/C CURRENT 00 OUT	126-18B	126
127	126-19A	T/C VOLTAGE 60 OUT	25	T/C VOLTAGE 00 OUT	126-19B	128
13V		REG +13V	26	REG +13V		13V
		REG +13V	27	REG +13V		
		AUDIO GND	28	AUDIO GND		
		AUDIO GND	29	AUDIO GND		
		AUDIO GND	30	AUDIO GND		4

AU-147P

CN115

		A		B	
		FRAME GND	1	FRAME GND	
		FRAME GND	2	FRAME GND	
2		FRAME GND	3	FRAME GND	
8V		REG +8V	4	REG +8V	
		REG +8V	5	REG +8V	
5V		REG +5V	6	REG +5V	
-5V		REG -5V	7	REG -5V	
		REG -5V	8	REG -5V	
-13V		REG -13V	9	REG -13V	
		REG -13V	10	REG -13V	
129	120-20A, 120-20B, 115-11B	CH-2 BIAS Vee	11	CH-2 BIAS Vee	120-20A, 120-20B, 115-11A
130	120-21A, 120-21B, 115-12B	CH-2 BIAS Vcc	12	CH-2 BIAS Vcc	120-21A, 120-21B, 115-12A
131	120-22B	CH-2 BIAS CLOCK 00	13	CH-2 BIAS CLOCK 00	120-22A
132	120-23A, 120-23B, 115-14B	CH-1 BIAS Vee	14	CH-1 BIAS Vee	120-23A, 120-23B, 115-14A
134	120-24A, 120-24B, 115-15B	CH-1 BIAS Vcc	15	CH-1 BIAS Vcc	120-24A, 120-24B, 115-15A
135	120-25B	CH-1 BIAS CLOCK 00	16	CH-1 BIAS CLOCK 00	120-25A
		NC	17	NC	
137	140-37A	L:REC INH	18	T/C REC/PB OUT	113-28A, 120-16A
138	285-006, 115-19B	CH-1 ERASE HEAD 60	19	CH-1 ERASE HEAD 00	285-006, 115-19A
139	285-005, 115-20B	CH-1 ERASE HEAD 60	20	CH-1 ERASE HEAD 00	285-005, 115-20A
140	285-004, 115-21B	CH-1 ERASE HEAD 60	21	CH-1 ERASE HEAD 00	285-004, 115-21A
141	285-003, 115-22B	CH-2 ERASE HEAD 60	22	CH-2 ERASE HEAD 00	285-003, 115-22A
142	285-002, 115-23B	CH-2 ERASE HEAD 60	23	CH-2 ERASE HEAD 00	285-002, 115-23A
143	285-001, 115-24B	CH-2 ERASE HEAD 60	24	CH-2 ERASE HEAD 00	285-001, 115-24A
144	285-009, 115-25B	T/C ERASE HEAD 60	25	T/C ERASE HEAD 00	285-009, 115-25A
145	285-008, 115-26B	T/C ERASE HEAD 60	26	T/C ERASE HEAD 00	285-008, 115-26A
146	285-007, 115-27B	T/C ERASE HEAD 60	27	T/C ERASE HEAD 00	285-007, 115-27A
147	159-21A	H:AU STB 0 OUT	28	L:AU RESET OUT	113-28B, 141-08A
		NC	29	NC	
106	113-30A, 139-23B	AU SO OUT	30	AU SCK OUT	113-30B, 139-23A

DT-28

CN116

		A		B	
		NC	1	NC	
		NC	2	NC	
		NC	3	NC	
		NC	4	NC	
		NC	5	NC	
		NC	6	NC	
		NC	7	NC	
		NC	8	NC	
		NC	9	NC	
213	138-20A	DT Y IN	10	NC	
101	138-19A	L:DT IN	11	L:DT X3 IN	138-18B	214
215	138-19B	PB FIELD O/E IN	12	FRAME STILL)	138-20B	216
217	138-22B	Y W2	13	C W2	138-22A	218
		NC	14	NC		
		NC	15	NC		
176	119-15B	Y-A SYNC REF 60 OUT	16	Y-A SYNC REF 00 OUT	119-15A	175
182	119-19B	Y-B SYNC REF 00 OUT	17	Y-B SYNC REF 60 OUT	119-19A	181
221	132-30A, 138-30A	L:C PCM MUTE	18	L:C PCM MUTE	132-30B, 138-30B	222
223	132-35B	Y RF ENV IN	19	NC		
		NC	20	NC		
224	287-001	SG A (+) OUT	21	SG A (-) OUT	287-002	225
226	287-003	SG B (+) OUT	22	SG B (-) OUT	287-004	227
228	287-005	BIM DRIVE A IN	23	BIM DRIVE B IN	287-006	229
230	287-007	BIM DRIVE SIG A	24	BIM DRIVE SIG B	287-008	231
		NC	25	NC		
13V		REG +13V	26	REG +13V		13V
		REG +13V	27	REG +13V		
		AUDIO GND	28	AUDIO GND		
		AUDIO GND	29	AUDIO GND		
		AUDIO GND	30	AUDIO GND		4

DT-28

CN117

		A		B	
		FRAME GND	1	FRAME GND	
		FRAME GND	2	FRAME GND	
2		FRAME GND	3	FRAME GND	
8V		REG +8V	4	REG +8V	
		REG +8V	5	REG +8V	
5V		REG +5V	6	REG +5V	
-5V		REG -5V	7	REG -5V	
		REG -5V	8	REG -5V	
-13V		REG -13V	9	REG -13V	
		REG -13V	10	REG -13V	
		NC	11	DRUM FG	141-51B, 262-04B
		NC	12	NC	
		NC	13	L:Y 60 PLS OUT	132-33A, 138-33A, 141-42B
241	141-10B, 262-004	SV A0	14	SV A0	141-09A, 262-005
243	141-09B, 262-002	SV A2	15	SV A3	141-08B, 262-001
245	140-07A	SV A4	16	SV A5	140-08B
247	140-08A	SV A6	17	SV ?	140-09B
249	140-09A	SV A8	18	SV A9	140-10B
251	140-10A	SV A10	19	SV 00	141-12A, 262-009
253	141-13B, 262-010	SV 01	20	SV 02	141-13A, 262-011
255	141-14B, 262-012	SV 03	21	SV 04	141-14A, 262-013
257	141-15B, 262-014	SV 05	22	SV 06	141-15A, 262-015
259	141-16B, 262-016	SV 07	23	SV WR	141-11A, 262-007
261	141-11B, 262-006	SV RR	24	L:SYSTEM RESET OUT	136-40B, 139-39A, 136-34A,
		NC	25	DT RAM WAIT	140-11B
264	140-11A	DT RAM CS	26	CKR OUT	140-12A
266	140-15B	CAPSTAN ZFG A	27	CAPSTAN ZFG B	140-15A
268	140-13B	DT PG SW PLS	28	SWITCHED CTL	262-05A, 141-36B
270	140-14B	DT Y SW PLS	29	DT C SW PLS	140-14A
272	140-26A	VITC VB	30	NC	

14-153

A B C D E F G H

MB-394 BOARD (6/8)

AU-147P

CN115

	A		B	
	FRAME GND	1	FRAME GND	
	FRAME GND	2	FRAME GND	
	FRAME GND	3	FRAME GND	
	REG +8V	4	REG +8V	
	REG +8V	5	REG +8V	
	REG +5V	6	REG +5V	
	REG -5V	7	REG -5V	
	REG -5V	8	REG -5V	
	REG -13V	9	REG -13V	
	REG -13V	10	REG -13V	
120-20A, 120-20B, 115-11B	CH-2 BIAS Vee	11	CH-2 BIAS Vcc	120-20A, 120-20B, 115-11A
120-21A, 120-21B, 115-12B	CH-2 BIAS Vcc	12	CH-2 BIAS Vee	120-21A, 120-21B, 115-12A
120-22B	CH-2 BIAS CLOCK (Y)	13	CH-2 BIAS CLOCK (Y)	120-22A
120-23A, 120-23B, 115-14B	CH-1 BIAS Vee	14	CH-1 BIAS Vee	120-23A, 120-23B, 115-14A
120-24A, 120-24B, 115-15B	CH-1 BIAS Vcc	15	CH-1 BIAS Vcc	120-24A, 120-24B, 115-15A
120-25B	CH-1 BIAS CLOCK (X)	16	CH-1 BIAS CLOCK (Y)	120-25A
NC		17	NC	
140-57A	L:REC INH	18	T/C REC/PB OUT	113-28A, 120-16A
285-004, 115-19B	CH-1 ERASE HEAD (X)	19	CH-1 ERASE HEAD (X)	285-004, 115-19A
285-005, 115-20B	CH-1 ERASE HEAD (Y)	20	CH-1 ERASE HEAD (Y)	285-005, 115-20A
285-004, 115-21B	CH-1 ERASE HEAD (X)	21	CH-1 ERASE HEAD (X)	285-004, 115-21A
285-003, 115-22B	CH-2 ERASE HEAD (X)	22	CH-2 ERASE HEAD (X)	285-003, 115-22A
285-002, 115-23B	CH-2 ERASE HEAD (Y)	23	CH-2 ERASE HEAD (Y)	285-002, 115-23A
285-001, 115-24B	CH-2 ERASE HEAD (X)	24	CH-2 ERASE HEAD (X)	285-001, 115-24A
285-009, 115-25B	T/C ERASE HEAD (X)	25	T/C ERASE HEAD (X)	285-009, 115-25A
285-008, 115-26B	T/C ERASE HEAD (Y)	26	T/C ERASE HEAD (Y)	285-008, 115-26A
285-007, 115-27B	T/C ERASE HEAD (X)	27	T/C ERASE HEAD (X)	285-007, 115-27A
139-21A	H:AU STB 0 OUT	28	L:AU RESET OUT	113-28?, 141-68A
NC		29	NC	
113-30A, 139-23B	AU SG OUT	30	AU SCK OUT	113-30B, 135-25A

AM-34 ICH ERG — CN285

115-24A, 115-24B	CH-2 ERASE HEAD (X) IN	1
115-23A, 115-23B	CH-2 ERASE HEAD (Y) IN	2
115-22A, 115-22B	CH-2 ERASE HEAD (X) IN	3
115-21A, 115-21B	CH-1 ERASE HEAD (X) IN	4
115-20A, 115-20B	CH-1 ERASE HEAD (Y) IN	5
115-19A, 115-19B	CH-1 ERASE HEAD (X) IN	6
115-27A, 115-27B	T/C ERASE HEAD (X) IN	7
115-26A, 115-26B	T/C ERASE HEAD (Y) IN	8
115-25A, 115-25B	T/C ERASE HEAD (X) IN	9

BT-29 — CN287

116-21A	SG A (+) OUT	1
116-21B	SG A (-) OUT	2
116-22A	SG B (+) OUT	3
116-22B	SG B (-) OUT	4
116-23A	BIM DRIVE A IN	5
116-22B	BIM DRIVE B IN	6
116-24A	BIM DRIVE SIG A	7
116-24B	BIM DRIVE SIG B	8
303-001	REG +13V	9
303-002	REG -13V	10
002-004	GND	11

DT-28

CN117

	A		B	
	FRAME GND	1	FRAME GND	
	FRAME GND	2	FRAME GND	
	FRAME GND	3	FRAME GND	
	REG +8V	4	REG +8V	
	REG +8V	5	REG +8V	
	REG +5V	6	REG +5V	
	REG -5V	7	REG -5V	
	REG -5V	8	REG -5V	
	REG -13V	9	REG -13V	
	REG -13V	10	REG -13V	
	NC	11	DRUM FG	141-31B, 262-04A
	NC	12	NC	
	NC	13	L:Y BG PLS OUT	132-35A, 136-33A, 141-42B
141-10B, 262-00A	5V A0	14	5V A1	141-09A, 262-00B
141-09B, 262-002	5V A2	15	5V A3	141-08B, 262-001
140-07A	5V A4	16	5V A5	140-08B
140-06A	5V A6	17	5V 7	140-09B
140-09A	5V A8	18	5V A9	140-10B
140-10A	5V A10	19	5V B0	141-12A, 262-009
141-13B, 262-010	5V B1	20	5V B2	141-13A, 262-011
141-14B, 262-012	5V B3	21	5V B4	141-14A, 262-013
141-15B, 262-014	5V B5	22	5V B6	141-15A, 262-015
141-16B, 262-016	5V B7	23	5V WR	141-11A, 262-007
141-11B, 262-006	5V R0	24	L:SYSTEM RESET OUT	130-40B, 139-39A, 156-34A, 270-00A, 272-00A
	NC	25	BT RAM WAIT	140-11B
140-11A	BT RAM CS	26	CKR OUT	140-12A
140-15B	CAPSTAN 2FG A	27	CAPSTAN 2FG B	140-15A
140-18B	BT PG SW PLS	28	SWITCHED CTL	262-05A, 141-36B
140-14B	BT Y SW PLS	29	BT C SW PLS	140-14A
140-26A	VITC WB	30	NC	

MB-394 BOARD (6/8)

1-640-677-11
BVW-D75PS ; # 10001-

NOTE : -< XXX mark means the connection data in this board. Same numbers are connected with printed foiled pattern.

14-153

MB-394 BOARD (7/8)

MB-394 BOARD (7/8)
Mother Board

AFM-8

CN118

			A		B		
148		252-05B	CH-4 REC LEVEL 00 OUT	1	CH-4 REC LEVEL 00 OUT	252-05A	149
			NC	2	NC		
150		252-08B	CH-3 REC LEVEL 00 OUT	3	CH-3 REC LEVEL 00 OUT	252-08A	151
			NC	4	NC		
152		255-07B	CH-4 PB VOL 00 IN	5	CH-4 PB VOL 00 IN	255-07A	153
			NC	6	NC		
16		250-10B 112-24B 110-25A 138-18B	OUTPUT CH-4 SIG 00	7	OUTPUT CH-4 SIG 00	250-10A 112-24A 110-25B 138-18A	17
			NC	8	NC		
154		255-08B	CH-4 PB LEVEL 00 OUT	9	CH-4 PB LEVEL 00 OUT	255-08A	155
			NC	10	NC		
156		255-06B	CH-3 PB VOL 00 IN	11	CH-3 PB VOL 00 IN	255-06A	157
			NC	12	NC		
14		250-07B 110-23A 112-23B 138-16B	OUTPUT CH-3 SIG 00 IN	13	OUTPUT CH-3 SIG 00 IN	250-07A 110-23B 112-23A 138-16A	15
			NC	14	NC		
158		255-05B	CH-3 PB LEVEL 00 OUT	15	CH-3 PB LEVEL 00 OUT	255-05A	159
			NC	16	NC		
160		121-24A	AFM REC RF 00 IN	17	AFM REC RF 00 IN	121-24B	161
470		141-46A 138-39A	H:SV LOCK	18	H:VIDEO REC/EE MODE OUT	141-46A 250-08B 135-21A 138-17B	162
			NC	19	L:REC CONT	121-20A 141-39B	163
			NC	20	L:METAL/H:OXIDE OUT	110-27A 250-49A 262-09A 130-05A 121-26A 141-37A	124
			NC	21	H:AFM MUTE	140-06A	164
			NC	22	L:IC 00 PLS OUT	132-08A 141-42A 138-10A	165
			NC	23	C 5V PLS OUT	132-09A 141-41A 138-11A	166
			NC	24	Y 5V PLS OUT	132-36A 141-41B 138-3AA 269-01B	167
			NC	25	L:EE HEAD SEL OUT	130-04B 140-50B 262-06A	168
13V			REG +13V	26	REG +13V		13V
			REG +13V	27	REG +13V		
			AUDIO GND	28	AUDIO GND		
			AUDIO GND	29	AUDIO GND		
			AUDIO GND	30	AUDIO GND		

AFM-8

CN119

			A		B		
A-2			FRAME GND	1	FRAME GND		
			FRAME GND	2	FRAME GND		
8V			FRAME GND	3	FRAME GND		
			REG +8V	4	REG +8V		
			REG +8V	5	REG +8V		
5V			REG +5V	6	REG +5V		
-5V			REG -5V	7	REG -5V		
			REG -5V	8	REG -5V		
-13V			REG -13V	9	REG -13V		
			REG -13V	10	REG -13V		
			NC	11	NC		
169		300-06Z	Y PB RF 00 IN	12	Y PB RF 00 IN	300-001	
171		121-12A	Y-A RP RF 00 OUT	13	Y-A RP RF 00 OUT	121-12B	
173		288-06Z	Y-A BT RF 00 OUT	14	Y-A BT RF 00 OUT	288-001	
175		116-16B	Y-A SYNC REF 00 IN	15	Y-A SYNC REF 00 IN	116-16A	
			NC	16	NC		
177		121-14A	Y-B RP RF 00 OUT	17	Y-B RP RF 00 OUT	121-14B	
179		288-06S	Y-B BT RF 00 OUT	18	Y-B BT RF 00 OUT	288-004	
181		116-17B	Y-B SYNC REF 00 IN	19	Y-B SYNC REF 00 IN	116-17A	
			NC	20	NC		
183		300-09A	C PB RF 00 IN	21	C PB RF 00 IN	300-005	
185		121-28A	C-A RP RF 00 OUT	22	C-A RP RF 00 OUT	121-28B	
187		288-08B	C-A BT RF 00 OUT	23	C-A BT RF 00 OUT	288-007	
189		121-36A	C-B RP RF 00 OUT	24	C-B RP RF 00 OUT	121-30B	
191		288-011	C-B BT RF 00 OUT	25	C-B BT RF 00 OUT	288-010	
			NC	26	NC		
193		286-09A	CH-B RE HEAD 00 IN	27	CH-B RE HEAD 00 IN	286-005	
195		286-06A	CH-A RE HEAD 00 IN	28	CH-B RE HEAD 00 IN	286-006	
197		286-08A	CH-A RE HEAD 00 IN	29	CH-A RE HEAD 00 IN	286-002	
199		141-07B	L:M ERASE CH-A ON OUT	30	L:M ERASE CH-B ON OUT	141-07A	

RP-53P

CN120

			A		B		
57		112-12A	CH-1 PB EQ 00 IN	1	CH-1 PB EQ 00 IN	112-12B	58
64			NC	2	NC		
59		112-13A	CH-1 CONFI EQ 00	3	CH-1 CONFI EQ 00	112-13B	60
64		113-17A	CH-1 HEAD REC/PB	4	CH-2 HEAD REC/PB	113-17B	65
116		114-12A	CH-1 CROSS TALK 00 OUT	5	CH-1 CROSS TALK 00 OUT	114-12B	117
			NC	6	L:METAL/H:OXIDE OUT	110-20B 114-22B 262-09B 130-05B 121-20A 141-37B 138-34B 135-20A 250-08A	124
118		114-13A	CH-1 REC SIG 00 OUT	7	CH-1 REC SIG 00 OUT	114-13B	119
90		113-22A	H:CH-2 PB MUTE	8	H:CH-1 PB MUTE	113-22B	91
120		114-15A	CH-2 REC SIG 00	9	CH-2 REC SIG 00	114-15B	121
			NC	10	NC		
122		114-16A	CH-2 CROSS TALK 00 OUT	11	CH-2 CROSS TALK 00	114-16B	123
92		113-23A	H:SLOW EQ ON OUT	12	H:AUDIO ATT ON OUT	113-23B	93
65		112-16A	CH-2 PB EQ 00 IN	13	CH-2 PB EQ 00 IN	112-16B	66
			NC	14	NC		
67		112-17A	CH-2 CONFI EQ 00 OUT	15	CH-2 CONFI EQ 00 OUT	112-17B	68
318		113-28A 115-18B	T/C REC/PB	16	L:T/C EQ NORM	113-21A	08
412		139-21B	PB T/C 00 IN	17	REC T/C SIG 00 OUT	139-20A	516
125		114-24A	T/C CURRENT 00 IN	18	T/C CURRENT 00 IN	114-24B	126
127		114-25A	T/C VOLTAGE 00 IN	19	T/C VOLTAGE 00 IN	114-25B	128
129		115-11A 115-11B 120-20B	CH-2 BIAS Vee	20	CH-2 BIAS Vee	115-11A 115-11B 120-20A	129
130		115-12A 115-12B 120-21B	CH-2 BIAS Vcc	21	CH-2 BIAS Vcc	115-12A 115-12B 120-21A	130
132		115-15B	CH-2 BIAS CLOCK 00	22	CH-2 BIAS CLOCK 00	115-13A	131
133		115-14A 115-14B 120-23B	CH-1 BIAS Vee	23	CH-1 BIAS Vee	115-14A 115-14B 120-25A	133
134		115-15A 115-15B 120-24B	CH-1 BIAS Vcc	24	CH-1 BIAS Vcc	115-15A 115-15B 120-24A	134
136		115-16B	CH-1 BIAS CLOCK 00 OUT	25	CH-1 BIAS CLOCK 00 OUT	115-16A	135
13V			REG +13V	26	REG +13V		15V
			REG +13V	27	REG +13V		
			AUDIO GND	28	AUDIO GND		
			AUDIO GND	29	AUDIO GND		
			AUDIO GND	30	AUDIO GND		

RP-53P

CN121

			A		B		
A-2			FRAME GND	1	FRAME GND		
			FRAME GND	2	FRAME GND		
AV			FRAME GND	3	FRAME GND		
			REG +8V	4	REG +8V		
			REG +8V	5	REG +8V		
5V			REG +5V	6	REG +5V		
-5V			REG -5V	7	REG -5V		
			REG -5V	8	REG -5V		
-13V			REG -13V	9	REG -13V		
			REG -13V	10	REG -13V		
			NC	11	NC		
171		119-13A	Y-A RP RF 00 IN	12	Y-A RP RF 00 IN	119-13B	
			NC	13	NC		
177		119-17A	Y-B RP RF 00 IN	14	Y-B RP RF 00 IN	119-17B	
			NC	15	NC		
201		130-27B	Y REC RF 00 OUT	16	Y REC RF 00 OUT	130-26B	
			NC	17	NC		
203		139-11B	Y-A REC I CONT OUT	18	Y-B REC I CONT OUT	139-12B	
205		139-40B	Y-A REC EN A/V OUT	19	Y-B REC EN A/V OUT	139-41B	
165		118-19B 141-39B	L:REC CONT OUT	20	L:METAL/H:OXIDE OUT	110-20B 114-22B 130-05B 141	
207		139-40A	C-A REC EN A/V OUT	21	C-B REC EN A/V OUT	139-41A	
209		130-09B	C-A REC I CONT OUT	22	C-B REC I CONT OUT	139-10B	
			NC	23	NC		
140		118-17A	AFM REC RF 00 OUT	24	AFM REC RF 00 OUT	118-17B	
			NC	25	NC		
211		130-20B	C REC RF 00 OUT	26	C REC RF 00 OUT	130-19B	
			NC	27	NC		
185		119-22A	C-A RP RF 00 IN	28	C-A RP RF 00 IN	119-22B	
			NC	29	NC		
189		119-24A	C-B RP RF 00 IN	30	C-B RP RF 00 IN	119-24B	

14-155

MB-394 BOARD (7/8)

AFM-8

CN115

		A		B		
		FRAME GND	1	FRAME GND		
		FRAME GND	2	FRAME GND		
		FRAME GND	3	FRAME GND		
		REG +8V	4	REG +8V		
		REG +8V	5	REG +8V		
		REG +5V	6	REG +5V		
		REG -5V	7	REG -5V		
		REG -5V	8	REG -5V		
		REG -13V	9	REG -13V		
		REG -13V	10	REG -13V		
		NC	11	NC		
169	300-002	Y PB RF 00 IN	12	Y PB RF 00 IN	300-001	170
171	121-12A	Y-A RP RF 03 OUT	13	Y-A RP RF 00 OUT	121-12B	172
173	288-002	Y-A BT RF 03 OUT	14	Y-A BT RF 00 OUT	288-001	174
175	116-16B	Y-A SYNC REF 03 IN	15	Y-A SYNC REF 00 IN	116-16A	176
		NC	16	NC		
177	121-14A	Y-B RP RF 03 OUT	17	Y-B RP RF 00 OUT	121-14B	178
179	288-005	Y-B BT RF 03 OUT	18	Y-B BT RF 00 OUT	288-004	180
181	116-17B	Y-B SYNC REF 03 IN	19	Y-B SYNC REF 00 IN	116-17A	182
		NC	20	NC		
183	300-004	C PB RF 03 IN	21	C PB RF 00 IN	300-005	184
185	121-28A	C-A RP RF 03 OUT	22	C-A RP RF 00 OUT	121-28B	186
187	288-008	C-A BT RF 03 OUT	23	C-A BT RF 00 OUT	288-007	188
189	121-30A	C-B RP RF 03 OUT	24	C-B RP RF 00 OUT	121-30B	190
191	288-011	C-B BT RF 03 OUT	25	C-B BT RF 00 OUT	288-010	192
		NC	26	NC		
193	286-004	CH-B RE HEAD 00 IN	27	CH-B RE HEAD 01 IN	286-005	194
195	286-003	CH-A RE HEAD 03 IN	28	CH-B RE HEAD 03 IN	286-006	196
197	286-001	CH-A RE HEAD 02 IN	29	CH-A RE HEAD 01 IN	286-002	198
199	141-07B	L.R ERASE CH-A ON OUT	30	L.R ERASE CH-B ON OUT	141-07A	200

DRUM (RT ERI) CN286

197	119-29A	CH-A RE HEAD 00 IN	1
198	119-29B	CH-A RE HEAD 01 IN	2
195	119-28A	CH-A RE HEAD 02 IN	3
193	119-27A	CH-B RE HEAD 00 IN	4
194	119-27B	CH-B RE HEAD 01 IN	5
196	119-28B	CH-B RE HEAD 02 IN	6

DRUM (DT RF) CN288

174	119-14B	Y-A BT RF 00 OUT	1
173	119-14A	Y-A BT RF 03 OUT	2
	002-004	GND	3
180	119-18B	Y-B BT RF 00 OUT	4
179	119-18A	Y-B BT RF 03 OUT	5
	002-004	GND	6
188	119-23B	C-A BT RF 00 OUT	7
187	119-23A	C-A BT RF 03 OUT	8
	002-004	GND	9
192	119-25B	C-B BT RF 00 OUT	10
191	119-25A	C-B BT RF 03 OUT	11
	002-004	GND	12

TO CN301 CN300

170	119-12B	Y PB RF 00 OUT	1
169	119-12A	Y PB RF 03 OUT	2
		NC	3
183	115-21A	C PB RF 03 OUT	4
184	115-21B	C PB RF 00 OUT	5

RP-53P

CN121

		A		B		
		FRAME GND	1	FRAME GND		
		FRAME GND	2	FRAME GND		
		FRAME GND	3	FRAME GND		
		REG +8V	4	REG +8V		
		REG +8V	5	REG +8V		
		REG +5V	6	REG +5V		
		REG -5V	7	REG -5V		
		REG -5V	8	REG -5V		
		REG -13V	9	REG -13V		
		REG -13V	10	REG -13V		
		NC	11	NC		
171	119-13A	Y-A RP RF 03 IN	12	Y-A RP RF 00 IN	119-13B	172
		NC	13	NC		
177	119-17A	Y-B RP RF 03 IN	14	Y-B RP RF 00 IN	119-17B	178
		NC	15	NC		
201	130-27B	Y REC RF 03 OUT	16	Y REC RF 00 OUT	130-26B	202
		NC	17	NC		
203	130-11B	Y-A REC I CONT OUT	18	Y-B REC I CONT OUT	130-12B	204
205	139-40B	Y-A REC EN A/V OUT	19	Y-B REC EN A/V OUT	139-41B	206
163	119-19B, 141-39B	L:REC CONT OUT	20	L:METAL/M:0X10E OUT	110-20B, 114-22B, 130-05B, 141-37B, 150-34B, 155-20A, 250-08A, 262-05B, 120-06B	124
207	139-40A	C-A REC EN A/V OUT	21	C-B REC EN A/V OUT	139-41A	208
209	130-09B	C-A REC I CONT OUT	22	C-B REC I CONT OUT	130-10B	210
		NC	23	NC		
160	118-17A	AFM REC RF 03 OUT	24	AFM REC RF 00 OUT	118-17B	161
		NC	25	NC		
211	150-20B	C REC RF 03 OUT	26	C REC RF 00 OUT	150-19B	212
		NC	27	NC		
185	119-22A	C-A RP RF 03 IN	28	C-A RP RF 00 IN	119-22B	186
		NC	29	NC		
189	119-24A	C-B RP RF 03 IN	30	C-B RP RF 00 IN	119-24B	190

MB-394 BOARD (7/8)

1-640-677-11
BVW-D75PS : # 10001-

NOTE : –< XXX mark means the connection data in this board. Same numbers are connected with printed foiled pattern.

MB-394 BOARD (8/8)
Mother Board

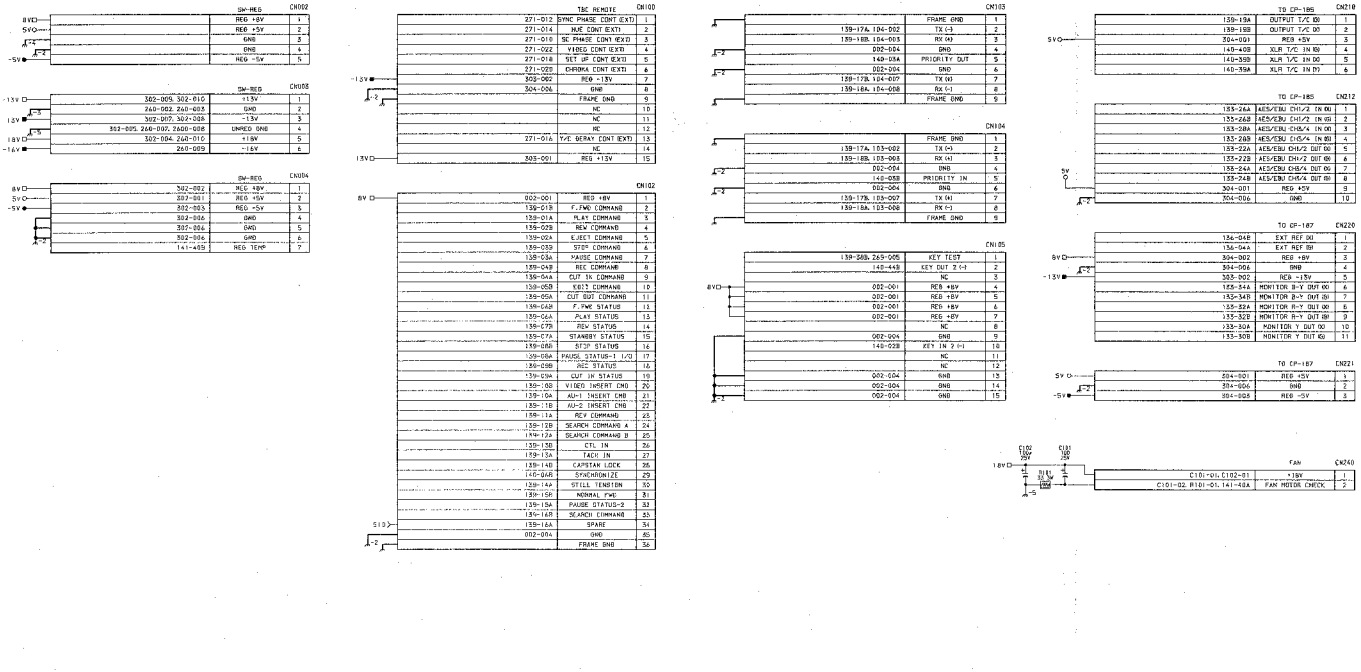

MB-394 BOARD (8/8)

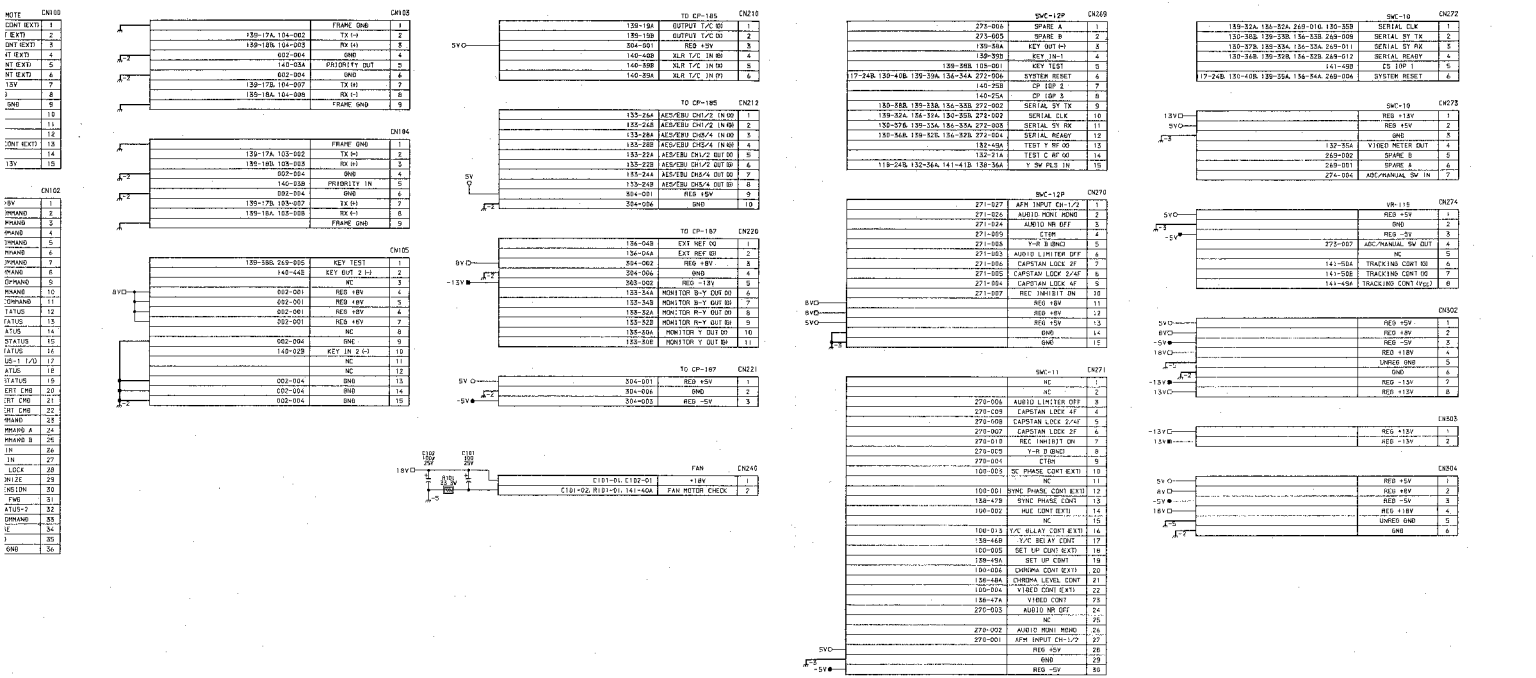

MB-394 BOARD (8/8)

1-640-677-11
BVW-D75PS ; # 10001-

NOTE : -< XXX mark means the connection data in this board. Same numbers are connected with printed foiled pattern.

14-157

MB-394 BOARD (1/5)

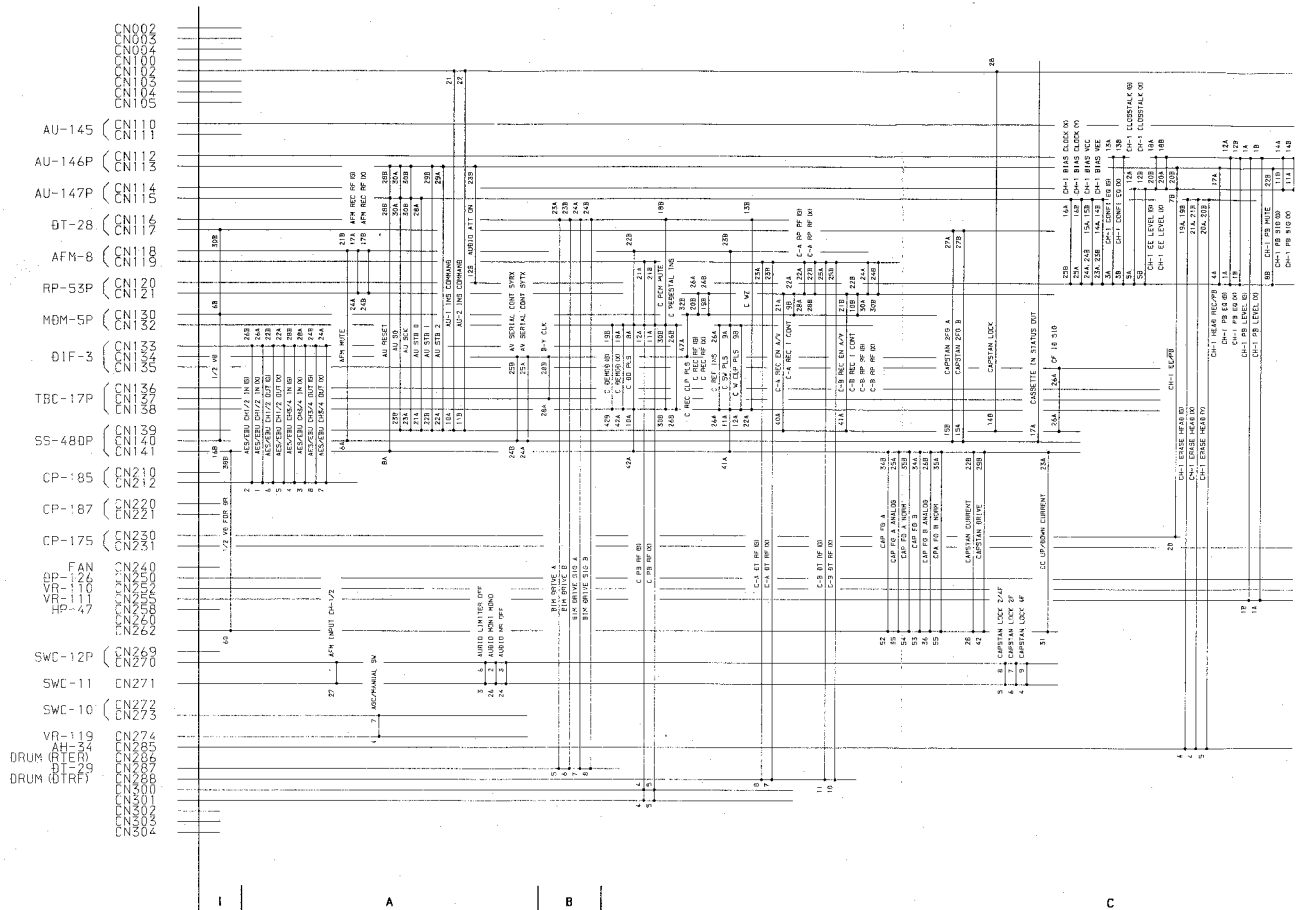

14-159

MB-394 BOARD (1/5)

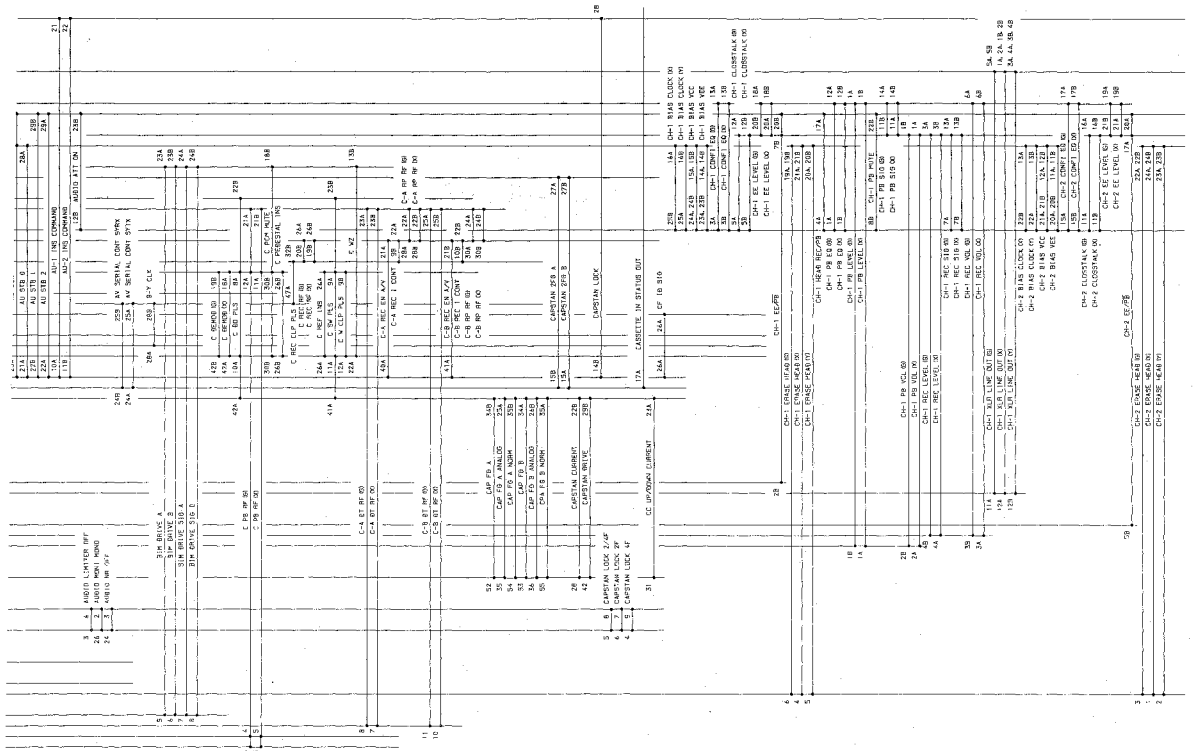

MB-394 BOARD (1/5)

1-640-677-11
BVW-D75PS ; # 10001-

14-159

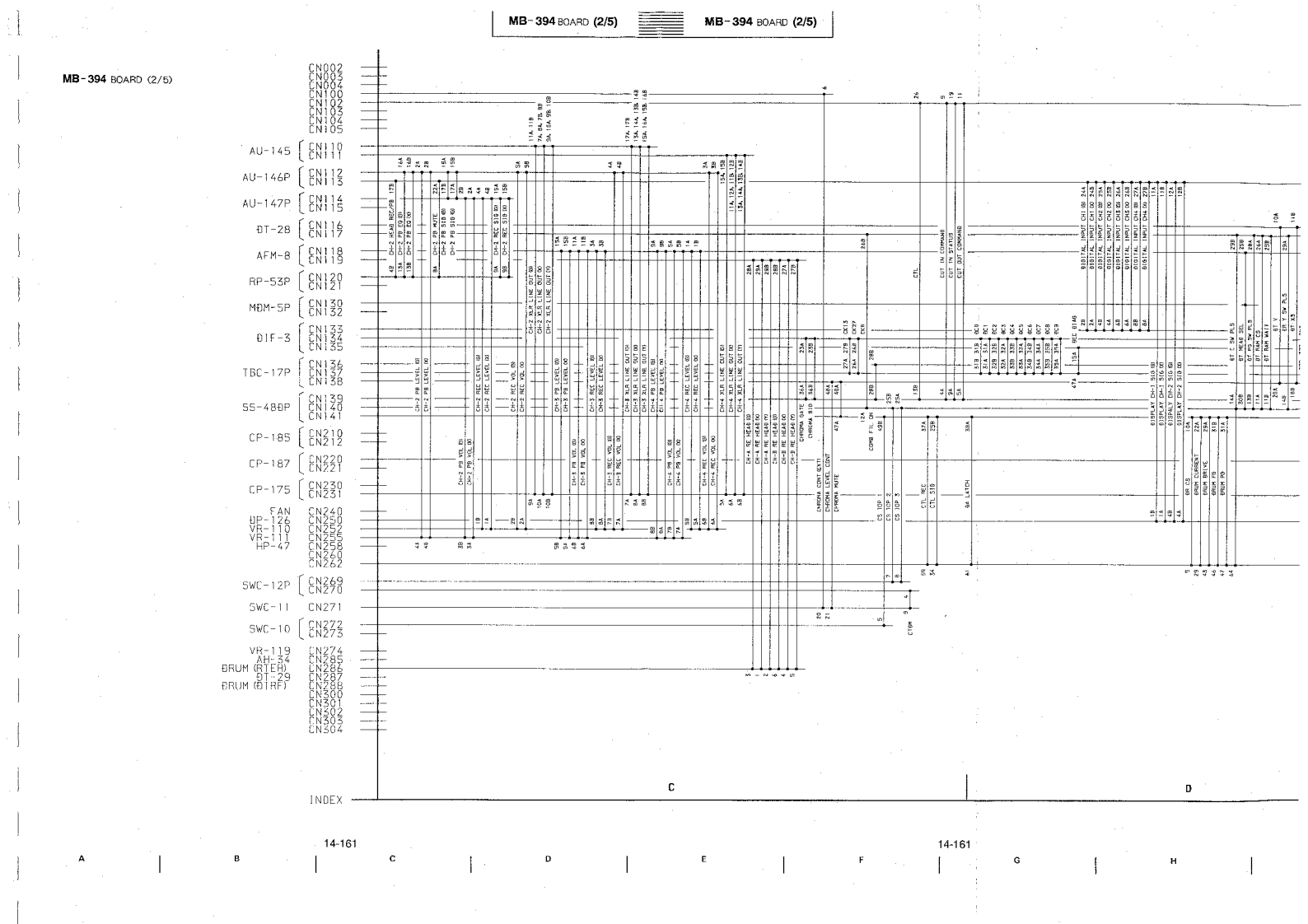
MB-394 BOARD (2/5)
CN002
CN003
CN004
CN100
CN101
CN102
CN103
CN104
CN105
AU-145 CN110 CN111
AU-146P CN112 CN113
AU-147P CN114 CN115
DT-28 CN116 CN117
AFM-8 CN118 CN119
RP-53P CN120 CN121
MDM-5P CN130 CN132
DIF-3 CN133 CN134 CN135
TBC-17P CN136 CN137 CN138
SS-48DP CN139 CN140 CN141
CP-185 CN210 CN212
CP-187 CN220 CN221
CP-175 CN230 CN231
FAN CN240
VP-126 CN250
VR-110 CN252
VR-111 CN255
HP-47 CN258
CN260
CN262
SWC-12P CN269 CN270
SWC-11 CN271
SWC-10 CN272 CN273
VR-119 CN274
AH-34 CN285
BRUM (ATRF) CN286
DT-29 CN287
BRUM (DIRF) CN288
CN300
CN301
CN302
CN303
CN304
INDEX
C
D
14-161
14-161
A
B
C
D
E
F
G
H

MB-394 BOARD (2/5)

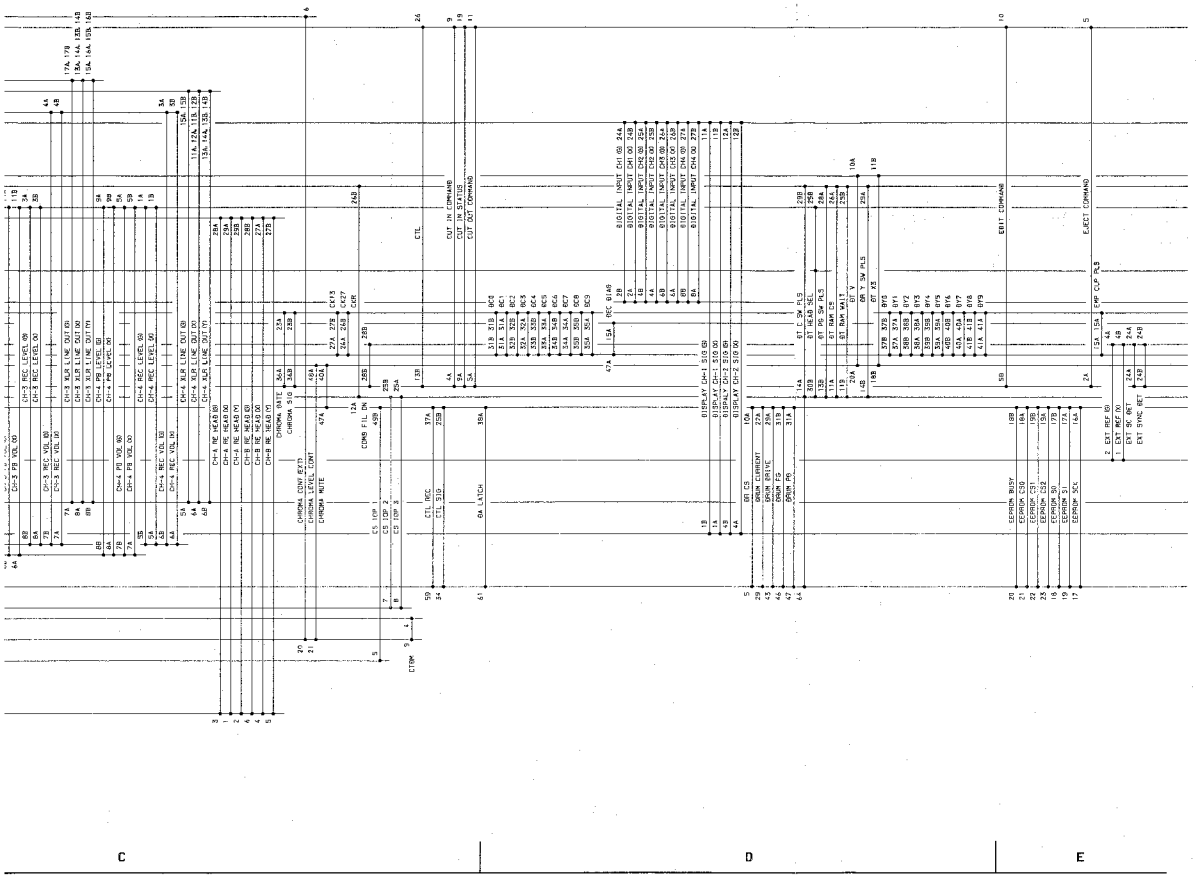

MB-394 BOARD **(2/5)**

1-640-677-11
SVW-D75PS : #10001-

14-161

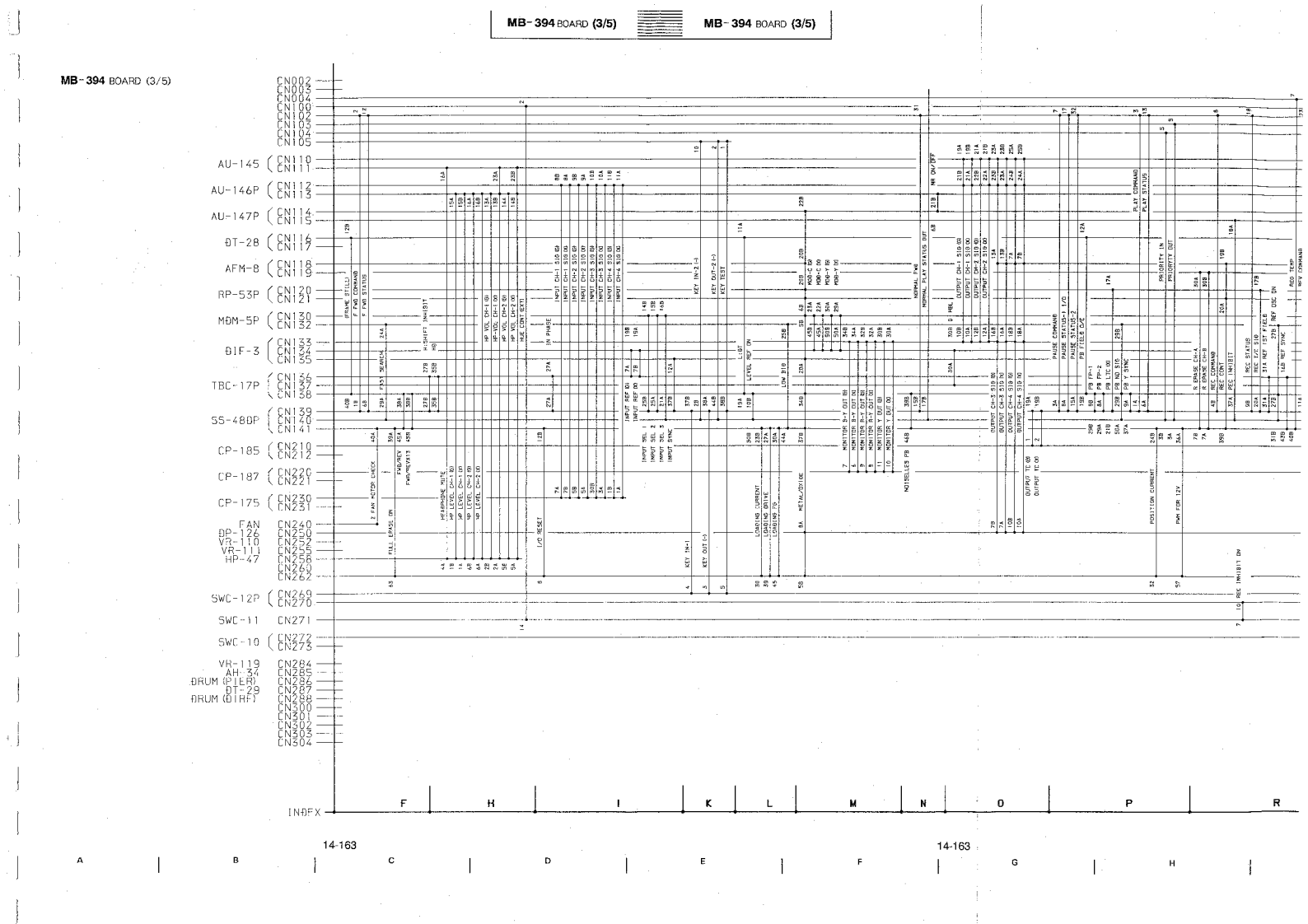
MB-394 BOARD (3/5)
CN002
CN003
CN004
CN100
CN101
CN102
CN103
CN104
CN105
AU-145 (CN110 CN111
AU-146P (CN112 CN113
AU-147P (CN114 CN115
ØT-28 (CN116 CN117
AFM-8 (CN118 CN119
RP-53P (CN120 CN121
MØM-5P (CN130 CN132
ØIF-3 (CN133 CN134 CN135
TBC-17P (CN136 CN137 CN138
SS-48ØP (CN139 CN140 CN141
CP-185 (CN210 CN212
CP-187 (CN220 CN221
CP-175 (CN230 CN231
FAN CN240
ØP-126 CN250
VS-110 CN252
VR-111 CN255
HP-47 CN256
CN260
CN262
SWC-12P (CN269 CN270
SWC-11 CN271
SWC-10 (CN272 CN273
VR-119 CN284
AH-34 CN285
ØRUM (PIER) CN286
ØT-29 CN287
ØRUM (DIRF) CN288
CN300
CN501
CN502
CN503
CN504
INØEX
F
H
I
K
L
M
N
O
P
R
14-163
14-163
A
B
C
D
E
F
G
H

MB-394 BOARD (3/5)

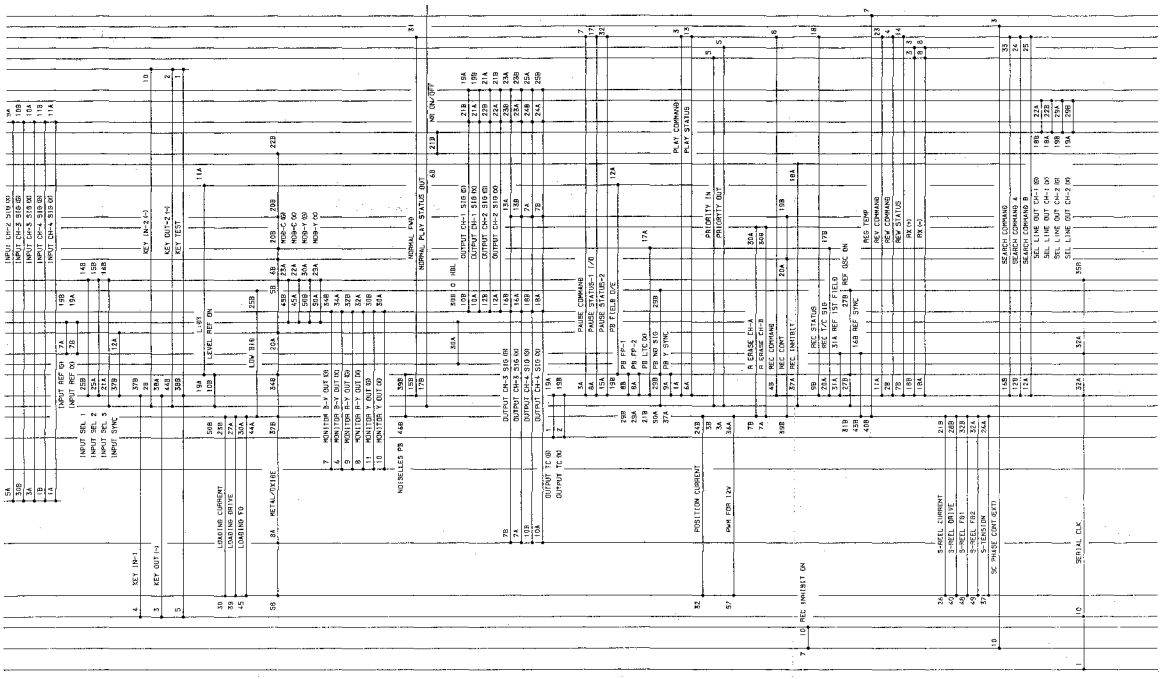

MB-394 BOARD (3/5)

1-640-677-11
SVW-D75PS : # 10001-

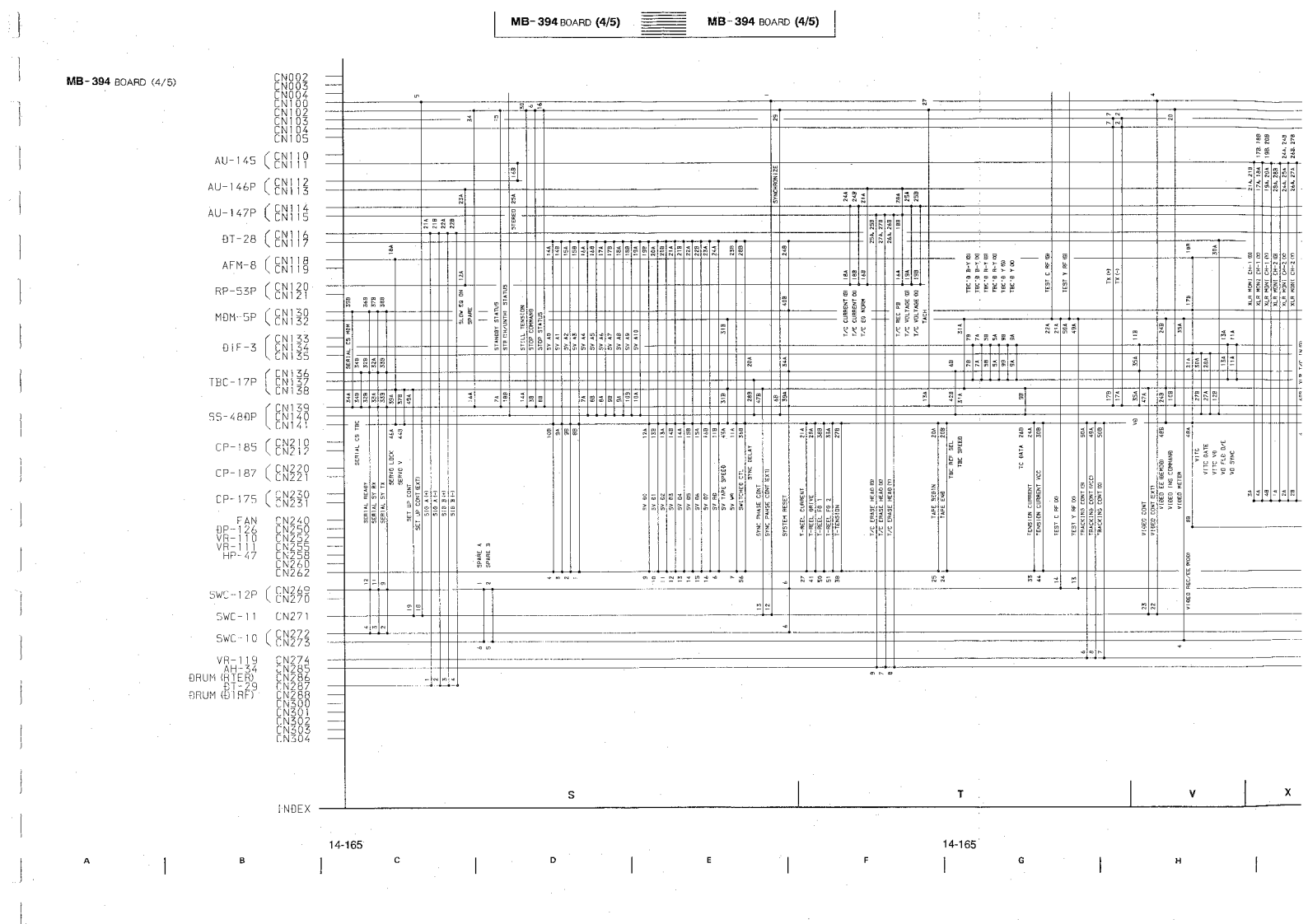
MB-394 BOARD (4/5)
CN002
CN003
CN004
CN100
CN101
CN102
CN103
CN104
CN105
AU-145 (CN110 CN111
AU-146P (CN112 CN113
AU-147P (CN114 CN115
DT-28 (CN116 CN117
AFM-8 (CN118 CN119
RP-53P (CN120 CN121
MDM-5P (CN130 CN132
DIF-3 (CN133 CN134 CN135
TBC-17P (CN136 CN137 CN138
SS-480P (CN139 CN140 CN141
CP-185 (CN210 CN212
CP-187 (CN220 CN221
CP-175 (CN230 CN231
FAN CN240
DP-142 CN250
VR-110 CN252
VR-111 CN255
HP-47 CN256
CN260
CN262
SWC-12P (CN269 CN270
SWC-11 CN271
SWC-10 (CN272 CN273
VR-119 CN274
AH-34 CN285
DRUM (AFTER) CN286
DT-29 CN287
DRUM (DIRF) CN288
CN300
CN301
CN302
CN303
CN304
INDEX
S
T
V
X
14-165
14-165
A
B
C
D
E
F
G
H

MB-394 BOARD (4/5)

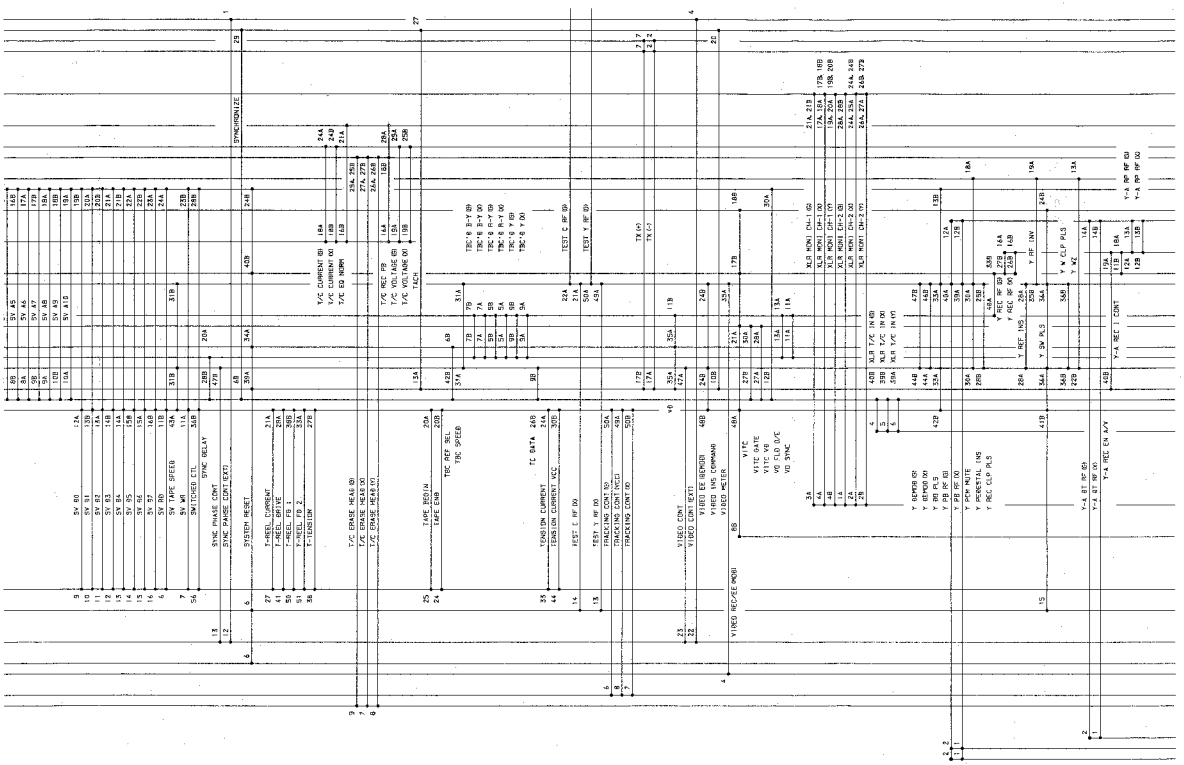

MB-394 BOARD (4/5)

1-840-677-11
BVW-D75PS : # 10001-

14-165

MB-394 BOARD (5/5)

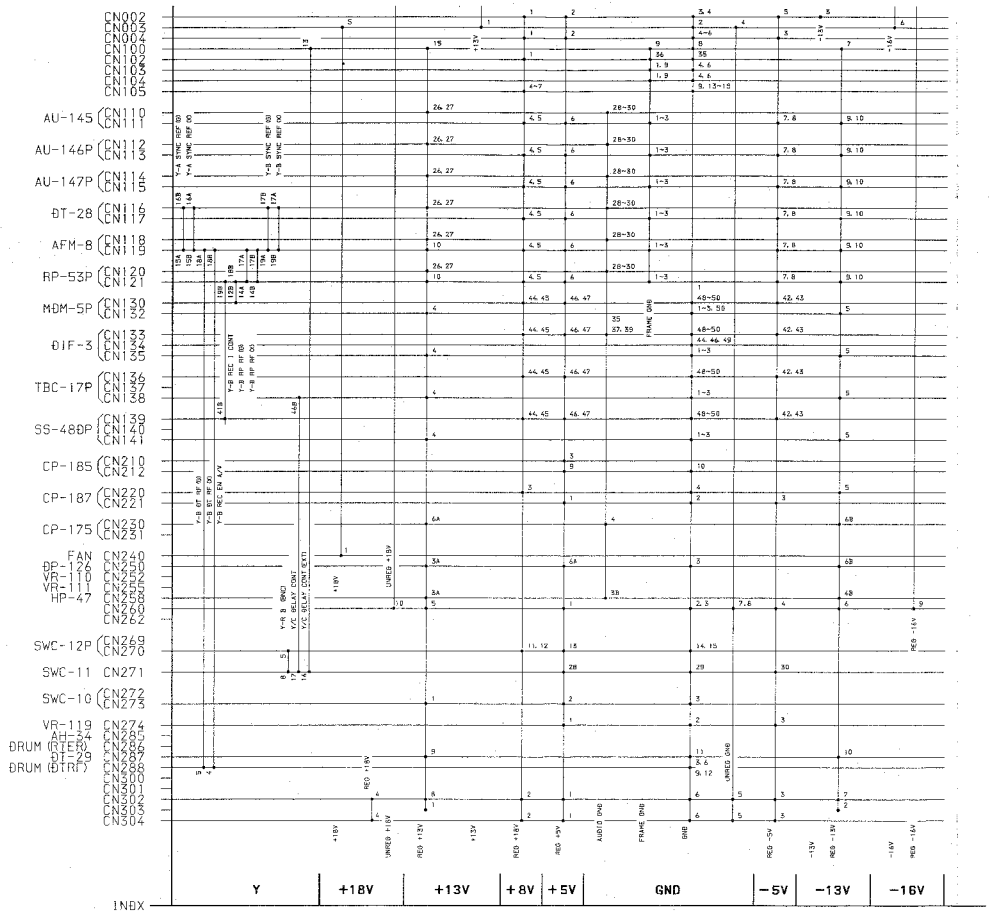

14-167

14-167

MB-394 BOARD (5/5)

1-640-577-11
BVW-D75PS : # 10001-

FRAME A (1/3)

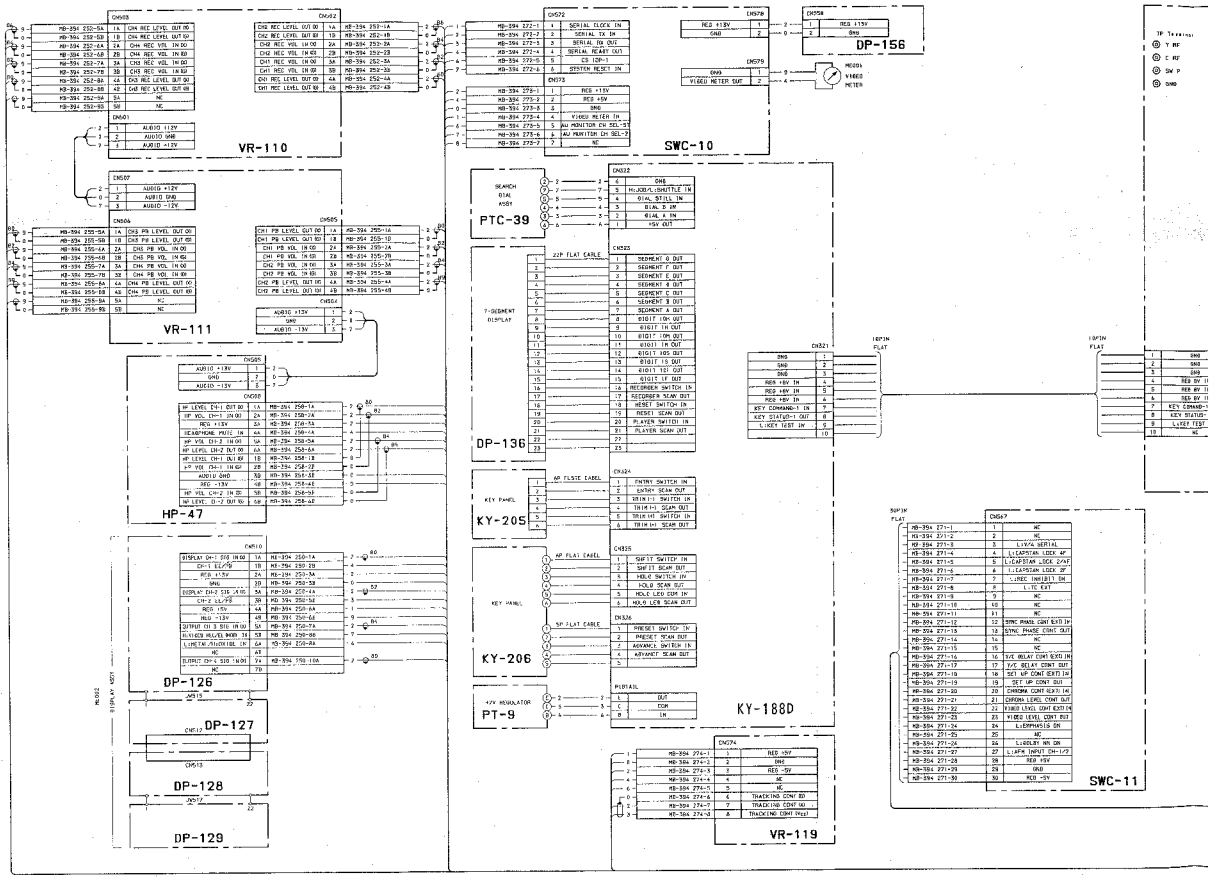

A B C D E F G H

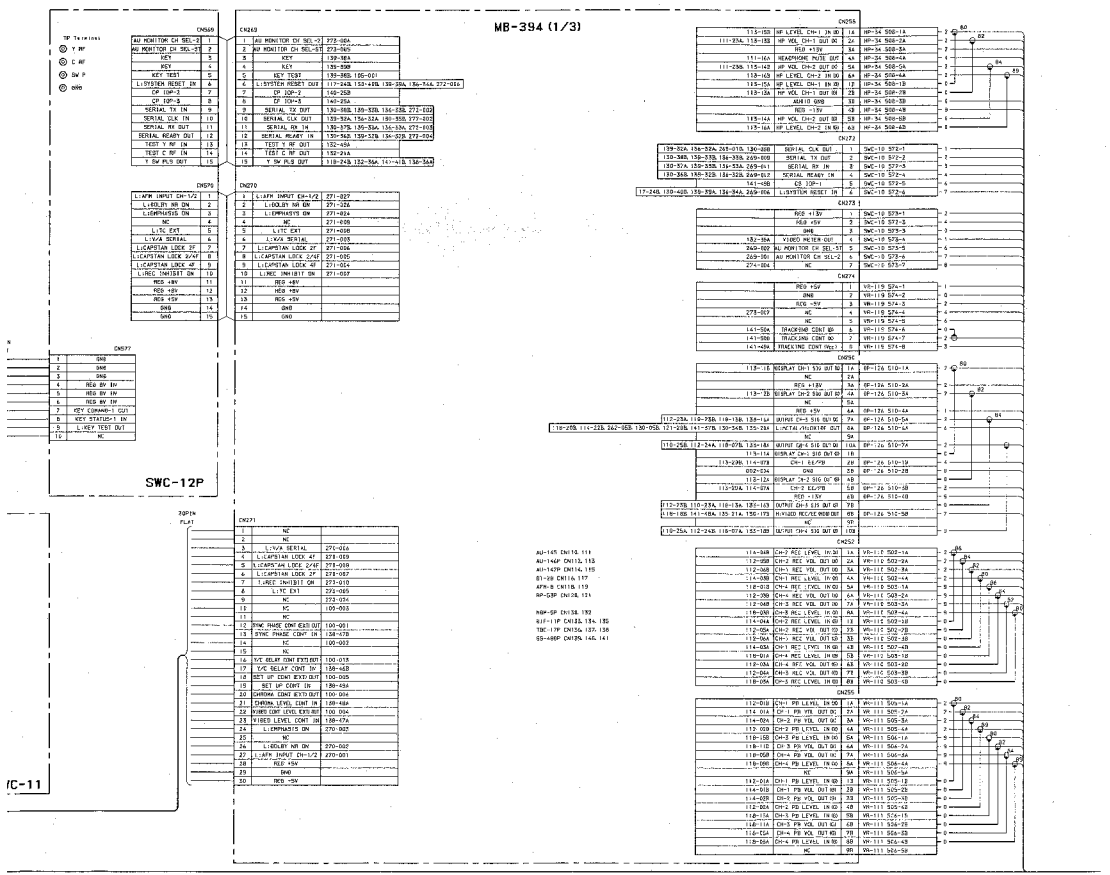

FRAME A (1/3)

BVW-D75PS : # 10001-

FRAME A (2/3)
SR-52
DT-29
UPPER DRUM ASS'Y
DRUM ASS'Y (1/2)
AH-34 (1/2)
AH-35
AH-34 (2/2)
DUS-335
FE-14

14-171

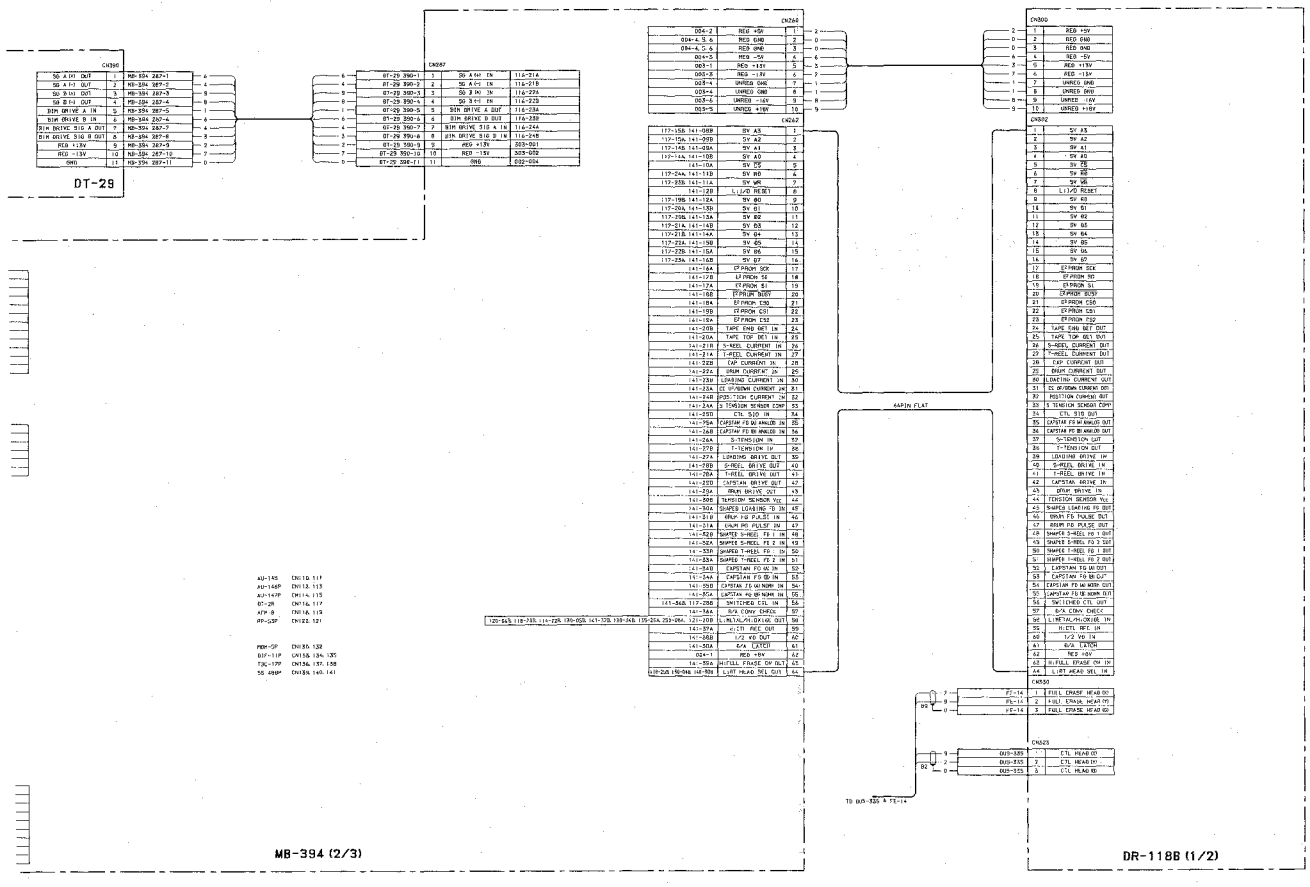

FRAME A (2/3)

BVW-D75PS : #10001-

FRAME A (3/3)

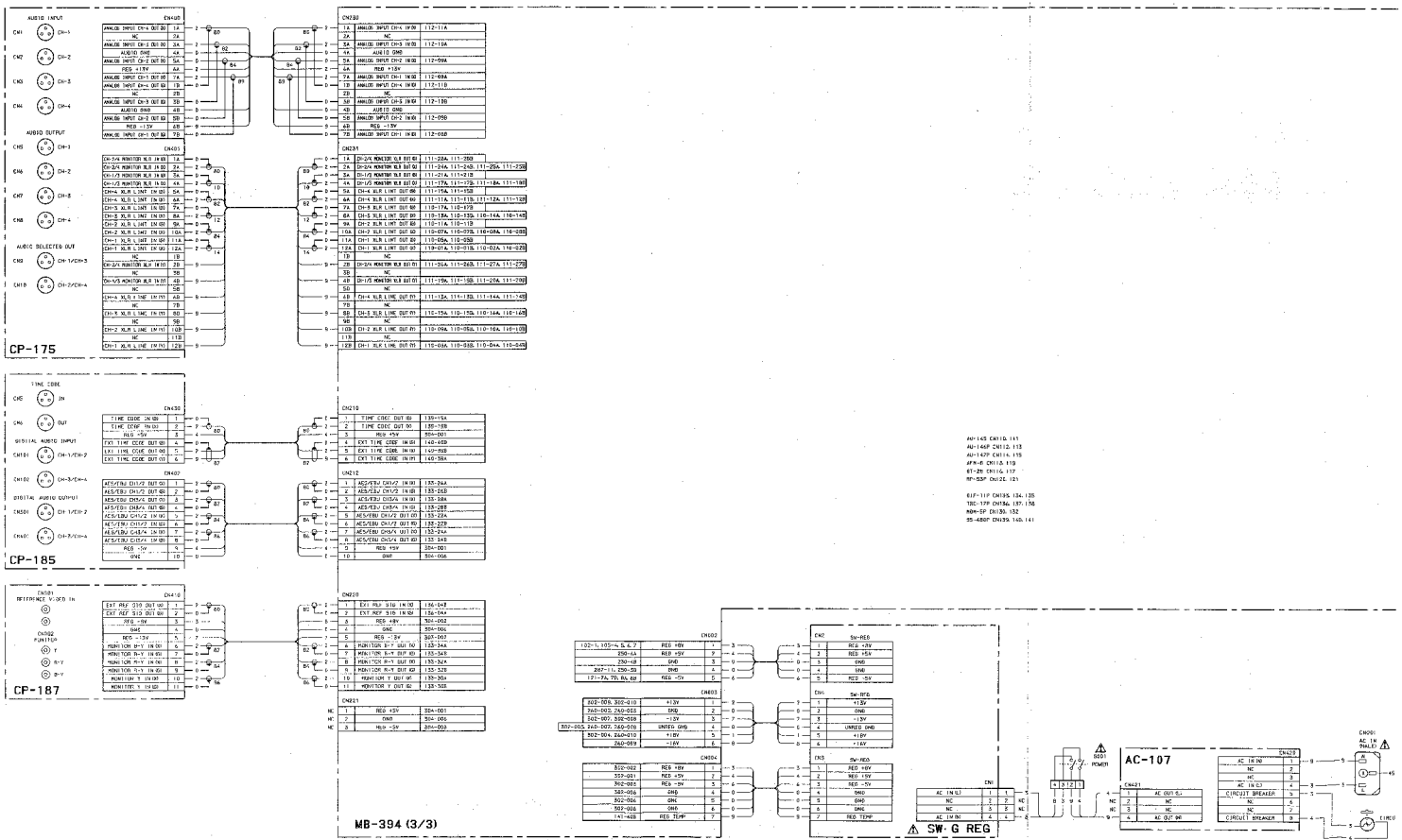

A | B | C | D | E | F | G | H

FRAME A (3/3)

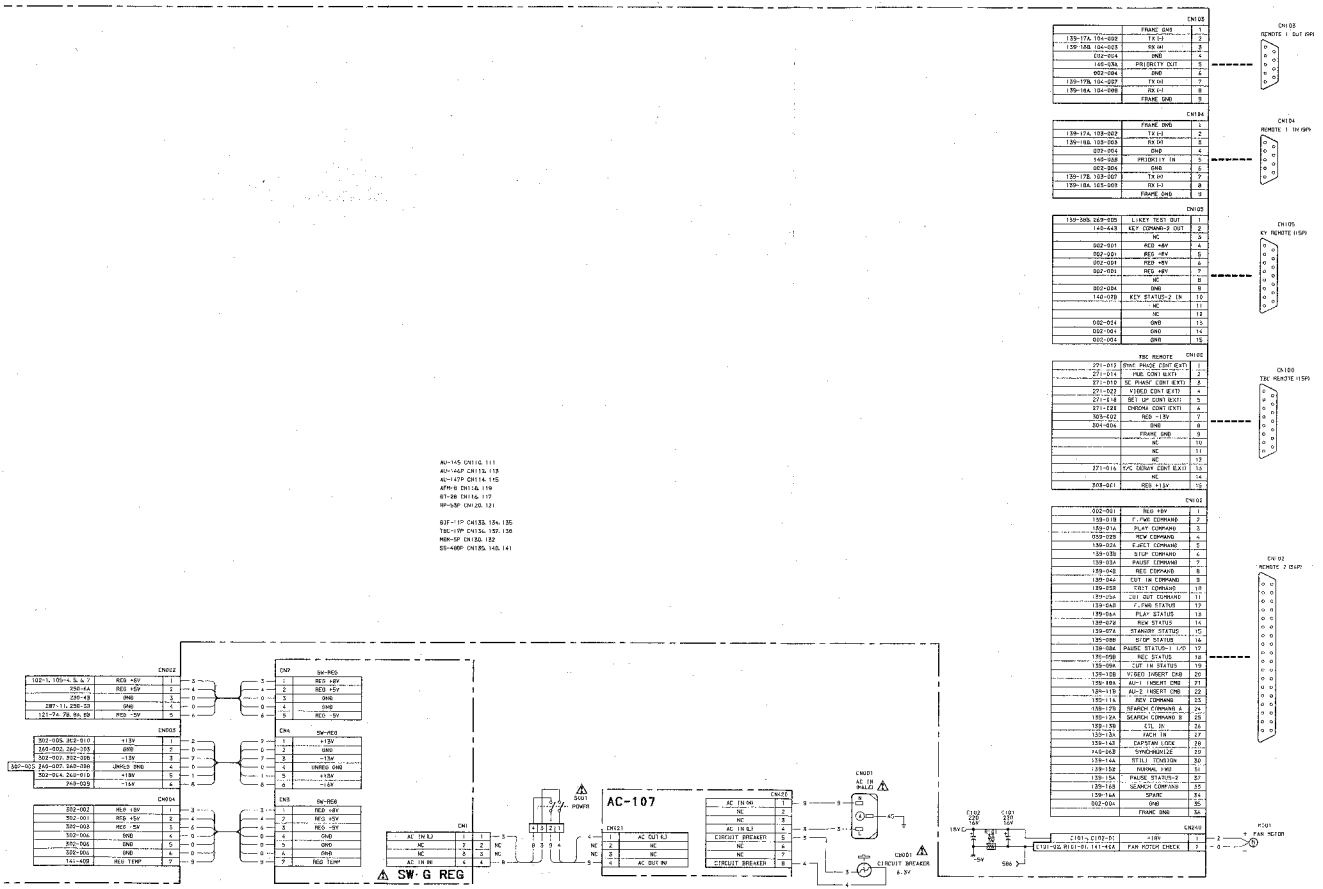

14-173

FRAME A (3/3)

FRAME B

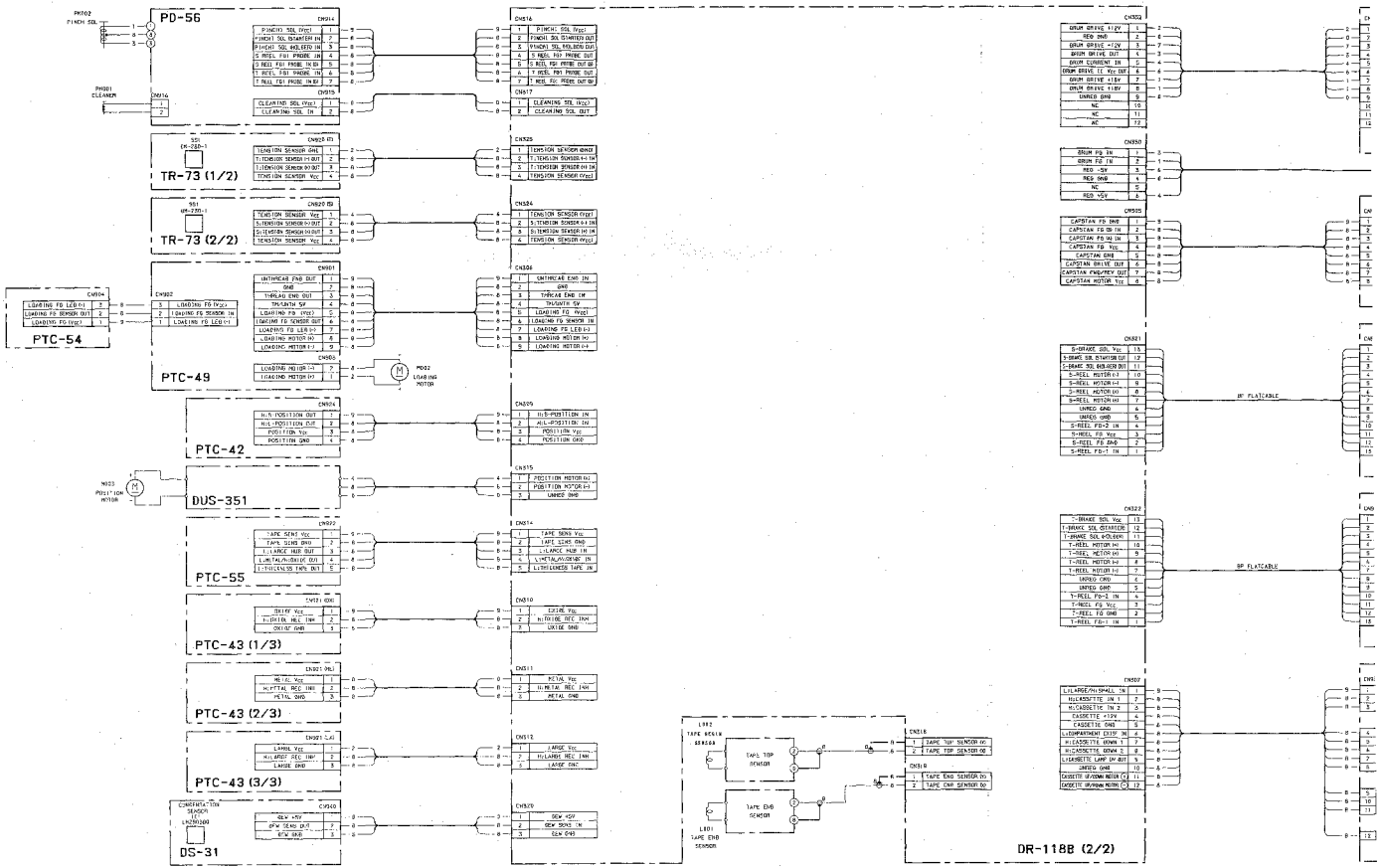

A B C D E F G H

FRAME B

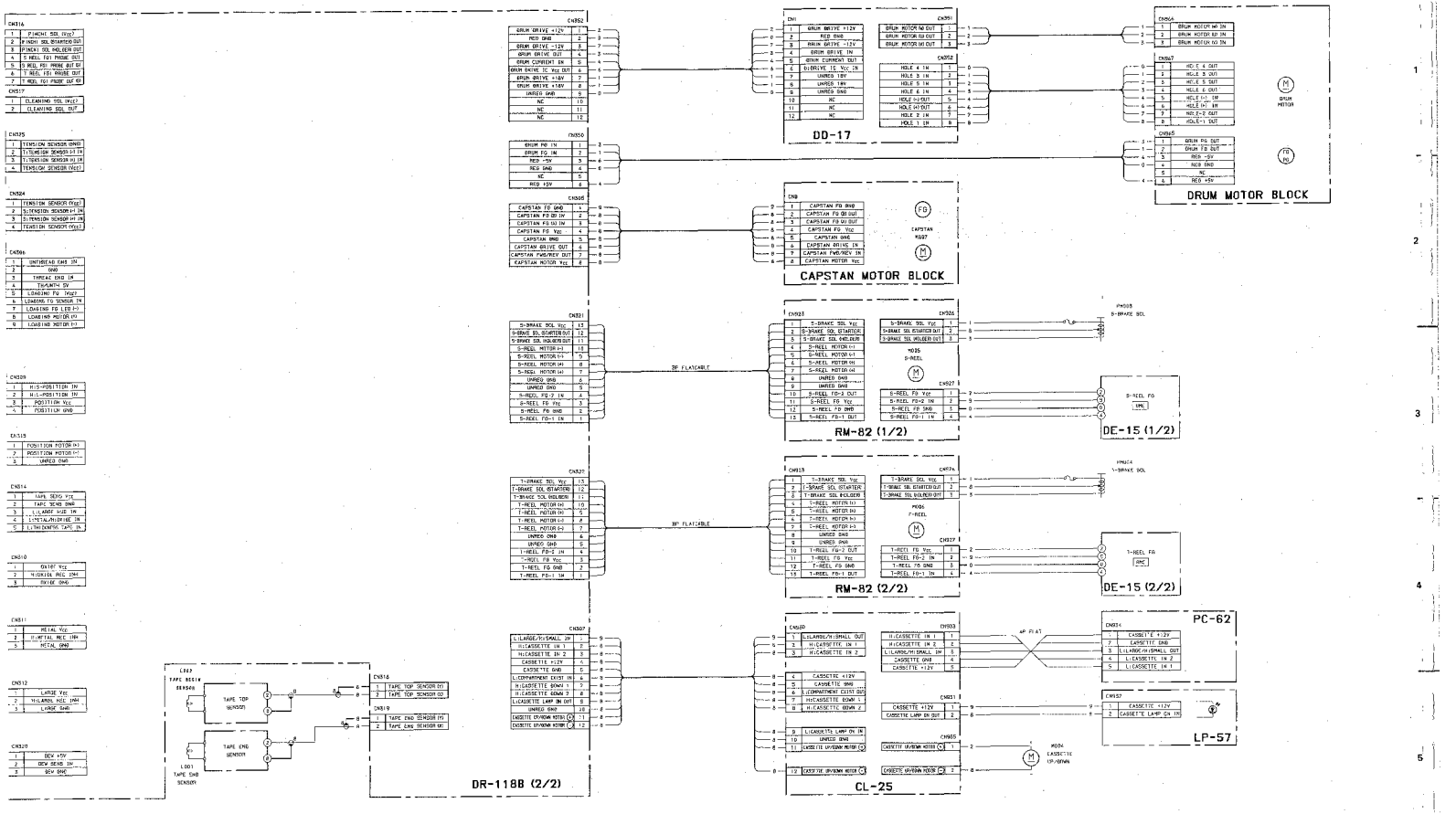
DD-17
DRUM MOTOR BLOCK
CAPSTAN MOTOR BLOCK
RM-82 (1/2)
DE-15 (1/2)
RM-82 (2/2)
DE-15 (2/2)
PC-62
LP-57
CL-25
DR-118B (2/2)
14-175
14-175

SECTION 15
SEMICONDUCTOR PIN ASSIGNMENT

この章の図の中には互換性のないダイオード、トランジスタ、ICが併記されていることがあります。部品の交換をするときには必ずサービス部品表を参照してください。
等価回路はICメーカーのData Bookに従いました。

The chart in this section may sometimes show diodes, transistors, and ICs that are not interchangeable. When replacing a component, be sure to refer to the parts list. The circuit diagram of each IC is obtained from IC data book published by the manufacturer.

TYPE PAGE

DIODE
10E-2 ····· 15-2
1S2076 ····· 15-2
1SS226 ····· 15-2
1SS303 ····· 15-2
1SS304 ····· 15-2
DA204U ····· 15-2
ERC84-009 ····· 15-2
RD??M ····· 15-2
RU3AM ····· 15-2
SB01-05CP ····· 15-2

LED
TLR214 ····· 15-2
TLUG154 ····· 15-2

TRANSISTOR
2SA1156 ····· 15-2
2SA1175 ····· 15-3
2SA1413 ····· 15-3
2SA1611 ····· 15-3
2SA768 ····· 15-3
2SB1116 ····· 15-3
2SB1151 ····· 15-2
2SB624 ····· 15-3
2SB731 ····· 15-2
2SB798 ····· 15-3
2SB962 ····· 15-3
2SC2120 ····· 15-3
2SC2654 ····· 15-3
2SC3012 ····· 15-3
2SC3632 ····· 15-4
2SC4175 ····· 15-4
2SC4177 ····· 15-4
2SC4213 ····· 15-4
2SD1276A ····· 15-4
2SD1615A ····· 15-4
2SD1623 ····· 15-4
2SD596 ····· 15-4
2SD788 ····· 15-4
2SD809 ····· 15-4
2SJ106 ····· 15-4
2SK208 ····· 15-4
2SK94 ····· 15-4
DTA144EU ····· 15-4

TYPE PAGE

DTC144EU ····· 15-4

IC
AM26LS30PC ····· 15-5
AM26LS32PC ····· 15-5
AN3920K ····· 15-5
AN3922NK ····· 15-6
BX-1098L ····· 15-6
BX3914 ····· 15-6
CX20060 ····· 15-6
CX20099 ····· 15-6
CX877 ····· 15-7
CXD1095Q ····· 15-7
CXD1132Q ····· 15-8
CXK1024P ····· 15-9
CXK5816M-10L ····· 15-9
CXK58257M-10L ····· 15-10
HA1241 ····· 15-10
HD14053BFP ····· 15-10
LA7205 ····· 15-11
LM2903M ····· 15-11
LM2903PS ····· 15-11
M51958BL ····· 15-11
M54523P ····· 15-11
M54529AP ····· 15-11
M54532P ····· 15-11
MB88341PFV ····· 15-12
MC14011BF ····· 15-12
MC14013BF ····· 15-12
MC14024BF ····· 15-12
MC14046BF ····· 15-13
MC14051BF ····· 15-13
MC14066BF ····· 15-13
MC14069UBF ····· 15-13
MC14070BF ····· 15-13
MC14081BF ····· 15-13
MC14528BF ····· 15-13
MC14538BF ····· 15-14
NJM4560MD ····· 15-14
NJM4565M-A ····· 15-14
RC4556D ····· 15-14
RC4556MA ····· 15-14
RC4558M ····· 15-14
RC4560DD ····· 15-14
RC5532DD ····· 15-14

TYPE PAGE

RC5532M ····· 15-14
RC7805FA ····· 15-14
RC7809FA ····· 15-14
RC78L05A ····· 15-14
RC78L09A ····· 15-14
RC79L05A ····· 15-14
S-81230AG-RB ····· 15-15
SN74HC00ANS ····· 15-15
SN74HC02ANS ····· 15-15
SN74HC04ANS ····· 15-15
SN74HC08ANS ····· 15-15
SN74HC11NS ····· 15-15
SN74HC138ANS ····· 15-16
SN74HC14ANS ····· 15-16
SN74HC153ANS ····· 15-16
SN74HC157ANS ····· 15-16
SN74HC245ANS ····· 15-16
SN74HC27NS ····· 15-16
SN74HC32ANS ····· 15-17
SN74HC367ANS ····· 15-17
SN74HC4024NS ····· 15-17
SN74HC541ANS ····· 15-17
SN74HC74ANS ····· 15-17
SN74HCU04ANS ····· 15-15
SN75179BP ····· 15-17
TA7267P ····· 15-18
TA7357AP ····· 15-18
TC4S01F ····· 15-18
TC74HC86AF ····· 15-18
TC7S00F ····· 15-18
TC7S08F ····· 15-18
TL072CPS ····· 15-18
TL082CPS ····· 15-18
TL084CNS ····· 15-19
TL431CPS ····· 15-19
UPC324G2 ····· 15-19
UPC358G2 ····· 15-19
UPC4558G2 ····· 15-14
UPC4560G2 ····· 15-14
UPC4570G2 ····· 15-19
UPC4574G2 ····· 15-19
UPC78N05H ····· 15-19
UPD70320L-8 ····· 15-20
UPD7201AC ····· 15-22

10E2
1S2076
RU3AM

1SS226
DA204U

1SS303

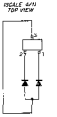

1SS304

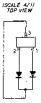

ERC84-009

RD ? ?M

SB01-05CP

TLR214 ; RED

TLUG154 ; GREEN

2SA1156
2SB1151
2SB731

2SA1175

2SB798

2SA1413
2SB862

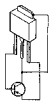

2SC2120

2SC2654

2SA1611
2SB624

2SC3012

2SA768

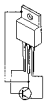

2SB1116

2SC3632

(SCALE 2/1)

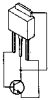

2SC4175
2SC4177
2SC4213
2SD596

(SCALE 4/1)
TOP VIEW

2SD1276A

2SD1616A
2SD1623

TOP VIEW (SCALE 4/1)

2SD788

2SD809

2SJ106

TOP VIEW (SCALE 4/1)

2SK208
2SK84

TOP VIEW (SCALE 4/1)

DTA144EU (R1 = 47K, R2 = 47K)

TOP VIEW (SCALE 4/1)

DTC144EU (R1 = 47K, R2 = 47K)

TOP VIEW (SCALE 4/1)

AM26LS30PC (ADVANCED MICRO DEVICES)

LINE DRIVER

– TOP VIEW –

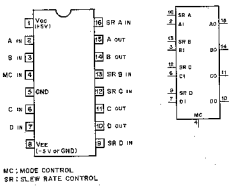

MC ; MODE CONTROL

SR ; SLEW RATE CONTROL

MC=1

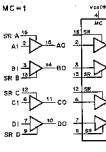

INPUTS		OUTPUTS
MC	DIA TO D	
1	0	0
1	1	1

0 ; LOW LEVEL
1 ; HIGH LEVEL

MC=0

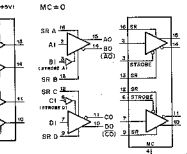

INPUTS			OUTPUTS	
MC	STROBE	DA & DB	A	B
0	0	0	0	1
0	0	1	1	0
0	1	X	HI-Z	HI-Z

X ; DON'T CARE
HI-Z ; HIGH IMPEDANCE

AM26LS32PC (ADVANCED MICRO DEVICES)

HIGH SPEED DIFFERENTIAL LINE RECEIVER

– TOP VIEW –

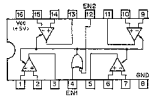

FUNCTION TABLE

EN2	EN1	OUTPUT
0	0	ENABLE
0	1	ENABLE
1	0	HI-Z
1	1	ENABLE

0 ; LOW LEVEL
1 ; HIGH LEVEL
HI-Z ; HIGH IMPEDANCE

	SENSE · INPUT VOLT
LS32	±200mV · ±7V
LS33	±500mV · ±15V

AN3920K (MATSUSHITA)

VTR FM AUDIO RF AMP

– TOP VIEW –

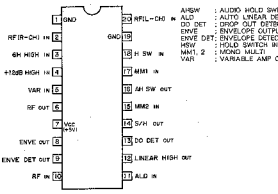

AHSW : AUDIO HOLD SWITCH OUTPUT
ALD : AUTO LINEAR DETECT INPUT
DO DET : DROP OUT DETECT OUTPUT
ENVE : ENVELOPE OUTPUT
ENVE DET : ENVELOPE DETECTOR OUTPUT
HSW : HOLD SWITCH INPUT
MM1, 2 : MONO MULTI
VAR : VARIABLE AMP CONTROL INPUT

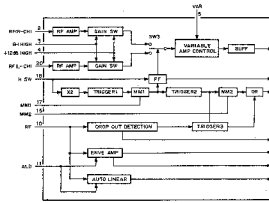

AN3922NK (MATSUSHITA)

VTR, FM AUDIO MODULATOR AND DEMODULATOR
– TOP VIEW –

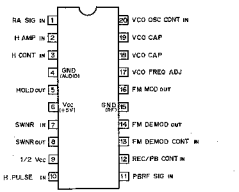

FM DEMOD	: FM DEMODULATION OUTPUT
FM DEMOD CONT	: FM DEMODULATION CONTROL INPUT
FM MOD	: FM MODULATION OUTPUT
H AMP	: HOLD AMP INPUT
H CONT	: HOLD CONTROL INPUT
H PULSE	: HOLD PULSE INPUT
PBRF SIG	: PB RF SIGNAL INPUT
RA SIG	: REC AUDIO SIGNAL INPUT
REC/PB CONT	: REC/PB CONTROL INPUT
SW/NR	: SWITCH NOISE REDUCTION INPUT/OUTPUT
VCO CAP	: VCO CAPACITOR
VCO FREQ ADJ	: VCO FREQUENCY ADJUSTMENT
VCO OSC CONT	: VCO OSCILLATION CONTROL INPUT

BX3914 (SONY)

CTL REC/PB AMPLIFIER
– PRINTED SIDE –

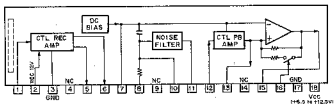

CX20060 (SONY)

ANALOG SWITCH
– TOP VIEW –

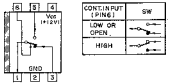

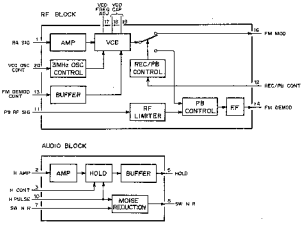

CX20099 (SONY) FLAT PACKAGE

VOLTAGE CONTROLLED AMP./DETECTOR/MAIN OPERATIONAL AMP
– TOP VIEW –

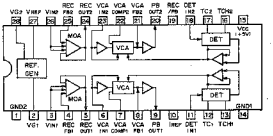

DET ; DETECTOR
TC ; TIME CONSTANT
TCH; TIME CONSTANT HOLD
VCA ; VOLTAGE CONTROLLED AMP

BX-1098L (SONY)

RF METER DRIVER
– PRINTED SIDE VIEW –

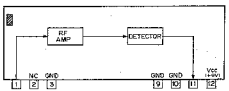

CX877 (SONY)

MOTOR DRIVER

– TOP VIEW –

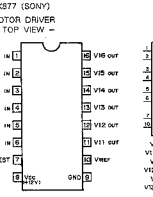

TIMING CHART

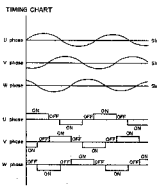

CXD1096Q (SONY) FLAT PACKAGE

C-MOS I/O PORT EXPANDER

– TOP VIEW –

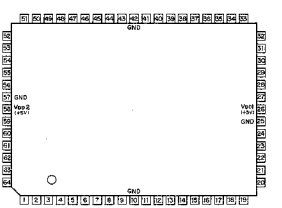

PIN NO.	IN	OUT	SYMBOL	PIN NO.	IN	OUT	SYMBOL	PIN NO.	IN	OUT	SYMBOL	PIN NO.	IN	OUT	SYMBOL
1			NC	17		O	PC6	33			NC	49		O	PX0
2			NC	18		O	PC7	34			NC	50		O	PX1
3		O	PB1	19			NC	35	O	I	D3	51			NC
4		O	PB2	20		O	PD0	36		O	D4	52		O	PX2
5		O	PB3	21		O	PD1	37		O	D5	53		O	PX3
6		O	PB4	22		O	PD2	38		O	D6	54		O	PA0
7		O	PB5	23		O	PD3	39		O	D7	55		O	PA1
8		O	PB6	24		O	PD4	40		O	CLR	56		O	PA2
9		O	PB7	25			GND	41		O	RST	57			GND
10			GND	26		I	Vpp=5V	42			GND	58			Vpp=5V
11		O	PC0	27		O	PD5	43		O	WR	59		O	PA3
12		O	PC1	28		O	PD6	44		O	RD	60		O	PA4
13		O	PC2	29		O	PD7	45		O	CS	61		O	PA5
14		O	PC3	30		O	D0	46		O	A0	62		O	PA6
15		O	PC4	31		O	D1	47		O	A1	63		O	PA7
16		O	PC5	32		O	D2	48		O	A2	64		O	PB0

CS	RD	WR	A2	A1	A0	MODE
0	0	1	0	0	0	PORT A → DATA BUS
0	0	1	0	0	1	PORT B → DATA BUS
0	0	1	0	1	0	PORT C → DATA BUS
0	0	1	0	1	1	PORT D → DATA BUS
0	0	1	1	0	0	PORT X → DATA BUS
0	0	1	1	0	1	———
0	0	1	1	1	0	———
0	0	1	1	1	1	———
0	1	0	0	0	0	DATA BUS → PORT A
0	1	0	0	0	1	DATA BUS → PORT B
0	1	0	0	1	0	DATA BUS → PORT C
0	1	0	0	1	1	DATA BUS → PORT D
0	1	0	1	0	0	DATA BUS → PORT X
0	1	0	1	0	1	———
0	1	0	1	1	0	DATA BUS → CTL REG.1
0	1	0	1	1	1	DATA BUS → CTL REG.2
1	X	X	X	X	X	DATA BUS ; HI-Z

0 ; LOW LEVEL
1 ; HIGH LEVEL
X ; DON'T CARE
HI-Z ; HIGH IMPEDANCE

D0–D7 ; DATA BUS INPUTS/OUTPUTS
CS ; CHIP SELECT INPUT
RD ; READ STROBE INPUT
WR ; WRITE STROBE INPUT
A0–A2 ; ADDRESS INPUT
RST ; RESET INPUT
CLR ; CLEAR INPUT
PA0–PA7 ; PORT A INPUTS/OUTPUTS
PB0–PB7 ; PORT B INPUTS/OUTPUTS
PC0–PC7 ; PORT C INPUTS/OUTPUTS
PD0–PD7 ; PORT D INPUTS/OUTPUTS
PX0–PX3 ; PORT X INPUTS/OUTPUTS

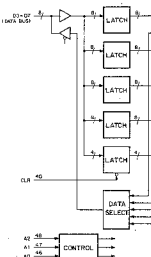

CXD1132Q (SONY) FLAT PACKAGE

C-MOS TIME CODE GENERATOR/READER
– TOP VIEW –

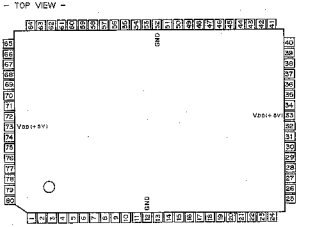

PIN NO.	I/O	SYMBOL	PIN NO.	I/O	SYMBOL	PIN NO.	I/O	SYMBOL	PIN NO.	I/O	SYMBOL
1	I/O	DB5	17	I	CCS	33	–	V_{SS}	49	I	C1M0	65	I	TCIN
2	I/O	DB4	18	I	CWR	34	I/O	DA1	50	O	C1M0	66	O	BCLK
3	I/O	DB3	19	I	CRD	35	I/O	DA0	51	O	C2M0	67	O	DATA
4	I/O	DB2	20	O	INT	36	I	DSP	52	–	GND	68	O	RFLD
5	I/O	DB1	21	I	CTBY	37	O	DTSE	53	O	CKO	69	O	RCSY
6	I/O	DB0	22	I	TST1	38	O	VACK	54	I	CKIN	70	O	LRF
7	O	STOP	23	I	TST2	39	I	SLLW	55	I	BCLK	71	O	RLSY
8	I/O	D7	24	I	TST3	40	O	RVDO	56	I	CCSI	72	I	RA2
9	I/O	D6	25	I	PON	41	I	RCS	57	I	S1	73	–	V_{SS}
10	I/O	D5	26	I	FLDI	42	I	VITC	58	O	VTGO	74	I	RA1
11	I/O	D4	27	I	RTIM	43	I	FRMI	59	O	VTO	75	I	RA0
12	–	GND	28	I	CSIN	44	O	FRMO	60	O	LTCO	76	I	RWR
13	I/O	D3	29	I	CTLI	45	O	CLSY	61	I	LRES	77	I	RRD
14	I/O	D2	30	I/O	DWR	46	I	HDI	62	I	VOE	78	I	RCS
15	I/O	D1	31	I/O	DA3	47	O	HDO	63	O	LSHO	79	I/O	RD7
16	I/O	D0	32	I/O	DA2	48	O	VDO	64	I	C1M1	80	I/O	RD6

SIGNAL DESCRIPTION

RA0–RA2	R ADDRESS INPUTS
RCS	R CHIP ENABLE INPUT ("L":ENABLE)
RD6–RD7	R DATA I/O
RRD	R READ INPUT ("L":READ)
RBSY	R BUSY OUTPUT
RWR	R WRITE INPUT ("L":WRITE)
C1M1	SYSTEM CLOCK INPUT
C1M0	CLOCK 1 OUTPUT (CKIN X 1/16)
C2M1	LTC READ CLOCK INPUT
C2M0	CLOCK 2 OUTPUT (CKIN X 1/8)
CCS	C CHIP ENABLE INPUT ("L":ENABLE) (when DSP is low) ADDRESS LATCH ENABLE INPUT ("H":ENABLE) (when DSP is high)
CDIR	CTL DIRECTION INPUT
CKIN	SYSTEM CLOCK INPUT

	VIDEO SIGNAL FORMAT	CKIN
	SMPTE 29.97DF 525/LINE	14.318MHz
	EBU 25FS 625/LINE	14.500MHz

CKO	CLOCK OUTPUT
CRD	C READ INPUT ("L":READ)
CTLI	CTL SIGNAL INPUT
CWR	C WRITE INPUT ("L":WRITE)
D0–D7	DATA I/O (when DSP is low)/ ADDRESS INPUTS
DA0–DA3	
	S ADDRESS INPUTS (when DSP is high) D ADDRESS OUTPUT (when DSP is low)
DATA	DEMODULATED SERIAL DATA OUTPUT
DCLK	DEMODULATED CLOCK OUTPUT
DSP	DISPLAY BUS SELECT INPUT DSP control CCS,DA0–DA3 and DWR.
DTSE	VITC DATA SEARCH FLAG OUTPUT
DWR	WRITE ENABLE OUTPUT ("L":ENABLE)(when DSP is low) R ADDRESS 4 INPUT (when DSP is high)
SA4	ADDRESS 4(S) INPUT
FLDI	FIELD REFERENCE INPUT ("L":FLD 1)
FRMI	FRAME SIGNAL INPUT
FRMO	FRAME SIGNAL OUTPUT
CCSI	COMPOSITE SYNC INPUT
CLSY	LOST SYNC FLAG OUTPUT
HDI	HORIZONTAL SYNC INPUT
HDO	HORIZONTAL SYNC OUTPUT
INT	ITEREUPT REQUEST OUTPUT
LRR	LTC READ REQUEST OUTPUT
LRES	LTC COUNTER RESET INPUT ("L":RESET)
LSHO	SYNCHRONOUS SIGNAL OUTPUT
LTCO	LTC SIGNAL OUTPUT
PON	SYSTEM RESET INPUT ("L":PON)
RCSI	COMPOSITE SYNC INPUT
RDSY	READ SYNC WORD DATA OUTPUT
RRES	RESET INPUT ("L":RTIM)
RFLD	FIELD DATA OUTPUT
RTIM	TIME ADDRESS RESET INPUT ("L":RESET)
RVDO	VITC READ DATA OUTPUT

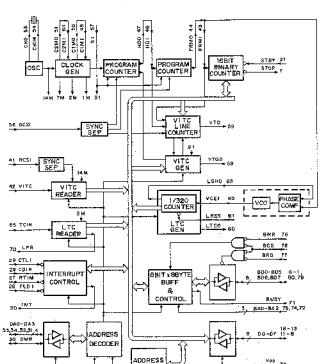

S1	SIGNAL FORMAT SELECT INPUT "H":NTSC/PAL=H 19.94ms 525LINE "L":PAL/SECAM 25ms 625LINE
SLCK	SELECT CLOCK INPUT

SLCK	CKIN	SYSTEM
L	14.31818MHz	14.5MHz
H	14.31818MHz	14.5MHz

SLLW	READ SIZE SELECT INPUT
STBY	STANDBY READ FLAG INPUT
STOP	STOP OUTPUT ("L":STOP)
TCIN	LONGITUDINAL TIME AND CONTROL CODE INPUT
TST1–TST3	TEST INPUT
VCE1	LTC CLOCK INPUT
VDO	HORIZONTAL SYNC DRIVE OUTPUT
VITC	VITC SIGNAL INPUT
VTGO	VITC GATE SIGNAL OUTPUT
VTO	VITC SIGNAL OUTPUT ("H":VITC)

CXK1024P (SONY)

MNOS 2K (256x8)-BIT NON-VOLATILE MEMORY
– TOP VIEW –

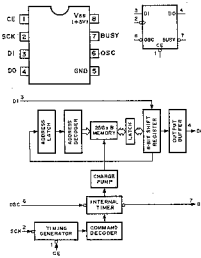

CXK6816M-10L (SONY) (ACCESS TIME 100nS)

CMOS 16K (2Kx8-BIT) STATIC RAM
– TOP VIEW –

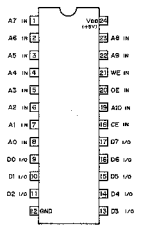

A0–A10 ; ADDRESS INPUTS
CE ; CHIP ENABLE INPUT
D0–D7 ; DATA INPUTS/OUTPUTS
OE ; OUTPUT ENABLE INPUT
WE ; WRITE ENABLE INPUT

MODE SELECTION

CONTROL INPUTS			MODE
CE	OE	WE	
1	X	X	NO CHANGE
0	1	1	DISABLE OUTPUT
0	0	1	READ
0	1	0	WRITE

0 ; LOW LEVEL
1 ; HIGH LEVEL
X ; DONT CARE

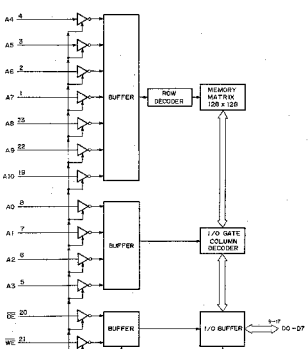

CXK58257M-10L (SONY) (ACCESS TIME = 100nS) FLAT PACKAGE
CMOS 256K (32768x8)-BIT STATIC RAM
– TOP VIEW –

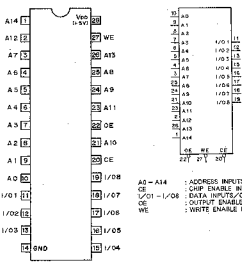

CE	OE	WE	MODE	I/O TERMINAL
H	×	×	NOT SELECT	HIGH IMPEDANCE
L	H	H	OUTPUT DISABLE	HIGH IMPEDANCE
L	L	H	READ	OUTPUT DATA
L	×	L	WRITE	INPUT DATA

H : HIGH LEVEL
L : LOW LEVEL
×: DON'T CARE

HA12411 (HITACHI)
FM IF AMPLIFIER
QUADRATURE DETECT
AUDIO AMPLIFIER
MUTING
AFC
AGC
TUNING METER DRIVER

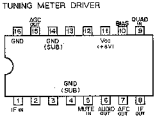

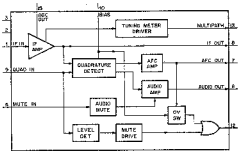

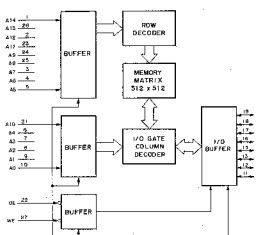

HD14053BFP (HITACHI) FLAT PACKAGE
CMOS TRIPLE 2-CHANNEL ANALOG MULTIPLEXERS/DEMULTIPLEXERS
– TOP VIEW –

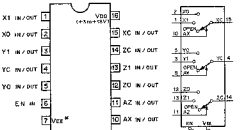

CONT. INPUTS EN	A	CHANNEL ON (X, Y, Z)
L	L	0
L	H	1
L	X	OPEN
H	X	OPEN

0 ; LOW LEVEL
1 ; HIGH LEVEL
X ; DON'T CARE.

LA7205 (SANYO)

AGC AMP, INPUT SELECT, AGC DET, COMPARATOR
– SIDE VIEW –

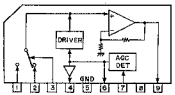

M54523P (MITSUBISHI)

BIPOLAR TRANSISTOR ARRAY WITH OPEN COLLECTOR
– TOP VIEW –

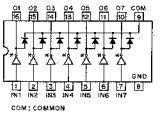

COM ; COMMON

LM2903M (RAYTHEON) FLAT PACKAGE
LM2903PS (TI) FLAT PACKAGE

DUAL VOLTAGE COMPARATORS
– TOP VIEW –

M54529AP (MITSUBISHI)

TRANSISTOR ARRAY
– TOP VIEW –

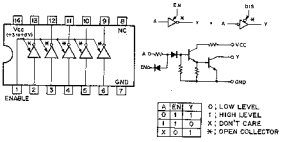

A	EN	Y
0	1	1
1	1	0
X	0	1

0 ; LOW LEVEL
1 ; HIGH LEVEL
X ; DON'T CARE
∋ ; OPEN COLLECTOR

M51958BL (MITSUBISHI)

VOLTAGE DETECT DELAY
– PRINTED SIDE VIEW –

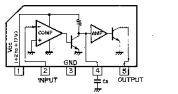

TIMING CHART

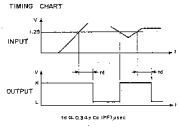

td (L-O) ≒ 0.84 × Cs (PF) μsec

M54532P (MITSUBISHI)

DARLINGTON TRANSISTOR ARRAY WITH CLAMP DIODE
– TOP VIEW –

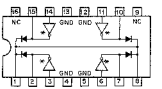

MB88341PFV (FUJITSU) FLAT PACKAGE

CMOS 8-BIT D/A CONVERTER

– TOP VIEW –

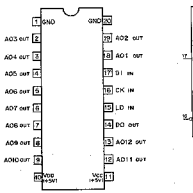

AO1 ~ AO12 : 8-BIT D/A OUTPUTS
CK : CLOCK INPUT
DI : SERIAL DATA INPUT
DO : DATA OUTPUT
LD : DATA LOAD CONTROL INPUT (H : LOAD)

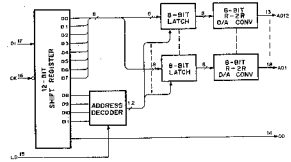

MC14011BF (MOTOROLA) FLAT PACKAGE

CMOS 2-INPUT NAND GATE

– TOP VIEW –

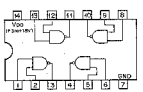

A	B	Y
0	0	1
0	1	1
1	0	1
1	1	0

0;LOW LEVEL
1;HIGH LEVEL

MC14013BF (MOTOROLA) FLAT PACKAGE

CMOS DUAL D-TYPE FLIP-FLOPS WITH DIRECT SET/RESET

– TOP VIEW –

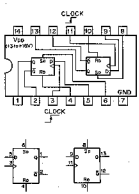

DIRECT R-S FLIP-FLOP

S	R	Q	Q
0	0	Qn	Qn
0	1	0	1
1	0	1	0
1	1	1	1

D-TYPE FLIP-FLOP

CKn	Dn+1	Qn+1	Qn+1
↑	0	0	1
↑	1	1	0
↓	×	Qn	Qn

0;LOW LEVEL
1;HIGH LEVEL

CLOCK OK…
CKn;BEFORE CLOCK
CKn+1;AFTER CLOCK

MC14024BF (MOTOROLA) FLAT PACKAGE

CMOS ASYNCHRONOUS 7-BIT BINARY COUNTER

– TOP VIEW –

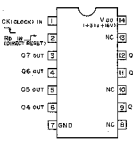

COUNT	INPUTS		OUTPUTS						
	CK	RES	Q1	Q2	Q3	Q4	Q5	Q6	Q7
0	X	1	0	0	0	0	0	0	0
1	↓	0	0	0	0	0	0	0	1
2	↓	0	0	0	0	0	0	1	0
3	↓	0	0	0	0	0	0	1	1
4	↓	0	0	0	0	0	1	0	0
125	↓	0	1	1	1	1	1	0	1
126	↓	0	1	1	1	1	1	1	0
127	↓	0	1	1	1	1	1	1	1
—	—	0	0	NO CHANGE					
—	—	1	0						

0 ; LOW LEVEL
1 ; HIGH LEVEL
X ; DON'T CARE

MC14046BF (MOTOROLA) FLAT PACKAGE
C-MOS PHASE LOCKED LOOP
– TOP VIEW –

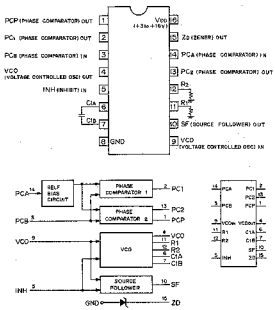

MC14089UBF (MOTOROLA)
C-MOS INVERTER
– TOP VIEW –

MC14070BF (MOTOROLA) FLAT PACKAGE
C-MOS QUAD EXCLUSIVE OR GATE
– TOP VIEW –

MC14051BF (MOTOROLA) FLAT PACKAGE
C-MOS 8-CHANNEL ANALOG MULTIPLEXER/DEMULTIPLEXER
– TOP VIEW –

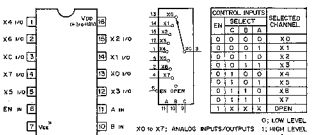

CONTROL INPUTS				SELECTED CHANNEL
EN	SELECT C	B	A	
0	0	0	0	X0
0	0	0	1	X1
0	0	1	0	X2
0	0	1	1	X3
0	1	0	0	X4
0	1	0	1	X5
0	1	1	0	X6
0	1	1	1	X7
1	X	X	X	OPEN

MC14081BF (MOTOROLA) FLAT PACKAGE
C-MOS 2-INPUT AND GATE
– TOP VIEW –

MC14066BF (MOTOROLA) FLAT PACKAGE
C-MOS QUAD BILATERAL ANALOG SWITCH
– TOP VIEW –

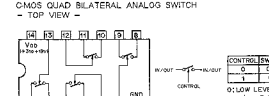

MC14528BF (MOTOROLA) FLAT PACKAGE
C-MOS RETRIGGERABLE/RESETTABLE MMV
– TOP VIEW –

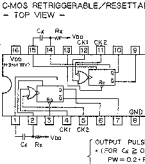

MC14538BF (MOTOROLA) FLAT PACKAGE
CMOS DUAL RETRIGGERABLE MONOSTABLE MULTIVIBRATORS
– TOP VIEW –

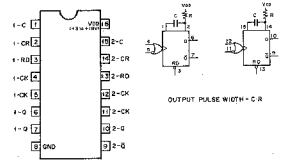

RETRIGGERABLE M.M.V

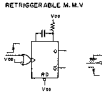

NON-RETRIGGERABLE M.M.V

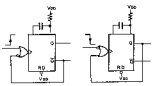

NJM4560MD (JRC) FLAT PACKAGE
NJM4560M-A (JRC) FLAT PACKAGE
RC4558M (RAYTHEON) FLAT PACKAGE
RC4560DD (RAYTHEON)
RC5532DD (RAYTHEON)
RC5532M (RAYTHEON) FLAT PACKAGE
UPC4558G2 (NEC) FLAT PACKAGE
UPC4560G2 (NEC) FLAT PACKAGE
DUAL OPERATIONAL AMPLIFIER
– TOP VIEW –

RC4556D (RAYTHEON)
RC4556MA (RAYTHEON) FLAT PACKAGE
OPERATIONAL AMPLIFIER
(WIDE BAND, DECOMPENSATED)
– TOP VIEW –

RC7805FA (RAYTHEON) + 5V
RC7809FA (RAYTHEON) + 9V
POSITIVE VOLTAGE REGULATOR
– FRONT VIEW –

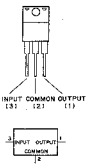

RC78L05A (RAYTHEON) + 5V
RC78L09A (RAYTHEON) + 9V
POSITIVE VOLTAGE REGULATOR (100mA)

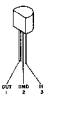

RC79L05A (RAYTHEON) – 5V
NEGATIVE VOLTAGE REGULATOR (100mA)

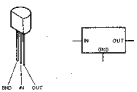

S-81230AG-RB (SEIKO) +5.0V FLAT PACKAGE

THREE TERMINAL POSITIVE VOLTAGE REGULATOR

– TOP VIEW –

SN74HC00ANS (TI) FLAT PACKAGE

C-MOS QUAD 2-INPUT NAND GATES

– TOP VIEW –

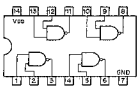

NOTE :

TYPE	Vcc
TC74AC00P TC74AC00F	+2 to +5.5V
MC74HCT00N 74ACT00PC	+5V
OTHER TYPES	+2 to +6V

SN74HC02ANS (TI) FLAT PACKAGE

C-MOS QUAD 2-INPUT NOR GATES

– TOP VIEW –

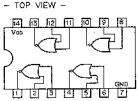

NOTE :

TYPE	Vcc
TC74AC02F	+2 to +5.5V
OTHER TYPES	+2 to +6V

SN74HC04ANS (TI) FLAT PACKAGE

SN74HCU04ANS (TI) FLAT PACKAGE

C-MOS HEX INVERTERS

– TOP VIEW –

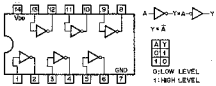

NOTE :

TYPE	Vcc
74ACT04 TYPES 74HCT04 TYPES	+5V
TC74AC04F	+2 to +5.5V
TC74ACT04F	+4.5 to +5.5V
OTHER TYPES	+2 to +6V

SN74HC08ANS (TI) FLAT PACKAGE

C-MOS QUAD 2-INPUT AND GATES

– TOP VIEW –

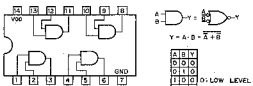

NOTE :

TYPE	Vcc
TC74AC08F	+2 to +5.5V
OTHER TYPES	+2 to +6V

SN74HC11NS (TI) FLAT PACKAGE

C-MOS 3-INPUT POSITIVE-AND GATE

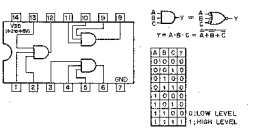

SN74HC138ANS (TI) FLAT PACKAGE

CMOS 3-TO-8 LINE DECODER/DEMULTIPLEXER
– TOP VIEW –

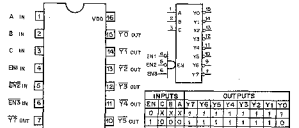

INPUTS				OUTPUTS							
EN	C	B	A	Y7	Y6	Y5	Y4	Y3	Y2	Y1	Y0
0	X	X	X	1	1	1	1	1	1	1	1
1	0	0	0	1	1	1	1	1	1	1	0
1	0	0	1	1	1	1	1	1	1	0	1
1	0	1	0	1	1	1	1	1	0	1	1
1	0	1	1	1	1	1	1	0	1	1	1
1	1	0	0	1	1	1	0	1	1	1	1
1	1	0	1	1	1	0	1	1	1	1	1
1	1	1	0	1	0	1	1	1	1	1	1
1	1	1	1	0	1	1	1	1	1	1	1

EN = ENT · EN2 · EN3

0 : LOW LEVEL
1 : HIGH LEVEL
X : DON'T CARE

NOTE :

TYPE	VDD
74AC/74HC	+2 to +6V
74ACT/74HCT	+5V
TC74AC138F	+2 to +5.5V

SN74HC157ANS (TI) FLAT PACKAGE

CMOS QUAD 2-LINE-TO-1-LINE DATA SELECTOR/MULTIPLEXER
– TOP VIEW –

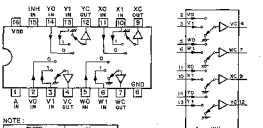

NOTE :

TYPE	VDD
74ACT157	+5V
TC74AC157P TC74AC157F	+2 to +5.5V
OTHER TYPES	+2 to +6V

CONT. IN	ON
INH	A	CHANNEL
0	0	0
0	1	1
1	X	GND

0 ; LOW LEVEL
1 ; HIGH LEVEL
X ; DON'T CARE

SN74HC14ANS (TI) FLAT PACKAGE

CMOS SCHMITT TRIGGER INVERTERS
– TOP VIEW –

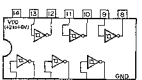

A	Y
0	1
1	0

0 ; LOW LEVEL
1 ; HIGH LEVEL

VDD	VT+	VT-
2.0V	0.7VDD	0.3VDD
4.5V	3.1V	2.7V
6.0V	3.6V	3.8V

NOTE :

TYPE	VDD
74AC/74HC	+2 to +6V
TC74AC14	+2 to +5.5V

SN74HC245ANS (TI) FLAT PACKAGE

CMOS BILATERAL BUS TRANSCEIVERS WITH 3-STATE OUTPUTS
– TOP VIEW –

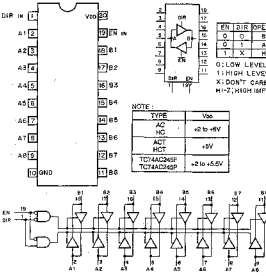

EN	DIR	OPERATION
0	0	B TO A
0	1	A TO B
1	X	HI-Z

0 ; LOW LEVEL
1 ; HIGH LEVEL
X ; DON'T CARE
HI-Z ; HIGH IMPEDANCE

NOTE :

TYPE	VDD
AC HC	+2 to +6V
ACT HCT	+5V
TC74AC245P TC74AC245F	+2 to +5.5V

SN74HC153ANS (TI) FLAT PACKAGE

CMOS DUAL 4-LINE-TO-1-LINE DATA SELECTOR/MULTIPLEXER
– TOP VIEW –

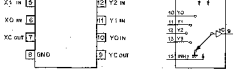

TYPE	VDD
EXCEPT FOL TYPE	+2 to +6V
74ACT153PC 74ACT153SJ	+5V
TC74AC153P	+2 to +5.5V

CONTROL IN			ON CHANNEL
INH	B	A	
0	0	0	0
0	0	1	1
0	1	0	2
0	1	1	3
1	X	X	GND

0 ; LOW LEVEL
1 ; HIGH LEVEL
X ; DON'T CARE

SN74HC27NS (TI) FLAT PACKAGE

CMOS 3-LINE POSITIVE-NOR GATE
– TOP VIEW –

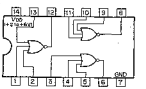

A	B	C	Y
0	0	0	1
0	0	1	0
0	1	0	0
0	1	1	0
1	0	0	0
1	0	1	0
1	1	0	0
1	1	1	0

0 ; LOW LEVEL
1 ; HIGH LEVEL

SN74HC32ANS (TI) FLAT PACKAGE
CMOS 2-INPUT OR GATES
– TOP VIEW –

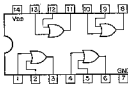

A	B	Y
0	0	0
0	1	1
1	0	1
1	1	1

0 : LOW LEVEL
1 : HIGH LEVEL

NOTE :

TYPE	Vcc
TC74AC32	+2 to +5.5V
OTHER TYPES	+2 to +6V

SN74HC541ANS (TI) FLAT PACKAGE
CMOS BUFFERS AND LINE DRIVERS WITH 3-STATE OUTPUTS
– TOP VIEW –

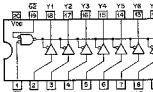

G1	G2	A	Y
0	0	0	0
0	0	1	1
1	X	X	HI-Z
X	1	X	HI-Z

0 : LOW LEVEL
1 : HIGH LEVEL
X : DON'T CARE
HI-Z : HIGH IMPEDANCE

NOTE :

TYPE	Vcc
AC	+2.0 to +5.5V
HC	+2 to +6V
ACT/HCT	+5V

SN74HC367ANS (TI) FLAT PACKAGE
CMOS BUS DRIVER WITH 3-STATE OUTPUTS
– TOP VIEW –

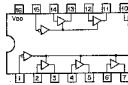

G1	G2	A	Y
0	0	0	0
0	0	1	1
1	X	X	HI-Z
X	1	X	HI-Z

0 : LOW LEVEL
1 : HIGH LEVEL
X : DON'T CARE
HI-Z : HIGH IMPEDANCE

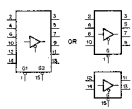

NOTE :

TYPE	Vcc
TC74AC367	+2 to +5.5V
OTHER TYPES	+2 to +6V

SN74HC74ANS (TI) FLAT PACKAGE
CMOS D-TYPE FLIP FLOPS WITH DIRECT SET/RESET
– TOP VIEW –

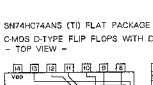

INPUTS			OUTPUTS	
SD	RD	CP	Q n+1	Q̄ n+1
0	1	X	1	0
1	0	X	0	1
0	0	X	1	1
1	1	↑	1	0
1	1	↓	0	1
1	1	0	Q n	Q̄ n

0 : LOW LEVEL
1 : HIGH LEVEL
X : DON'T CARE

NOTE :

TYPE	Vcc
74ACT	+5V
TC74AC74F	+2 to +5.5V
TC74ACT74P	+4.5 to +5.5V
OTHER TYPES	+2 to +6V

SN74HC4024NS (TI) FLAT PACKAGE
CMOS 7-BIT BINARY COUNTERS
– TOP VIEW –

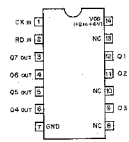

COUNT	INPUTS		OUTPUTS						
	CK	RD	Q7	Q6	Q5	Q4	Q3	Q2	Q1
0	X	L	L	L	L	L	L	L	L
1	↓	L	L	L	L	L	L	L	H
2	↓	L	L	L	L	L	L	H	L
3	↓	L	L	L	L	L	L	H	H
:	:	:	:	:	:	:	:	:	:
125	↓	L	H	H	H	H	H	L	H
126	↓	L	H	H	H	H	H	H	L
127	↓	L	H	H	H	H	H	H	H
–	L	L	NO CHANGE						
–	H	L							

L : LOW LEVEL
H : HIGH LEVEL
X : DON'T CARE

SN75179BP (TI)
BIPOLAR LINEAR IC
– TOP VIEW –

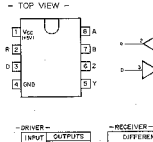

– DRIVER –

INPUT	OUTPUTS	
D	Y	Z
H	H	L
L	L	H

– RECEIVER –

DIFFERENTIAL INPUTS A – B	OUTPUTS R
VID ≧ 0.2V	H
–0.2V ≦ VID ≦ 0.2V	?
VID ≦ –0.2V	L

H=HIGH LEVEL L=LOW LEVEL ?=INDETERMINATE

TA7267P (TOSHIBA)

DC MOTOR DRIVER
– PRINTED SIDE VIEW –

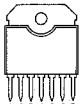

INPUTS		OUTPUTS		MODE
1	2	1	2	
1	1	O	O	BRAKE
0	1	O	1	ROTATION/ REV. ROTATION
1	0	1	O	REV. ROTATION / ROTATION
0	0	Hi-Z		STOP

0 ; LOW LEVEL
1 ; HIGH LEVEL.
Hi-Z; HIGH IMPEDANCE

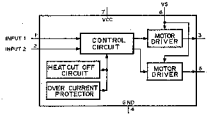

TA7357AP (TOSHIBA)

SYNC SEPARATOR/HD PULSE GENERATOR
– SIDE VIEW –

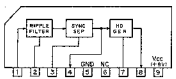

TC4S01F (TOSHIBA) FLAT PACKAGE

C-MOS 2-INPUT NOR GATE
– TOP VIEW –

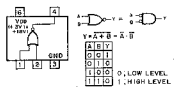

TC74HC86AF (TOSHIBA) FLAT PACKAGE

C-MOS EXCLUSIVE OR GATES
– TOP VIEW –

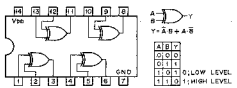

TYPE	Vcc
TC74AC86F	+2 to +5.5V
OTHER TYPES	+5 to +6V

TC7S00F (TOSHIBA) FLAT PACKAGE

C-MOS 2-INPUT NAND GATE
– TOP VIEW –

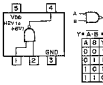

TC7S08F (TOSHIBA) FLAT PACKAGE

C-MOS 2-INPUT AND GATE
– TOP VIEW –

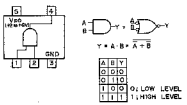

TL072CPS (TI) FLAT PACKAGE

OPERATIONAL AMPLIFIER
(LOW-NOISE, JFET-INPUT)
– TOP VIEW –

TL082CPS (TI) FLAT PACKAGE

OPERATIONAL AMPLIFIER
(J FET-INPUT)
– TOP VIEW –

TL084CNS (TI) FLAT PACKAGE
OPERATIONAL AMPLIFIER
(J FET INPUT)
– TOP VIEW –

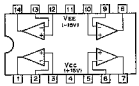

TL431CPS (TI) FLAT PACKAGE
ADJUSTABLE PRECISION SHUNT REGULATOR
– TOP VIEW –

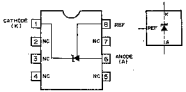

UPC324G2 (NEC) FLAT PACKAGE
QUAD OPERATIONAL AMPLIFIERS
– TOP VIEW –

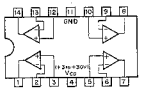

UPC358G2 (NEC) FLAT PACKAGE
DUAL OPERATIONAL AMPLIFIERS
– TOP VIEW –

UPC4570G2 (NEC) FLAT PACKAGE
OPERATIONAL AMPLIFIER
– TOP VIEW –

UPC4574G2 (NEC)
QUAD OPERATIONAL AMPLIFIER
– TOP VIEW –

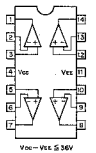

UPC78N05H (NEC) + 5V
POSITIVE VOLTAGE REGULATOR
– FRONT VIEW –

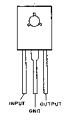

μPD70320L-8 (NEC)

CMOS 16-BIT MICROPROCESSOR

– TOP VIEW –

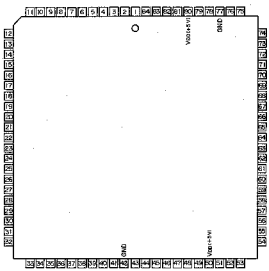

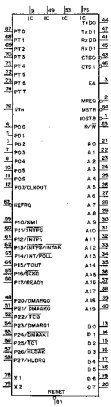

A0 – A19	: ADDRESS BUS OUTPUTS
CLKOUT	: SYSTEM CLOCK OUTPUT
CTS0, CTS1	: CLEAR TO SEND INPUT/OUTPUT
D0 – D7	: DATA BUS INPUTS/OUTPUTS
DMAAK0, DMAAK1	: DMA ACKNOWLEDGE CH0, CH1 OUTPUTS
DMARQ0, DMARQ1	: DMA REQUEST CH0, CH1 INPUTS
EA	: ROM-LESS MODE SET INPUT
HLDAK	: HOLD ACKNOWLEDGE OUTPUT
HLDRQ	: HOLD REQUEST INPUT
IC	: INTERNAL CONNECT
INTP0, INTP1	: INTERRUPT REQUEST INPUTS
INTP2	: INTERRUPT REQUEST INPUT
INTAK	: INTERRUPT ACKNOWLEDGE OUTPUT
IOSTB	: I/O READ/WRITE STROBE OUTPUT
MREQ	: MEMORY REQUEST OUTPUT
MSTB	: MEMORY READ/WRITE STROBE OUTPUT
NMI	: NON-MASKABLE INTERRUPT INPUT
P00 – P07	: PORT 0 INPUTS/OUTPUTS
P10 – P17	: PORT 1 INPUTS/OUTPUTS
P20 – P27	: PORT 2 INPUTS/OUTPUTS
P70 – P77	: PORT 3 INPUTS
RFM/PCEC	: INTERRUPT REQUEST INPUT
READY	: READY INPUT
REFRQ	: REFRESH REQUEST OUTPUT
RESET	: RESET INPUT
R/W	: READ AND WRITE CYCLE OUTPUT
RXD0, RXD1	: SERIAL DATA INPUTS
SCK0	: SERIAL CLOCK OUTPUT
TC0, TC1	: DMA (CH0/CH1) ENDING OUTPUTS
TOUT	: TIMER OUTPUT
TXD0, TXD1	: SERIAL DATA OUTPUTS
Vref	: REF. V FOR COMPARATOR INPUT
X1, X2	: CRYSTAL 1, 2

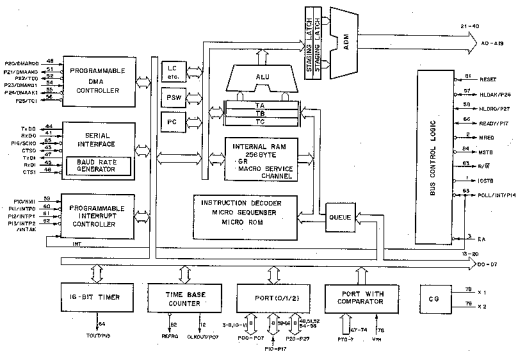

PIN No.	I/O	SYMBOL	PIN No.	I/O	SYMBOL	PIN No.	I/O	SYMBOL
1	O	IOSTB	29	O	A8	57	I/O	P25/HLDAK
2	O	MREQ	30	O	A9	58	I/O	P27/HLDRQ
3	I	EA	31	O	A10	59	I/O	P16/NMI
4	I/O	P00	32	O	A11	60	I/O	P11/INTP3
5	I/O	P01	33	O	A12	61	I/O	P12/INTP1
6	I/O	P02	34	O	A13	62	I/O	P13/INTP2/INTAK
7	I/O	P03	35	O	A14	63	I/O	P14/ROY/HOLL
8	I/O	P04	36	O	A15	64	I/O	P15/TOUT
9	—	IC	37	O	A16	65	I/O	P18/SCKO
10	I/O	P05	38	O	A17	66	I/O	P17/READY
11	I/O	P06	39	O	A18	67	I	PT9
12	I/O	P07/CLKOUT	40	O	A19	68	I	PT1
13	I/O	D0	41	I	RXD2	69	I	PT2
14	I/O	D1	42	—	GND	70	I	PT3
15	I/O	D2	43	I/O	CTS0	71	I	PT4
16	I/O	D3	44	O	TXD0	72	I	PT5
17	I/O	D4	45	I	RXD1	73	I	PT6
18	I/O	D5	46	I	CTS1	74	I	PT7
19	I/O	D6	47	O	TXD1	75	—	IC
20	I/O	D7	48	I/O	P20/DMARQ0	76	I	Vrw
21	O	A0	49	—	IC	77	—	GND
22	O	A1	50	I	Vpp(+5V)	78	—	X1
23	O	A2	51	I/O	P21/DMAAK0	79	—	X2
24	O	A3	52	I/O	P22/TC0	80	I	Vpd(+5V)
25	O	A4	53	—	IC	81	I	RESET
26	O	A5	54	I/O	P23/DMARQ1	82	O	REFRQ
27	O	A6	55	I/O	P24/DMAAK1	83	O	R/W
28	O	A7	56	I/O	P26/TC1	84	O	MSTB

UPD7201AC (NEC)

N-MOS MULTI-PROTOCOL SERIAL CONTROLLER
– TOP VIEW –

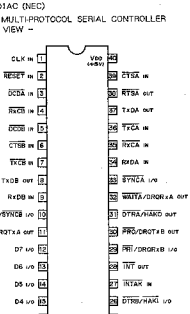

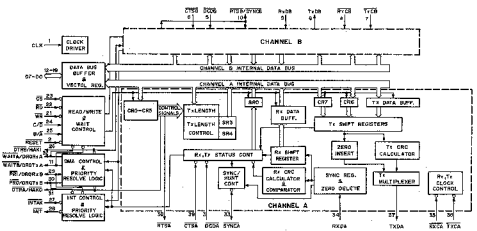

CLK; SYSTEM CLOCK
D7–D0; DATA BUS
CS; CHIP SELECT
WR; WRITE
RD; READ
C/D; CONTROL/DATA
B/A; CHANNEL B/CHANNEL A
INT; INTERRUPT REQUEST
INTAK; INTERRUPT ACKNOWLEDGE
PRI/DRDRxB; PRIORITY INPUT/DMA REQUEST RxB
PRO/DRDTxB; PRIORITY OUTPUT/DMA REQUEST TxB
WAITA/DRDRxA; WAIT A/DMA REQUEST RxA
WAITB/DRDTxA; WAIT B/DMA REQUEST TxA
DTRB/HAKI ; DATA TERMINAL READY/HOLD ACKNOWLEDGE INPUT
DTRA/HAKO; DATA TERMINAL READY/HOLD ACKNOWLEDGE OUTPUT
RxDA,RxDB; RECEIVE DATA A/B
TxDA,TxDB; TRANSMIT DATA A/B
RxCA,RxCB; RECEIVE CLOCK A/B
TxCA,TxCB; TRANSMIT CLOCK A/B
SYNCA; SYNCHRONIZATION A
RTSB/SYNCB; REQUEST TO SEND B/SYNCHRONIZATION B

CHANNEL SELECTION

B/A	C/D	WR	RD	CS	FANCTION
0	0	0	1	0	CHANNEL A / CHANNEL B — WRITE(TxD)
1					
0	0	1	0	0	CHANNEL A / CHANNEL B — READ(RxD)
1					
0	1	0	1	0	CHANNEL A / CHANNEL B — WRITE(COMMAND/PARAMETER-REGISTER)
1					
0	1	1	0	0	CHANNEL A / CHANNEL B — READ(STATUS/VECTER-REGISTER)
1					

CTSA,CTSB; CLEAR TO SEND A/B
DCDA,DCDB; DATA CARRIER DETECT A/B
RTSA; REQUEST TO SEND A

SECTION 16
REPLACEABLE PART AND OPTIONAL FIXTURE

16-1. NOTES ON REPAIR PARTS

(1) Safety Related Components Warning

Components marked with ⚠ on the schematic diagrams, exploded views and electrical spare parts list are critical to safe operation.

Replace these components with Sony parts whose part numbers appear in this manual or in service bulletins and service manual supplements published by Sony.

(2) Standardization of Parts

Repair parts supplied from Sony Parts Center may not always be identical with the parts which are actually in use due to "accommodating the improved parts and/or engineering changes" or "standardization of genuine parts".

This manual's exploded views and electrical spare parts list are indicating the part numbers of "the standardized genuine parts at present".

(3) Changes of Parts

Regarding engineering parts changes, refer to "Section 17. CHANGED PART"

(4) Stock of Parts

Parts marked with "o" SP (Supply Code) column of the spare parts list are not normally required for routine service work. Orders for parts marked with "o" will be processed, but allow for additional delivery time.

(5) Units for Capacitors, Inductors and Resistors

The following units are denoted as such in schematic diagrams, electrical parts list and exploded views unless otherwise specified.

Capacitors : μF
Inductors : μH
Resistors : Ω

(6) Tension Spring

(×× T) after a tension spring is shown on the parts list in order to indicate the number of spring turns required for the use.

(Example) TENSION, SPRING (20 T) :
This spring must be cut at its 20 th turn for actual use.

16-1

16-2. EXPLODED VIEW

Index of main mechanical parts/components

Mark	Item	Title	Page
①	S Reel Table	REEL CHASSIS (1)	16-4
②	RS Table (S) Block		
③	LS Motor Block		
④	LS Gear Block		
⑤	T Reel Table	REEL CHASSIS (2)	16-6
⑥	RS Table (T) Block		
⑦	Cassette Sensor		
⑧	Head Drum	DRUM & CLEANING ROLLER ASSEMBLY	16-8
⑨	Cleaning Roller Block		
⑩	Audio/TC Head	HEAD & PINCH PRESS ASSEMBLY	16-10
⑪	Capstan Motor		
⑫	Pinch Solenoid Block		
⑬	S Slider	RAIL & SLIDER ASSEMBLY	16-12
⑭	T Slider		
⑮	P Slider		
⑯	Threading Ring	THREADING RING	16-14
⑰	Threading Gear Box	THREADING GEAR BOX ASSEMBLY	16-16
⑱	Full Erase Head		
⑲	S Tension Regulator	TENSION REGULATOR ASSEMBLY	16-18
⑳	T Tension Regulator		
㉑	Tape End Sensor		
㉒	Tape Beginning Sensor		
㉓	Printed Circuit Board	REEL CHASSIS (3)	16-20
㉔	Cassette Compartment	CASSETTE COMPARTMENT ASSEMBLY	16-22
㉕	Upper Lid	CHASSIS & ORNAMENTAL PANEL BLOCK	16-24
	Bottom Panel		
	Cabinet (right)		
	Cabinet (left)		
㉖	Printed Circuit Boards	CARD RACK BLOCK	16-26
㉗	Front Panel	FRONT PANEL BLOCK	16-28
	Front Chassis		
	Cassette Guide		
㉘	Key Panel	FUNCTION CONTROL PANEL BLOCK	16-30
	Search Dial		
㉙	Connector Panel	REAR PANEL BLOCK	16-32

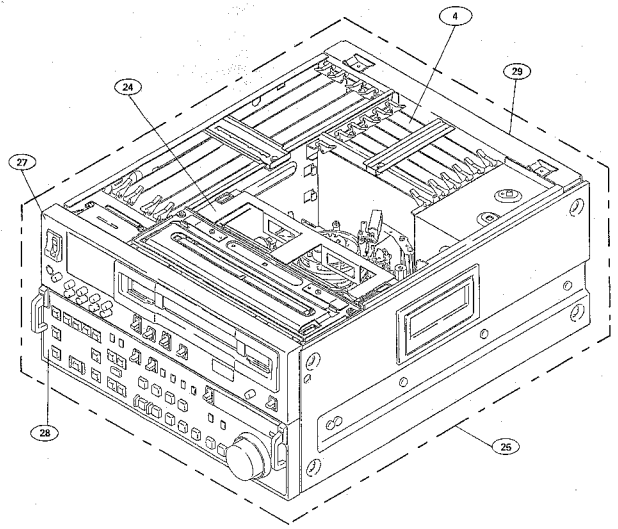

16-2

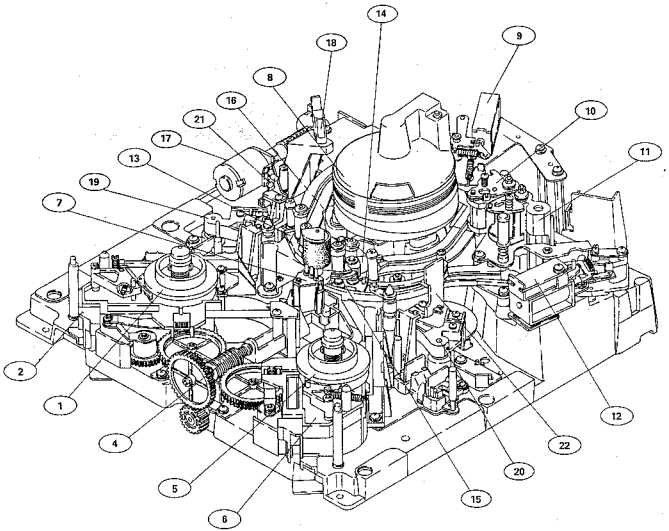
14
18
9
8
16
10
21
17
11
13
19
7
2
1
12
4
22
20
5
15
6

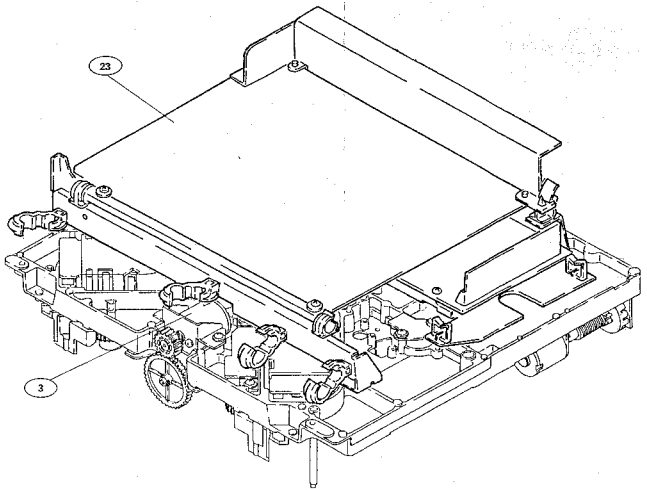
23
3

REEL CHASSIS (1)

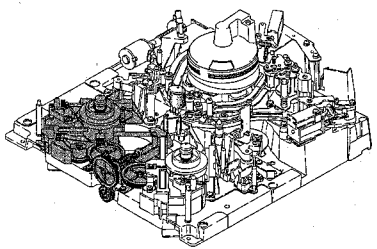

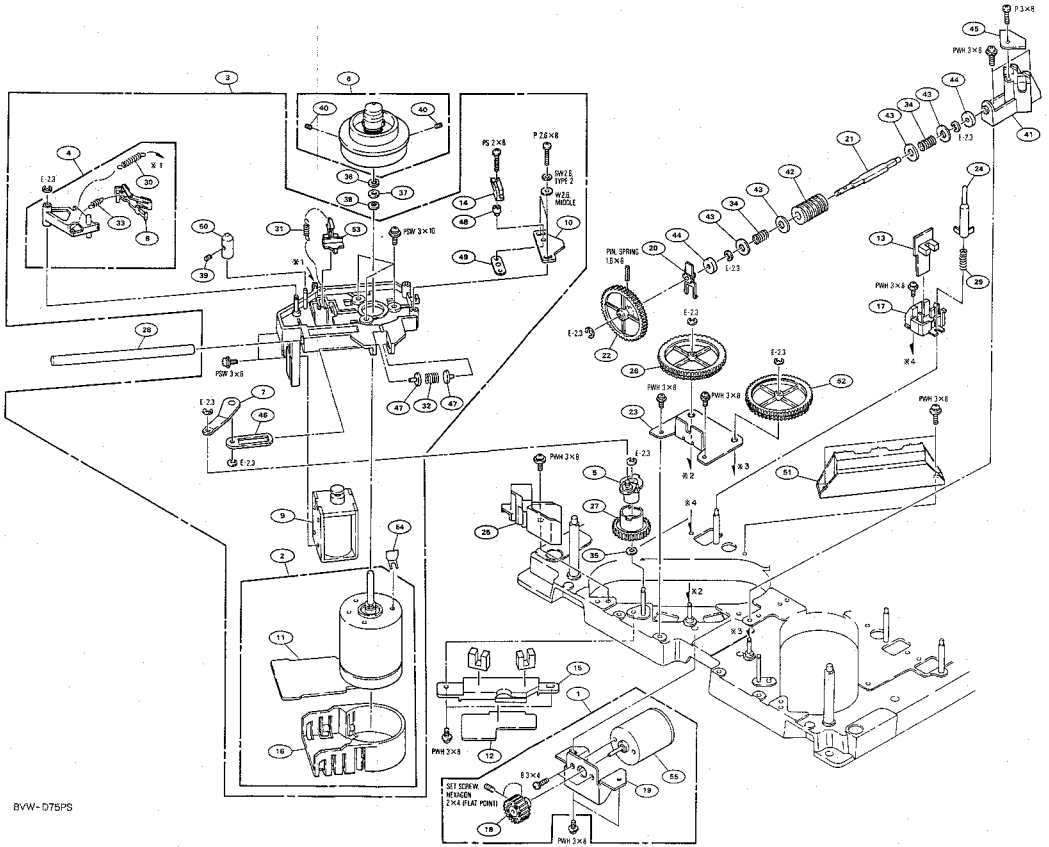

BVW-D75PS

16-4

No.	Part No.	SP	Description
1	A-6737-296-A	o	MOTOR ASSY, LS
2	A-6737-297-A	s	RM ASSY
3	A-6739-097-A	s	TABLE (S) BLOCK ASSY, RS
4	A-6741-066-A	o	BRAKE ASSY
5	X-3166-024-1	o	ARM (A) ASSY, CRANK
6	X-3166-025-1	s	TABLE ASSY, REEL
7	X-3166-060-1	o	ARM (B) ASSY, CRANK
8	X-3717-205-1	s	LINING ASSY
9	1-454-417-41	s	SOLENOID "S-BRAKE"
10	1-622-606-11	o	PRINTED CIRCUIT BOARD, DE-15
11	1-640-166-11	o	PRINTED CIRCUIT BOARD, RM-82
12	1-640-168-11	o	PRINTED CIRCUIT BOARD, PTC-42
13	1-640-169-11	o	PRINTED CIRCUIT BOARD, PTC-43
14	1-807-683-11	s	DMS
15	3-171-308-01	o	BRACKET, LS SENSOR
16	3-171-309-01	o	COVER, RM
17	3-171-312-01	o	HOLDER, MR SENSOR
18	3-171-316-01	s	GEAR, M
19	3-171-317-01	o	BRACKET, M
20	3-171-318-01	o	BEARING, WORM
21	3-171-319-01	o	SHAFT, WORM
22	3-171-320-01	o	GEAR, DRIVE
23	3-171-321-01	o	BRACKET, GEAR
24	3-171-396-01	s	LEVER (A), SENSOR
25	3-171-397-01	o	HOLDER (S), SHAFT
26	3-171-429-01	o	GEAR, LS
27	3-171-430-01	o	GEAR, CRANK
28	3-171-431-01	s	SHAFT, SLIDE
29	3-171-586-01	s	SPRING, COMPRESSION
30	3-307-381-00	s	SPRING, TENSION
31	3-464-103-XX	s	SPRING, TENSION (6T)
32	3-491-247-00	s	SPRING, COMPRESSION
33	3-648-217-00	o	SPRING, TENSION
34	3-659-324-00	s	SPRING, COMPRESSION
35	3-701-439-21	s	WASHER, POLY 3MM DIA., 0.5T
36	3-701-441-01	s	WASHER, POLY 4MM DIA., 0.13T
37	3-701-441-11	s	WASHER, POLY 4MM DIA., 0.25T
38	3-701-441-21	s	WASHER, POLY 4MM DIA., 0.50T
39	3-701-506-01	s	SET SCREW, DOUBLE POINT 3X4
40	3-701-507-00	s	SET SCREW, DOUBLE POINT, (M3X5)
41	3-717-208-01	o	HOLDER (A), SHAFT
42	3-717-210-01	s	WORM
43	3-717-212-01	o	WASHER (B), WORM
44	3-717-213-01	o	WASHER (A), WORM
45	3-717-224-01	s	RETAINER, SHAFT, SLIDE
46	3-717-230-01	o	BRACKET, LIMITER
47	3-717-231-01	o	HOLDER, LIMITER
48	3-717-232-01	o	SHAFT, FITTING, MR SENSOR
49	3-717-233-01	o	BRACKET, DE-15
50	3-717-266-01	o	CAP (S), CG SHAFT
51	3-717-388-01	o	TABLE, SLIDE
52	3-717-399-01	s	WHEEL, W
53	3-717-450-01	o	ARM, BRAKE RELEASE
54	3-717-625-01	s	SPACER
55	8-835-179-01	s	MOTOR, DC MCB2B15

REEL CHASSIS (2)

No.	Part No.	SP	Description
101	A-6737-207-A	s	RM ASSY
102	A-6739-038-A	s	TABLE (T) BLOCK ASSY, RS
103	A-6741-086-A	o	BRAKE ASSY
104	X-3166-024-1	o	ARM (A) ASSY, CRANK
105	X-3166-025-1	s	TABLE ASSY, REEL
106	X-3166-060-1	o	ARM (B) ASSY, CRANK
107	X-3717-205-1	s	LINING ASSY
108	1-454-417-41	s	SOLENOID "T-BRAKE"
109	1-622-606-11	o	PRINTED CIRCUIT BOARD, DE-15
110	1-640-165-11	o	PRINTED CIRUCIT BOARD, PTC-55
111	1-640-166-11	o	PRINTED CIRCUIT BOARD, RM-82
112	1-640-169-11	o	PRINTED CIRCUIT BOARD, PTC-43
113	1-807-683-11	s	DME
114	3-171-309-01	o	COVER, RM
115	3-171-312-01	o	HOLDER, MR SENSOR
116	3-171-313-01	o	COVER, MC
117	3-171-314-01	s	LEVER (B), SENSOR
118	3-171-328-01	o	HOLDER, MC DETECTION
119	3-171-396-01	s	LEVER (A), SENSOR
120	3-171-428-01	o	HOLDER (T), SHAFT
121	3-171-430-01	o	GEAR, CRANK
122	3-171-431-01	s	SHAFT, SLIDE
123	3-171-586-01	s	SPRING, COMPRESSION
124	3-307-381-00	s	SPRING, TENSION
125	3-464-103-XX	s	SPRING, TENSION (6T)
126	3-491-247-00	s	SPRING, COMPRESSION
127	3-554-202-00	o	SPRING, COMPRESSION
128	3-648-217-00	o	SPRING, TENSION
129	3-701-439-21	s	WASHER, POLY 3MM DIA., 0.5T
130	3-701-441-01	s	WASHER, POLY 4MM DIA., 0.13T
131	3-701-441-11	s	WASHER, POLY 4MM DIA., 0.25T
132	3-701-441-21	s	WASHER, POLY 4MM DIA., 0.50T
133	3-701-506-01	s	SET SCREW, DOUBLE POINT 2X4
134	3-701-507-00	s	SET SCREW, DOUBLE POINT (M3X5)
135	3-717-230-01	o	BRACKET, LIMITER
136	3-717-231-01	o	HOLDER, LIMITER
137	3-717-232-01	o	SHAFT, FITTING, MR SENSOR
138	3-717-233-01	o	BRACKET, DE-15
139	3-717-266-01	o	CAP (S), CG SHAFT
140	3-717-398-01	o	TABLE SLIDE
141	3-717-450-01	o	ARM, BRAKE RELEASE
142	3-717-625-01	s	SPACER

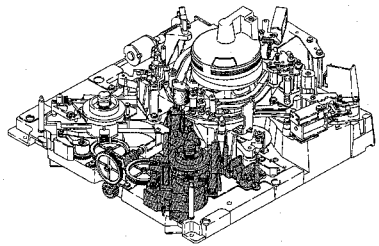

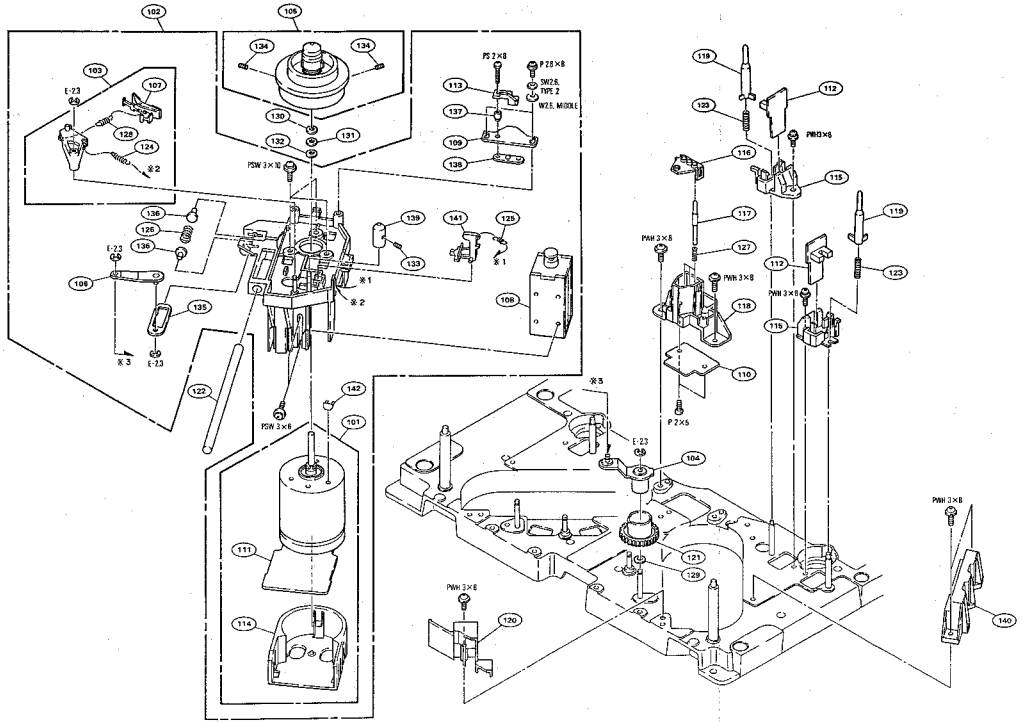

BVW-D75PS

16-7

DRUM AND CLEANING ROLLER ASSEMBLY

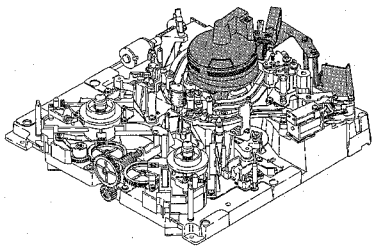

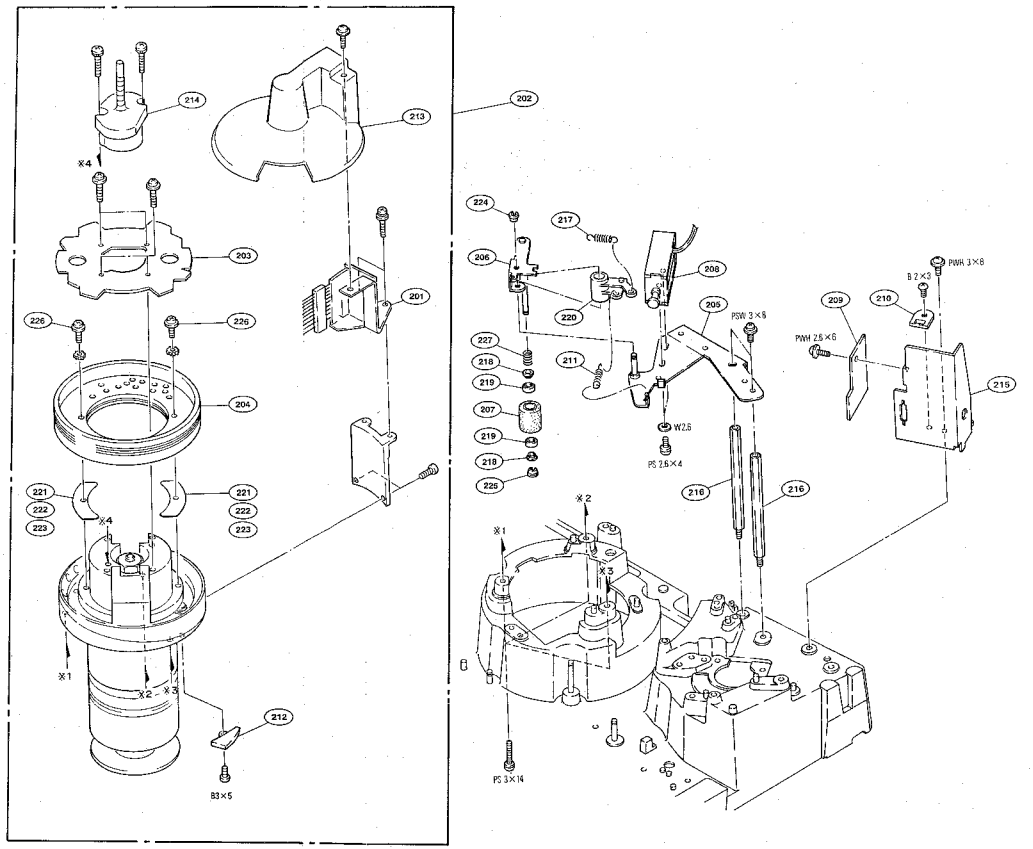

BVW-D75PS

16-8

No.	Part No.	SP	Description
201	—PENDING—	s	BRUSH ASSY
202	A-6050-854-A	s	DRUM ASSY, DBH-30A-R
203	A-6050-883-A	s	MOUNTED CIRCUIT BOARD, PA-109
204	A-6762-468-A	s	UPPER DRUM ASSY DBR-30-R
205	X-3166-324-1	o	C (BASE) ASSY
206	X-3166-325-1	o	ARM ASSY, C MAIN
207	X-3675-858-1	s	ROLLER SUB ASSY, C
208	1-454-372-11	s	SOLENOID "CLEANING ROLLER"
209	1-640-167-11	o	PRINTED CIRCUIT BOARD, DS-31
210	1-806-682-71	s	SENSOR, DEW CONDENSATION
211	3-140-263-XX	s	SPRING, TENSION (23T)
212	3-171-326-01	o	BRACKET (B), TAPE
213	3-172-348-01	o	COVER, BRUSH
214	3-172-349-01	s	RING(10), SLIP
215	3-172-933-01	o	BRACKET, DEW SENSOR
216	3-173-187-01	o	SUPPORT
217	3-542-475-00	s	SPRING, TENSION
218	3-655-966-00	s	SPACER, STEP
219	3-669-443-01	s	BEARING, BALL (NO FLANGE)
220	3-680-839-01	o	LEVER (2), C
221	3-683-828-01	s	SPACER, FLANGE
222	3-683-828-11	s	SPACER, FLANGE
223	3-683-828-21	s	SPACER, FLANGE
224	3-703-074-00	s	CAP 3, SHAFT
225	3-703-075-00	s	CAP 2, SHAFT
226	3-729-126-01	s	SCREW (M3x10)
227	4-879-762-00	s	SPRING, COMPRESSION

HEAD AND PINCH PRESS ASSEMBLY

No.	Part No.	SP	Description
301	A-6736-101-A	o	HEAD (RP) ASSY, AT
302	A-6749-125-A	o	PRESS ASSY, PINCH
303	X-3166-050-1	o	PLATE ASSY, ADJUSTMENT, RP
304	X-3166-061-2	o	BASE ASSY, PINCH PRESS
305	X-3166-236-1	o	PLATE ASSY, ADJUSTMENT, PB
306	X-3166-237-2	o	DECK (RP) ASSY, AT
307	3-174-316-01	s	FLANGE (LOWER)
308	X-3166-431-1	s	ROLLER (TG-6) ASSY, TAPE
309	1-454-338-00	s	SOLENOID "PINCH"
310	1-640-162-12	o	PRINTED CIRCUIT BOARD, PD-56
311	3-171-331-01	o	BASE, SOLENOID
312	3-171-332-01	o	ARM, PINCH PRESS
313	3-171-333-01	o	ARM, SUB PRESS
314	3-171-334-02	o	COLLAR, PINCH SHAFT
315	3-171-335-01	o	HOLDER, PC BOARD
316	3-171-344-01	s	SPRING, COMPRESSION
317	3-171-567-01	o	BRACKET, RP
318	3-171-568-01	o	CASE, SHIELD, AT
319	3-171-569-01	s	SPRING (A)
320	3-171-570-01	o	PLATE (R), ADJUSTMENT
321	3-172-441-01	s	SPRING (B)
322	3-172-442-01	o	PLATE (P), ADJUSTMENT
323	3-172-443-01	o	BRACKET, PB
324	3-173-176-01	s	NUT, ADJUSTMENT
325	3-578-532-00	s	SPRING, TENSION
326	3-642-719-01	o	SPACER (2.6X11)
327	3-701-441-21	s	WASHER, POLY 4MM DIA., 0.5OT
328	3-701-444-21	s	WASHER, POLY 6MM DIA., 0.5OT
329	3-738-730-01	s	SPRING, COMPRESSION
330	4-835-134-00	s	SCREW, TD 3.8X2.5
331	4-860-709-02	s	SPRING, COMPRESSION
332	8-825-771-11	s	HEAD, PS244-2103C
333	8-825-776-71	s	HEAD, MAGNETIC EPS244-2103F
334	8-835-445-01	s	MOTOR, DC SCV-0301A "CAPSTAN"

HEAD AND PINCH PRESS ASSEMBLY

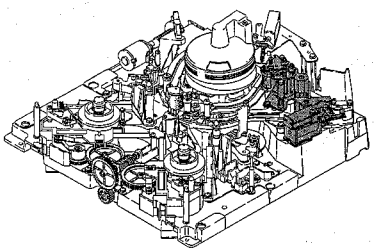

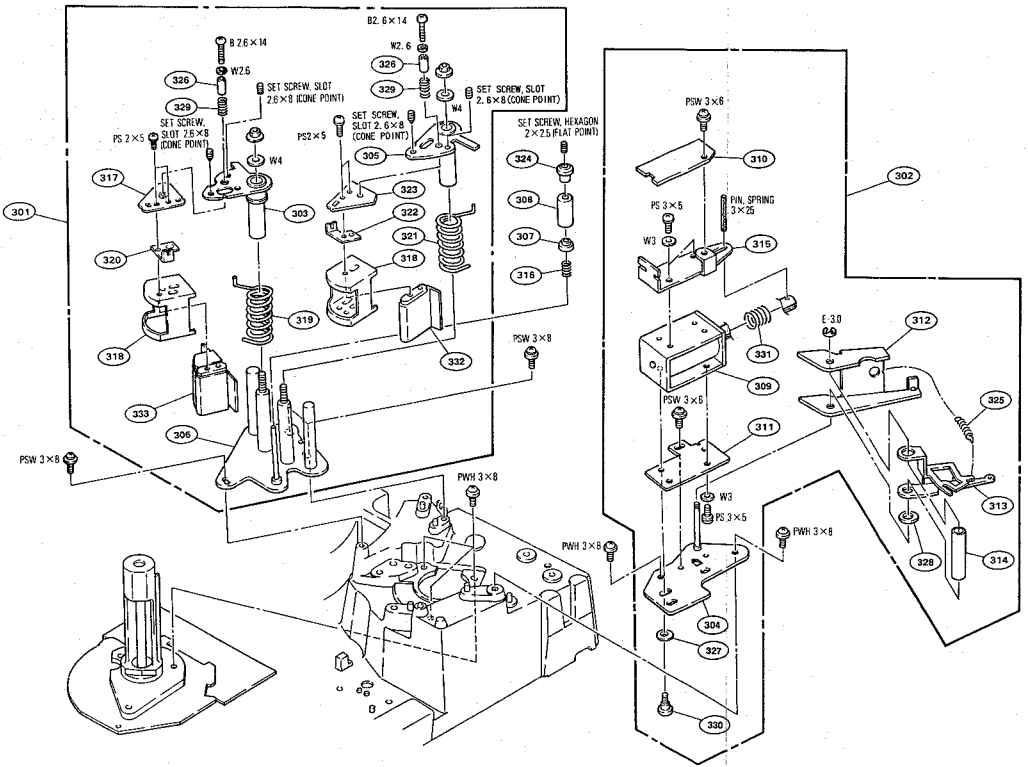

BVW-D75PS

16-11

RAIL AND SLIDER ASSEMBLY

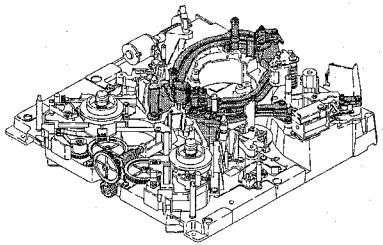

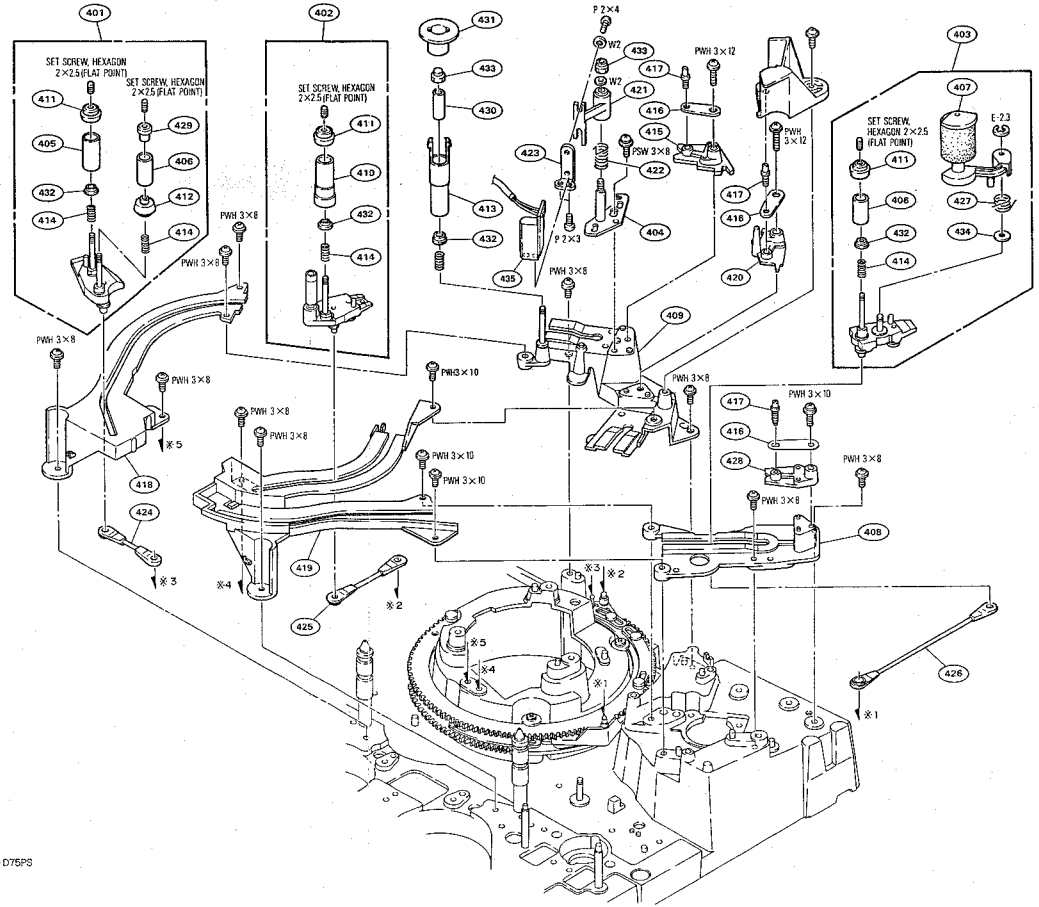

BVW-D75PS

16-12

No.	Part No.	SP	Description
401	A-6750-291-C	s	SLIDER ASSY, S
402	A-6750-292-C	s	SLIDER ASSY, T
403	A-6750-293-D	s	SLIDER ASSY, P
404	X-3166-027-1	o	BASE ASSY, CTL
405	X-3166-036-1	s	ROLLER (L) ASSY, TAPE
406	X-3166-037-1	s	ROLLER (M) ASSY, TAPE
407	X-3166-040-1	s	ARM ASSY, PINCH
408	X-3166-042-2	o	BASE SUB ASSY, P
409	X-3166-072-4	s	BASE SUB ASSY, ST
410	X-3166-320-1	s	TG-5 ASSY
411	3-174-315-01	s	FLANGE (UPPER)
412	3-174-316-01	s	FLANGE (LOWER)
413	X-3166-386-1	s	TG-4 (IP) ASSY
414	3-171-344-01	s	SPRING, COMPRESSION
415	3-171-345-01	s	PLATE, ADJUSTMENT, S
416	3-171-346-01	o	SPRING, ADJUSTMENT
417	3-171-347-01	o	SCREW, ADJUSTMENT
418	3-171-348-02	s	RAIL, S
419	3-171-349-03	o	RAIL, T
420	3-171-378-01	s	PLATE, ADJUSTMENT, T
421	3-171-381-02	o	ARM, CTL
422	3-171-382-01	s	SPRING, CTL
423	3-171-383-01	o	PLATE, SIDE, CTL
424	3-171-432-02	s	ROD, S
425	3-171-433-02	s	ROD, T
426	3-171-434-02	s	ROD, P
427	3-171-498-01	s	SPRING, PINCH ARM RETURN
428	3-171-515-01	s	PLATE, ADJUSTMENT, P
429	3-173-176-01	s	NUT, ADJUSTMENT
430	3-173-648-01	o	RETAINER, BEARING
431	3-174-213-01	s	WHEEL, FLY (P)
432	3-655-966-00	s	SPACER, STEP
433	3-698-829-01	s	NUT (M2)
434	3-701-439-01	s	WASHER, POLY 3MM DIA., 0.13T
435	8-825-776-41	s	HEAD PS244-21C "CTL"

THREADING RING

No.	Part No.	SP	Description
501	A-6750-289-A	o	RING ASSY, T
502	A-6750-290-A	o	RING ASSY, S
503	X-3166-028-1	o	SLIDER ASSY, P
504	X-3166-029-1	o	SLIDER ASSY, T
505	3-171-384-01	o	SPRING, TENSION
506	3-171-385-01	o	SPRING, TENSION
507	3-171-386-01	o	SPRING, TENSION
508	3-171-435-01	o	ROLLER (A), RING
509	3-171-436-01	o	ROLLER (B), RING
510	3-171-468-01	o	SPRING, TENSION
511	3-701-439-11	s	WASHER, POLY 3MM DIA., 0.2ST

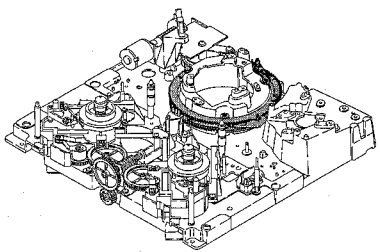

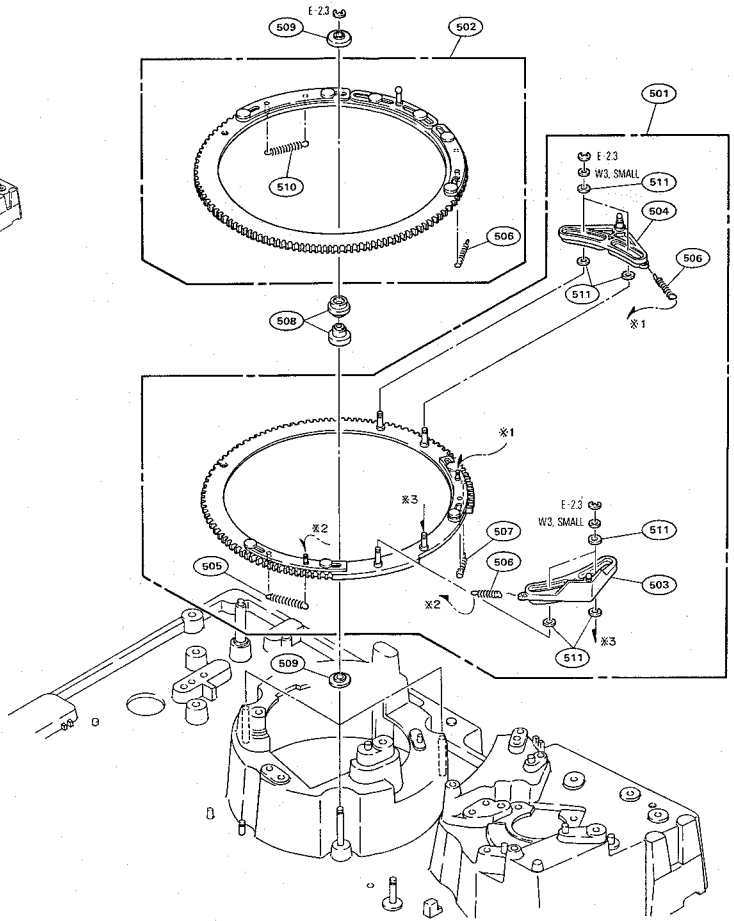
E-2.3
509
502
501
510
506
E-2.3
W3, SMALL
511
504
506
511
※1
508
※1
※3
※2
507
505
506
E-2.3
W3, SMALL
511
503
※2
※3
511
509

THREADING GEAR BOX ASSEMBLY

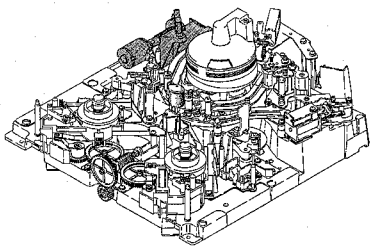

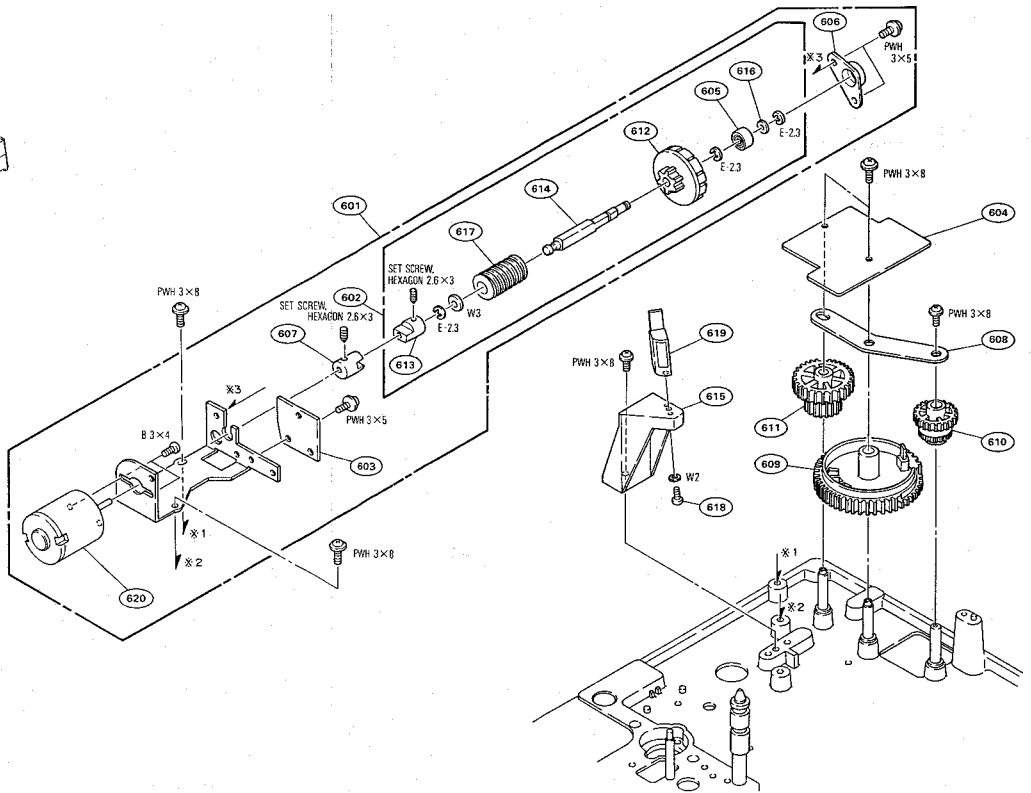

8VW-D75PS

16-16

No.	Part No.	SP	Description
601	A-6750-294-A	s	MOTOR ASSY, LOADING
602	A-6750-295-A	o	WORM ASSY
603	1-640-163-11	o	PRINTED CIRCUIT BOARD, PTC-54
604	1-640-164-11	o	PRINTED CIRCUIT BOARD, PTC-49
605	2-621-007-01	s	BEARING, BALL, (B) (NO FLANGE)
606	3-171-336-01	o	HOLDER, BEARING
607	3-171-337-01	o	JOINT (1)
608	3-171-352-01	o	REINFORCEMENT
609	3-171-353-02	o	GEAR, MAIN
610	3-171-354-02	o	GEAR, S
611	3-171-355-01	o	WHEEL, WORM
612	3-171-389-01	o	RING, FG
613	3-171-390-01	o	JOINT (2)
614	3-171-391-01	o	SHAFT, WORM
615	3-171-571-01	o	BASE, FE
616	3-701-439-21	s	WASHER, POLY 3MM DIA., 0.5OT
617	3-717-210-01	s	WORM
618	3-720-012-01	s	SCREW (M2X5)
619	8-825-770-72	s	HEAD, FE EF291-21 "FULL ERASE"
620	8-835-179-01	s	MOTOR, DC MCB2B15

TENSION REGULATOR ASSEMBLY

No.	Part No.	SP	Description
701	X-3166-037-1	s	ROLLER (M) ASSY, TAPE
702	X-3166-043-1	o	ARM ASSY, CASSETTE EXIT
703	X-3166-047-1	o	ARM ASSY, SUB DRIVING
704	X-3166-048-2	o	GEAR SUB ASSY, DRIVING
705	X-3166-051-1	s	ARM ASSY, S TENSION REGULATOR
706	X-3166-052-1	s	ROLLER (S-T) ASSY, TAPE
707	X-3166-053-1	o	YOKE ASSY, MAGNET
708	X-3166-054-1	o	ARM ASSY, DRIVING
709	X-3166-055-1	s	SUPPORT ASSY, TENSION REGULATOR
710	X-3166-057-1	s	ARM ASSY, T TENSION REGULATOR
711	X-3166-059-1	o	ARM ASSY, DRIVING
712	3-174-315-01	s	FLANGE (UPPER)
713	3-174-316-01	s	FLANGE (LOWER)
714	1-543-316-31	s	HEAD, SENSING
715	1-640-161-11	o	PRINTED CIRCUIT BOARD, TR-73
716	2-279-715-01	s	RIVET, NYLON
717	3-140-194-XX	s	SPRING, TENSION (2ST)
718	3-171-350-01	o	STOPPER, T
719	3-171-351-01	o	STOPPER, TENSION REGULATOR
720	3-171-392-01	s	HOLDER, DME
721	3-171-516-01	o	HOLDER, S SENSOR
722	3-171-519-02	s	HOLDER, T SENSOR
723	3-171-520-01	o	DISK (A), S TENSION REGULATOR
724	3-171-579-02	o	SPRING, LEAF, TENSION REGULATOR
725	3-171-580-01	o	PROTECTOR
726	3-171-592-01	o	STOPPER, S
727	3-172-763-01	o	HOLDER, SENSOR HARNESS
728	3-173-172-01	s	FLANGE, LOWER
729	3-173-176-01	s	NUT, ADJUSTMENT
730	3-701-439-21	s	WASHER, POLY, 3MM DIA., 0.5T
731	3-701-447-21	s	WASHER,
732	3-701-448-21	s	WASHER, POLYETHYLENE
733	4-879-563-00	s	SPRING, COMPRESSION
734	4-879-762-00	s	SPRING, COMPRESSION

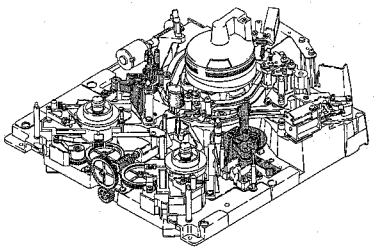

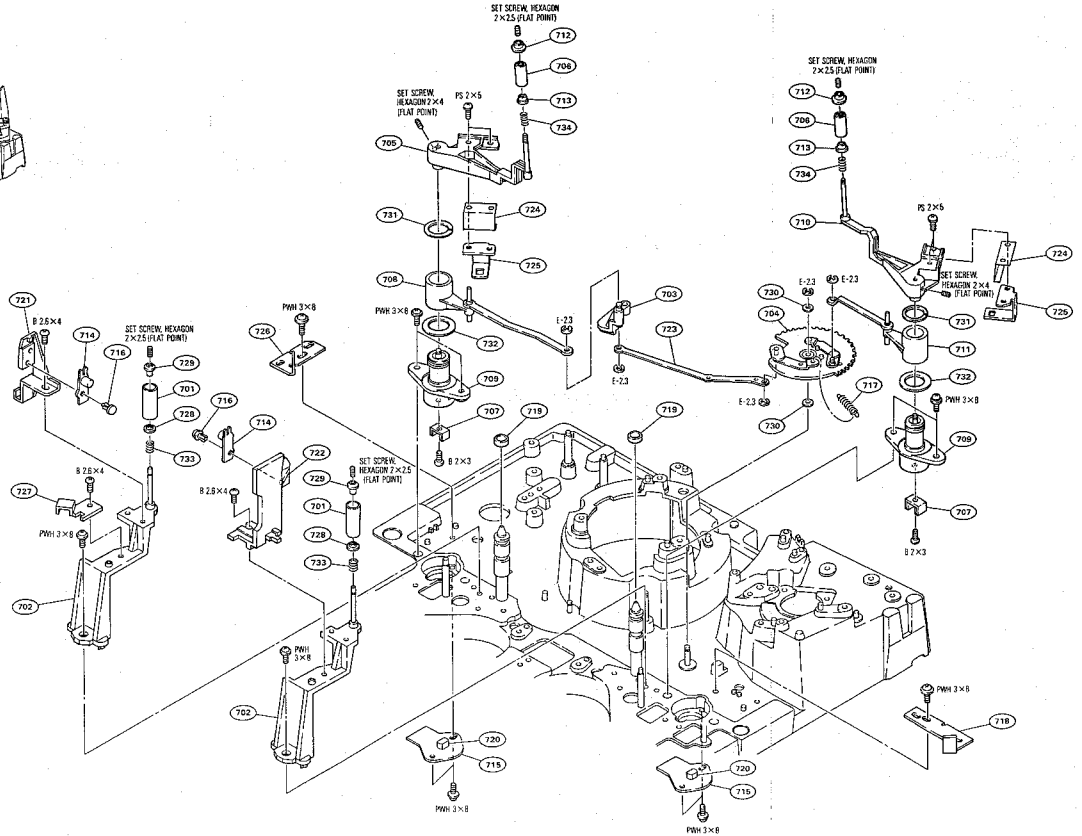

BVW-D75PS

16-19

REEL CHASSIS (3)

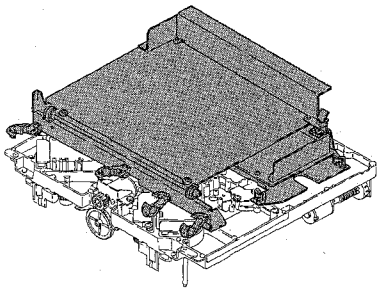

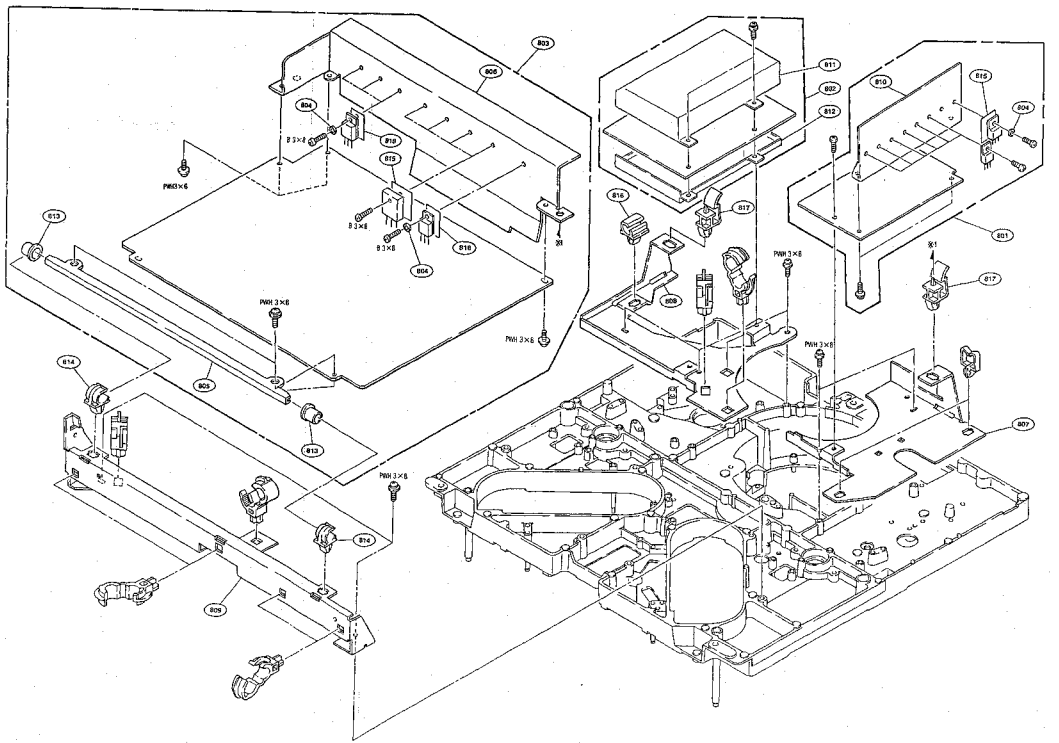

BVW-D75PS

16-20

No.	Part No.	SP	Description
801	A-6715-455-A	o	MOUNTED CIRCUIT BOARD, DD-17
802	A-6715-456-A	o	MOUNTED CIRCUIT BOARD, DT-29
803	A-6717-631-A	o	MOUNTED CIRCUIT BOARD, DR-118B
804	2-371-561-00	s	BUSHING (P), INSULATING
805	3-171-393-01	o	SUPPORT, DR
806	3-171-493-01	o	HEAT SINK (A)
807	3-171-494-02	o	PLATE, FIXED, DD
808	3-171-505-02	o	PLATE, FIXED, DT
809	3-171-506-02	o	PLATE, FIXED, DR
810	3-172-462-01	o	HEAT SINK (C)
811	3-172-469-01	o	CASE (A), DT SHIELD
812	3-172-470-01	o	CASE (B), DT SHIELD
813	3-646-084-00	o	CAP, REINFORCEMENT
814	3-646-086-00	o	HOLDER, ROD
815	3-860-978-00	s	SHEET, HEAT RESISTING
816	3-703-072-00	o	HOLDER, PCB
817	3-703-141-00	o	HOLDER, PCB
818	4-911-232-01	s	SHEET, INSULATING

CASSETTE COMPARTMENT ASSEMBLY

No.	Part No.	SP	Description
901	X-3166-062-1	o	SHAFT ASSY, PRESS ROLLER
902	X-3166-063-1	o	ARM ASSY, PRESS
903	X-3166-064-1	o	PULLEY (2) ASSY
904	X-3166-065-1	o	DECK (L) ASSY, PULLEY
905	X-3166-066-1	o	DECK (R) ASSY, PULLEY
906	X-3166-067-1	o	SLIDER (R) ASSY
907	X-3166-068-1	o	SLIDER (L) ASSY
908	X-3166-069-1	o	PULLEY ASSY
909	X-3166-217-1	s	MIRROR ASSY
910	1-690-106-11	s	WIRE, FLEXIBLE CARD 5P
911	2-621-007-01	s	BEARING, BALL, (B) (NO FLANGE)
912	3-171-367-01	o	SWITCH (R), IN
913	3-171-398-01	o	SWITCH (L), IN
914	3-171-399-01	o	GUIDE (R), CASSETTE
915	3-171-400-01	o	GUIDE (L), CASSETTE
916	3-171-418-01	s	WORM
917	3-171-419-01	s	WHEEL
918	3-171-420-01	o	SHUTTER
919	3-171-421-01	o	SLIDER, DOOR SWITCHING
920	3-171-422-01	o	LEVER, DOOR SWITCHING
921	3-171-423-01	o	JOINT, MOTOR
922	3-171-424-01	o	HOLDER, SENSOR
923	3-171-457-01	o	SHAFT, JOINT
924	3-171-458-01	s	BELT, TIMING
925	3-171-459-01	s	ROLLER, GUIDE
926	3-171-460-01	s	ROLLER, SLIDER
927	3-171-461-01	o	SHAFT, RETAINER, L CASSETTE
928	3-171-462-01	o	HOLDER, SHAFT
929	3-171-463-01	o	PLATE
930	3-171-464-01	o	SPRING, LEAF
931	3-171-465-01	o	GEAR, DRIVING
932	3-171-466-01	o	GEAR, LIMITER
933	3-171-477-01	o	WHEEL, WORM
934	3-171-478-01	o	RUBBER, LIMITER
935	3-171-479-01	o	GEAR, MIDWAY
936	3-171-480-01	o	SHAFT, WORM WHEEL
937	3-171-508-01	o	HOLDER, LAMP
938	3-171-510-01	s	DOOR, CASSETTE
939	3-554-122-00	s	SPRING, TENSION
940	3-573-932-01	s	SPRING, TENSION
941	3-578-398-00	s	SPRING, TENSION
942	3-579-758-00	s	SPRING, COMPRESSION
943	3-646-214-00	s	SPRING
944	3-660-815-00	o	CLIP, CABLE
945	3-677-193-00	o	PIN, STOPPER
946	3-698-217-01	s	BEARING (NO FLANGE), BALL
947	3-712-786-01	s	DAMPER, OIL
948	3-717-369-03	o	STOPPER, DOOR
949	4-858-799-01	s	SPRING, TENSION
950	8-835-179-01	s	MOTOR, DC MCR2B15

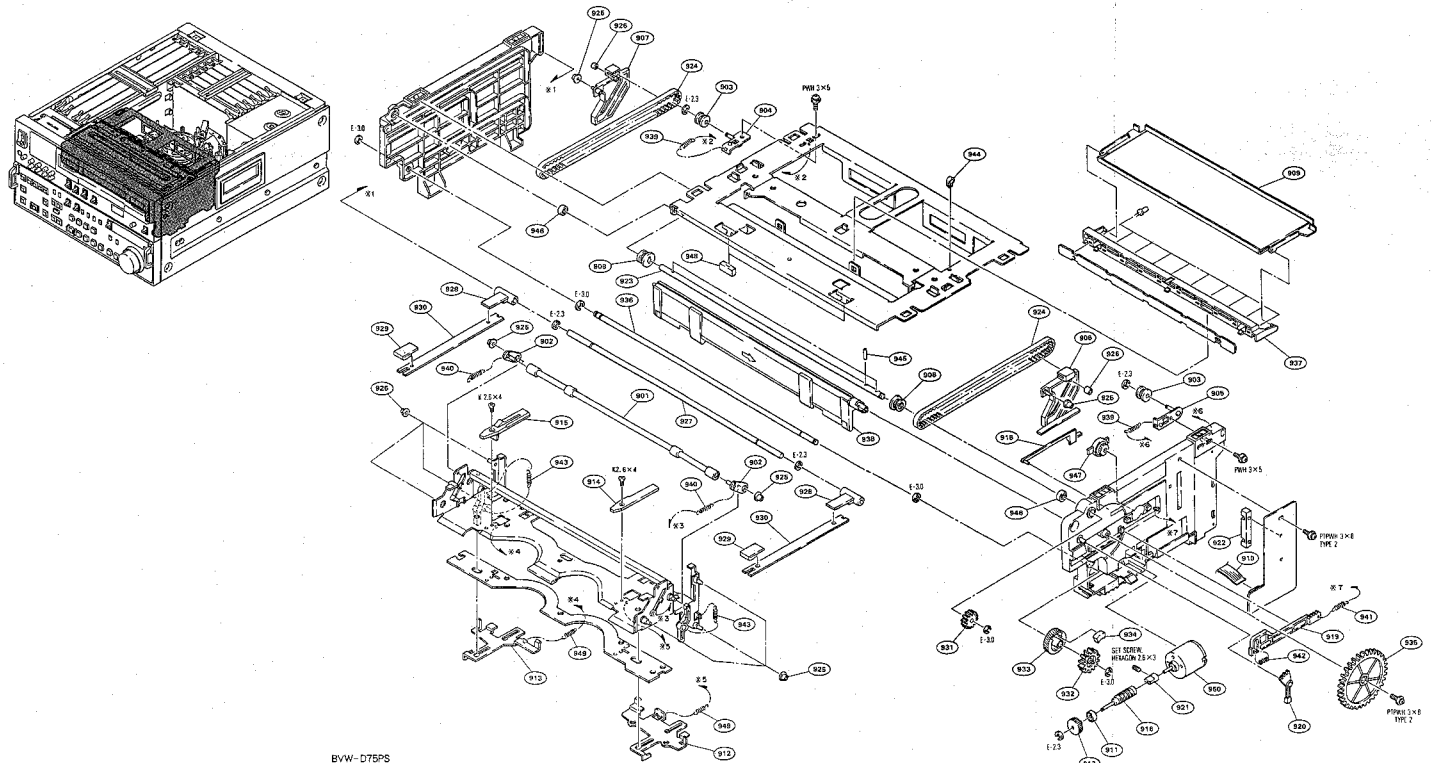
BVW-D75PS

CHASSIS AND ORNAMENTAL PANEL BLOCK

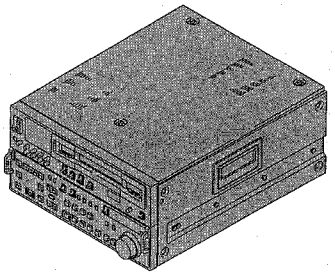

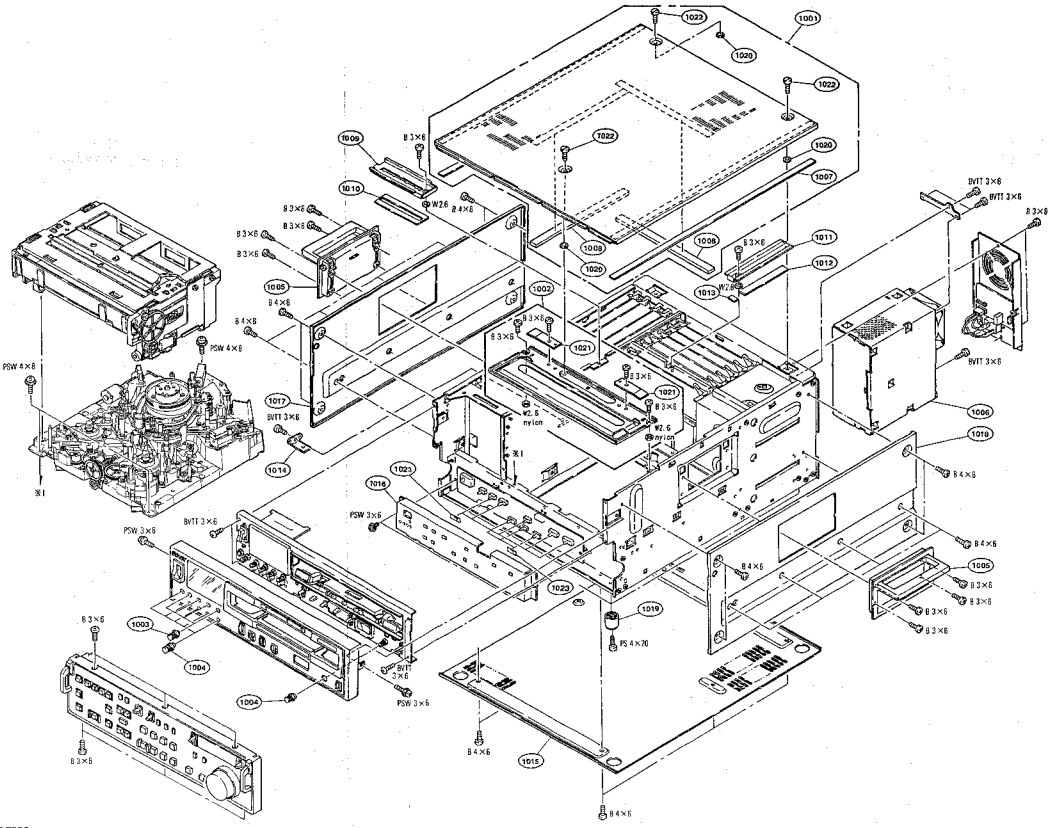

BVW-D75PS

16-24

No.	Part No.	SP	Description
1001	A-6703-720-B	o	LID ASSY, UPPER
1002	A-6771-428-A	s	STAY ASSY, CASSETTE COMPARTMENT
1003	X-3166-670-1	s	KNOB ASSY (R), VOL
1004	X-3166-671-1	s	KNOB ASSY (B), VOL
1005	X-3642-018-0	o	HANDLE ASSY
1006	⚠1-413-675-11	s	REGULATOR, SWITCHING
1007	3-171-368-01	o	CUSHION
1008	3-171-369-01	o	LID (A), UPPER, AIR GUARD
1009	3-171-377-01	o	RETAINER (L), PC BOARD
1010	3-171-408-01	o	RETAINER (L), PC BOARD
1011	3-171-409-01	o	RETAINER (S), PC BOARD
1012	3-171-410-01	o	RETAINER (S), PC BOARD
1013	3-171-411-01	o	RETAINER (RP), PC BOARD
1014	3-171-488-01	o	BRACKET, PLATE, BOTTOM
1015	3-171-535-11	o	PLATE, BOTTOM
1016	3-172-480-11	o	PLATE, ORNAMENTAL, SWC-12
1017	3-172-481-01	o	CABINET (LEFT)
1018	3-172-482-01	o	CABINET (RIGHT)
1019	3-642-656-01	s	FOOT
1020	3-688-102-01	o	SPACER, M4
1021	3-717-306-01	o	SPRING
1022	3-717-392-01	o	SCREW, LID
1023	3-717-394-03	o	PLATE (SMALL), ORNAMENTAL, SW

CARD RACK BLOCK

No.	Part No.	SP	Description
1101	A-6713-459-A	o	MOUNTED CIRCUIT BOARD, AU-145
1102	A-6713-460-A	o	MOUNTED CIRCUIT BOARD, AU-146P
1103	A-6713-461-A	o	MOUNTED CIRCUIT BOARD, AU-147P
1104	A-6713-462-A	o	MOUNTED CIRCUIT BOARD, AFM-8
1105	A-6715-454-A	o	MOUNTED CIRCUIT BOARD, DT-28
1106	A-6717-628-A	o	MOUNTED CIRCUIT BOARD, SS-48DP
1107	A-6717-630-A	o	MOUNTED CIRCUIT BOARD, SWC-12P
1108	A-6727-363-A	o	MOUNTED CIRCUIT BOARD, MDM-5P
1109	A-6727-364-A	o	MOUNTED CIRCUIT BOARD, DIF-11P
1110	A-6727-365-A	o	MOUNTED CIRCUIT BOARD, SIF-17
1111	A-6727-366-A	o	MOUNTED CIRCUIT BOARD, TRC-17P
1112	A-6727-367-A	o	MOUNTED CIRCUIT BOARD, RP-53P
1113	A-6754-366-A	o	MOUNTED CIRCUIT BOARD, MB-394
1114	1-641-371-11	s	PRINTED CIRCUIT BOARD, DUS-359
1115	2-251-622-11	s	LEVER, PC BOARD
1116	3-171-413-01	o	GUARD (M), AIR
1117	3-171-414-01	o	GUARD (SW), AIR
1118	3-171-453-01	o	PLATE (L), SHIELD, CARD
1119	3-171-454-02	o	SHEET (L), CARD
1120	3-171-455-01	o	PLATE (S), SHIELD, CARD
1121	3-171-456-02	o	SHEET (S), CARD
1122	3-171-485-01	o	GUARD, EDGE
1123	3-171-491-01	o	CASE (LID), SHIELD, RP57RE
1124	3-171-525-01	o	GUIDE (L), PCB
1125	3-171-527-01	o	GUIDE (S), PCB
1126	3-172-444-01	o	GUARD, HARNESS
1127	3-172-445-01	o	HOLD (LM), MB
1128	3-172-456-01	o	SHEET, INSULATING
1129	3-172-457-01	o	LABEL (RP), PC BOARD
1130	3-172-458-01	o	LABEL (L), PC BOARD
1131	3-172-459-01	o	LABEL (S), PC BOARD
1132	3-172-460-01	o	LID, UPPER, AU-147 SHIELD CASE
1133	3-172-461-01	o	CASE (LID), RPS3R SHIELD
1134	3-172-467-01	o	CASE (LID), RPS3V SHIELD
1135	3-672-754-01	o	HOLDER, PC BOARD

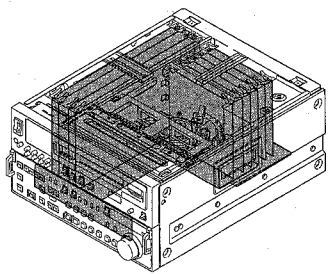

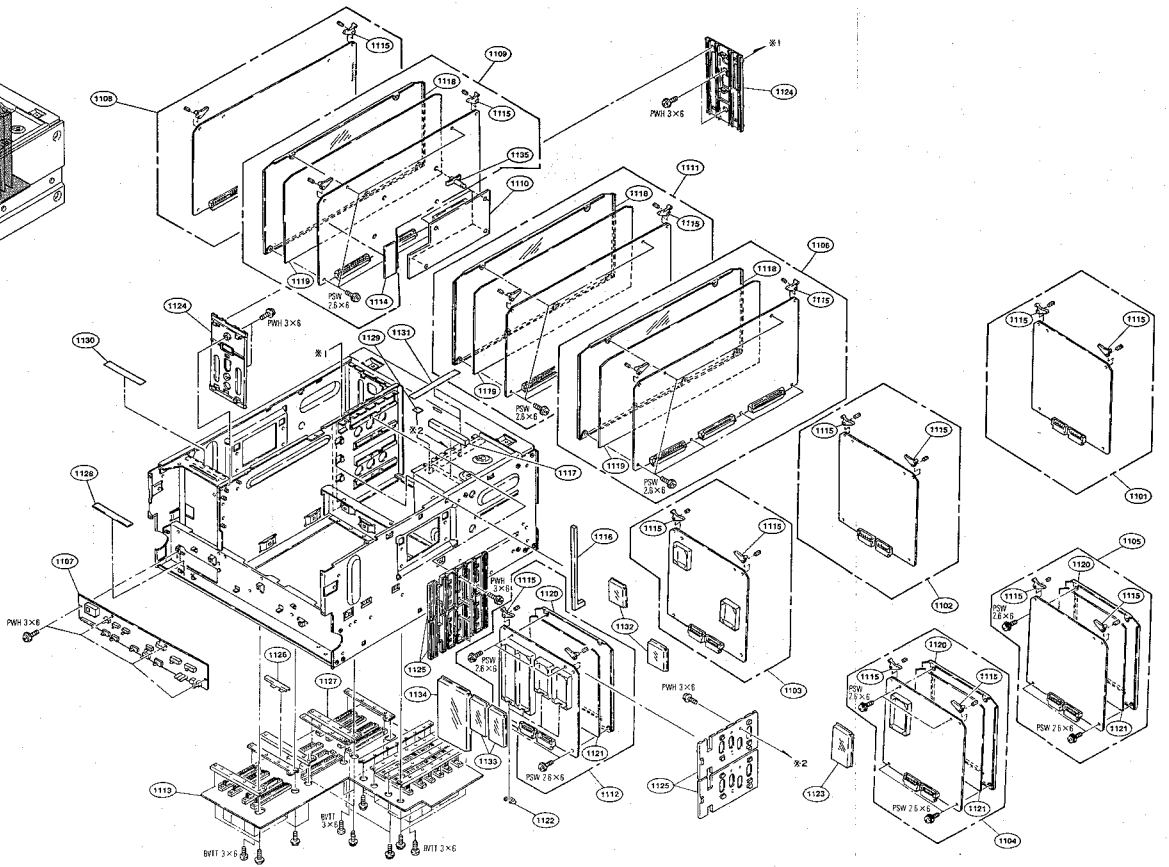

BVW-D75PS

16-27

FRONT PANEL BLOCK

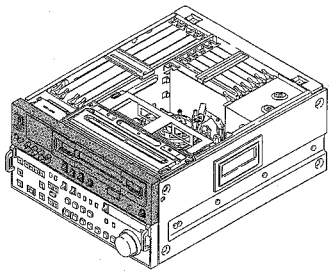

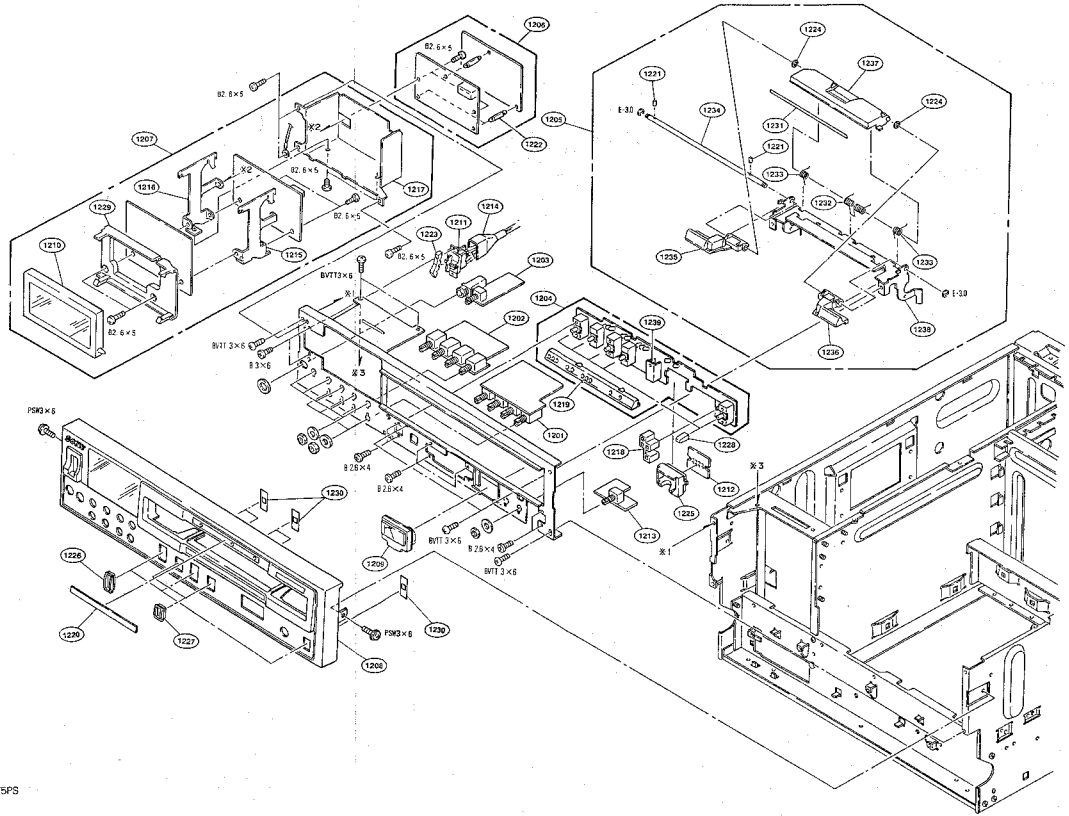

BVW-D75PS

16-28

No.	Part No.	SP	Description
1201	A-6713-463-A	o	MOUNTED CIRCUIT BOARD, VR-111
1202	A-6713-464-A	o	MOUNTED CIRCUIT BOARD, VR-110
1203	A-6713-465-A	o	MOUNTED CIRCUIT BOARD, HP-47
1204	A-6713-632-A	o	MOUNTED CIRCUIT BOARD, SWC-10
1205	A-6751-377-A	o	GUIDE ASSY, SC
1206	A-6759-534-A	o	DP ASSY
1207	A-6759-535-A	o	TUBE SUB ASSY, INDICATION
1208	X-3166-240-1	o	PANEL SUB ASSY, FRONT
1209	1-520-494-21	s	METER, LEVEL(MP)
1210	1-520-496-11	s	METER, (VFD), LEVEL, AUDIO
1211	⚠1-570-117-11	s	SWITCH, ROCKER "POWER"
1212	1-640-671-11	o	PRINTED CIRCUIT BOARD, DP-156
1213	1-640-696-11	o	PRINTED CIRCUIT BOARD, VR-119
1214	2-269-962-00	o	COVER, SWITCH
1215	3-172-434-01	o	BRACKET(R), DP
1216	3-172-435-01	o	BRACKET(L), DP
1217	3-172-463-01	o	CASE, TUBE, INDICATION
1218	3-172-464-01	o	HOLDER(R), LED
1219	3-172-465-01	o	HOLDER, LED
1220	3-172-468-01	o	LABEL, MODEL NUMBER
1221	3-677-193-00	o	PIN, STOPPER
1222	3-682-419-11	o	HOLDER, P.C.B
1223	3-688-814-01	s	CAP, SWITCH
1224	3-701-441-21	s	WASHER, POLY 4MM DIA., 0.50T
1225	3-717-323-02	o	COVER, METER LED
1226	3-717-374-01	o	FRAME (23X12), ORNAMENTAL, SW
1227	3-717-375-01	o	FRAME (18X12), ORNAMENTAL, SW
1228	3-717-382-01	s	KNOB, LEVER SW
1229	3-717-538-03	o	HOLDER, VFD
1230	3-717-613-01	o	PLATE, ORNAMENTAL, LSW
1231	3-717-614-01	o	LABEL, C-LOCK OUT
1232	3-717-615-01	o	SPRING
1233	3-717-616-01	o	SPRING
1234	3-717-617-01	o	SHAFT, SC GUIDE
1235	3-717-618-01	o	GUIDE (LEFT), SC
1236	3-717-619-01	o	GUIDE (RIGHT), SC
1237	3-717-620-01	o	PLATE, OUT, C-LOCK
1238	3-717-621-01	o	PLATE, INDICATION, SC GUIDE
1239	3-717-672-01	o	STOPPER, KY

FUNCTION CONTROL PANEL BLOCK

No.	Part No.	SP	Description
1301	A-6704-263-B	o	PANEL ASS'Y, KEY
1302	A-6717-629-A	o	MOUNTED CIRCUIT BOARD, SWC-11
1303	A-6717-633-A	o	MOUNTED CIRCUIT BOARD, KY-188DP
1304	A-6734-253-A	o	DIAL BLOCK ASSY, SEARCH
1305	X-2124-627-1	o	SHAFT SUB ASSY, MAIN
1306	X-3166-238-1	o	SLIDER (LEFT) ASS'Y
1307	X-3166-239-1	o	SLIDER (RIGHT) ASS'Y
1308	X-3717-253-1	o	RAIL ASS'Y, SLIDE
1309	1-516-961-00	o	SWITCH, LEVER SLIDE
1310	1-516-995-00	s	SWITCH, LEVER SLIDE
1311	1-535-699-11	o	WIRE, JUMPER 23P
1312	1-552-539-00	s	SWITCH, KEY BOARD
1313	1-571-167-11	s	SWITCH, TACTIL
1314	1-571-167-21	s	SWITCH, TACTIL
1315	1-571-167-31	s	SWITCH, TACTIL
1316	1-571-167-41	s	SWITCH, TACTIL
1317	1-571-168-11	s	SWITCH, TACTIL
1318	1-571-168-21	s	SWITCH, TACTIL
1319	1-571-169-11	s	SWITCH, TACTIL
1320	1-571-169-21	s	SWITCH, TACTIL
1321	1-571-280-11	s	SWITCH, TACTIL
1322	1-605-018-00	o	PRINTED CIRCUIT BOARD, PT-9
1323	1-633-548-12	o	PRINTED CIRCUIT BOARD, PTC-39
1324	1-634-411-11	o	PRINTED CIRCUIT BOARD, KY-205
1325	1-634-412-11	o	PRINTED CIRCUIT BOARD, KY-206
1326	1-634-413-11	o	PRINTED CIRCUIT BOARD, DP-136
1327	2-124-690-01	o	GUIDE, LOCK IN
1328	2-124-691-01	s	ROLLER
1329	2-124-692-01	o	SPRING, COMPRESSION
1330	2-124-693-02	s	PLATE
1331	2-124-694-02	o	PLATE, CLUTCH
1332	2-124-695-01	o	PLATE, CUSHION
1333	2-124-696-01	o	PROTECTOR, PTC
1334	2-124-699-02	o	HOLDER, SENSOR
1335	2-143-601-01	s	RING, PG
1336	2-143-602-03	o	CAM, SD
1337	2-143-603-01	o	ARM, RETURN
1338	2-143-604-01	o	GUIDE, LOCK OUT
1339	2-143-613-01	s	SPRING, TORSION
1340	3-172-446-01	o	BRACKET, PT
1341	3-805-651-11	s	RETAINER, LED
1342	3-659-487-00	s	HOLDER, BUZZER
1343	3-659-488-00	s	PIN, BUZZER HOLDER
1344	3-660-978-00	s	SHEET, HEAT RESISTING
1345	3-668-007-02	s	PUSH BUTTON, 5x9(BLACK)
1346	3-668-007-11	s	PUSH BUTTON, 5x9(WHITE)
1347	3-668-008-02	s	PUSH BUTTON (3x5)
1348	3-668-009-02	s	PIN, PUSH BUTTON
1349	3-668-012-00	s	RUBBER, DIAL KNOB
1350	3-668-124-00	o	HOLDER, LED
1351	3-669-904-00	o	HOLDER, PT
1352	3-701-443-21	s	WASHER, POLY 5MM DIA., 0.50T
1353	3-717-370-01	o	KNOB, DIAL
1354	3-717-374-01	o	FRAME(23x12), ORNAMENTAL, SW
1355	3-717-375-01	o	FRAME(18x12), ORNAMENTAL, SW
1356	3-717-377-01	o	FRAME(SQUARE 17), ORNAMENTAL
1357	3-717-378-01	o	FRAME(20x13), ORNAMENTAL, BUTTON
1358	3-717-379-01	o	FRAME(SQUARE 14), ORNAMENTAL
1359	3-717-380-01	o	GUARD, REC
1360	3-717-381-01	s	PUSH BUTTON(15x8)
1361	3-717-382-01	s	KNOB, LEVER, SW
1362	3-717-416-03	o	PROTECTOR, KY
1363	3-717-425-01	o	HANDLE
1364	3-717-557-01	o	PLATE, KNOB
1365	3-717-613-01	o	PLATE ORNAMENTAL, LEVER SW
1366	4-309-349-00	s	SPRING, COIL
1367	X-3166-241-1	o	PANEL ASSY, SUB
1368	X-3166-242-1	o	CHASSIS ASSY, SUB

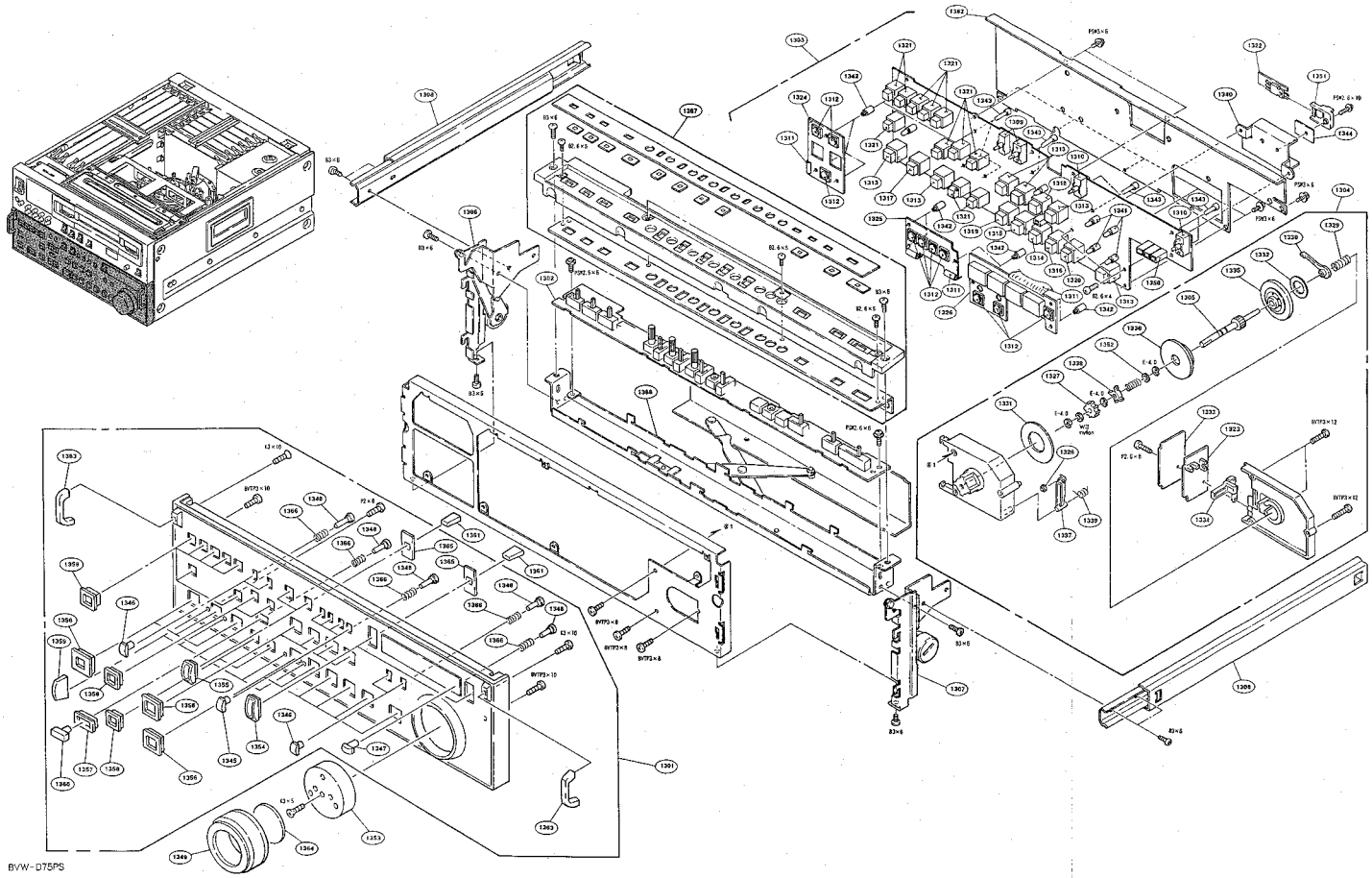

BVW-D75PS

REAR PANEL BLOCK

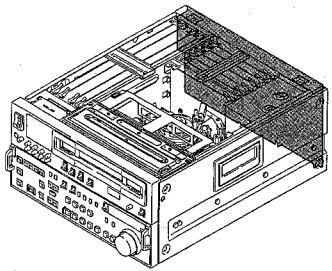

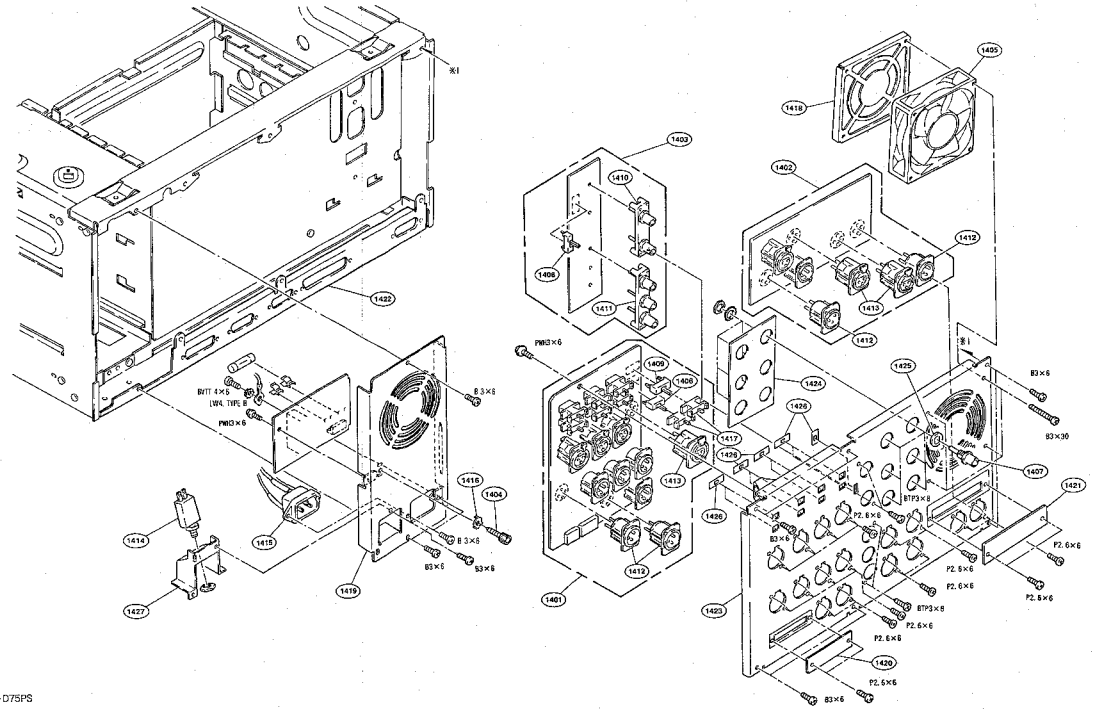

BVW-D75PS

16-32

No.	Part No.	SP	Description
1401	A-6713-466-A	o	MOUNTED CIRCUIT BOARD, CP-175
1402	A-6713-467-A	o	MOUNTED CIRCUIT BOARD, CP-185
1403	A-6727-369-A	o	MOUNTED CIRCUIT BOARD, CP-187
1404	X-2068-004-0	s	TERMINAL ASSY
1405	1-541-431-31	s	FAN, DC
1406	1-554-958-11	s	SWITCH, SLIDE(PC BOARD)
1407	1-569-711-11	s	CONNECTOR, BNC
1408	1-570-157-51	s	SWITCH, SLIDE
1409	1-571-062-11	s	SWITCH, SLIDE
1410	1-573-581-11	s	CONNECTOR, BNC(RECEPTACLE)
1411	1-573-584-11	s	CONNECTOR, BNC(RECEPTACLE)
1412	1-573-593-11	s	CONNECTOR, XLR TYPE 3P
1413	1-573-594-11	s	CONNECTOR, XLR TYPE 3P
1414	⚠1-576-036-11	s	BREAKER, CIRCUIT
1415	⚠1-580-375-21	o	INLET 3P
1416	2-068-008-00	s	WASHER
1417	3-171-450-01	o	ADAPTER, SW
1418	3-171-452-01	o	COVER, FAN
1419	3-171-531-11	o	PANEL, POWER
1420	3-172-447-01	o	PANEL, VOP
1421	3-172-448-01	o	PANEL, OP
1422	3-172-476-01	o	PANEL, D SUB
1423	3-172-477-02	o	PANEL, CONNECTOR
1424	3-173-384-01	o	SPACER, ORNAMENTAL PLATE
1425	3-654-545-00	s	SPACER, BNC
1426	3-717-394-03	o	PLATE(SMALL), ORNAMENTAL
1427	3-727-029-01	o	BRACKET, BREAKER

16-3. ELECTRICAL PARTS LIST

AC-107 BOARD

Ref. No. or Q'ty	Part No.	SP	Description
C1	⚠ 1-136-185-00	s	FILM 0.22uF 20% 250V
C2	⚠ 1-161-741-00	s	CERAMIC 1000PF 20% AC400V
C3	⚠ 1-161-741-00	s	CERAMIC 1000PF 20% AC400V
C4	⚠ 1-161-740-00	s	CERAMIC 470PF 10% 400V
C5	⚠ 1-161-741-00	s	CERAMIC 1000PF 20% AC400V
C6	⚠ 1-161-741-00	s	CERAMIC 1000PF 20% AC400V
C7	⚠ 1-161-740-00	s	CERAMIC 470PF 10% 400V
CN420	⚠ 1-564-674-11	o	CONNECTOR, 8P, MALE
CN421	⚠ 1-564-241-00	o	CONNECTOR, 4P, MALE
R1	⚠ 1-260-135-11	s	CARBON 1M 5% 1/2W

AFM-8 BOARD

Ref. No. or Q'ty	Part No.	SP	Description
1pc	A-6713-452-A	o	MOUNTED CIRCUIT BOARD, AFM-8
1pc	3-171-455-01	o	PLATE (S), SHIELD, CARD
1pc	3-171-456-02	o	SHEET (S), CARD
1pc	7-621-759-45	s	+PSW, 2.6X6
C1	1-164-004-11	s	CERAMIC, CHIP 0.1uF 10% 25V
C2	1-164-004-11	s	CERAMIC, CHIP 0.1uF 10% 25V
C3	1-163-037-11	s	CERAMIC, CHIP 0.022uF 10% 25V
C4	1-163-037-11	s	CERAMIC, CHIP 0.022uF 10% 25V
C5	1-163-809-11	s	CERAMIC, CHIP 0.047uF 10% 25V
C6	1-163-809-11	s	CERAMIC, CHIP 0.047uF 10% 25V
C7	1-163-809-11	s	CERAMIC, CHIP 0.047uF 10% 25V
C8	1-163-809-11	s	CERAMIC, CHIP 0.047uF 10% 25V
C9	1-163-037-11	s	CERAMIC, CHIP 0.022uF 10% 25V
C10	1-163-037-11	s	CERAMIC, CHIP 0.022uF 10% 25V
C11	1-163-109-00	s	CERAMIC, CHIP 47PF 5% 50V
C12	1-163-125-00	s	CERAMIC, CHIP 220PF 5% 50V
C13	1-163-809-11	s	CERAMIC, CHIP 0.047uF 10% 25V
C14	1-163-137-00	s	CERAMIC, CHIP 680PF 5% 50V
C15	1-131-343-00	s	TANTALUM 0.22uF 10% 35V
C16	1-164-232-11	s	CERAMIC 0.01uF 10% 100V
C17	1-163-809-11	s	CERAMIC, CHIP 0.047uF 10% 25V
C18	1-163-809-11	s	CERAMIC, CHIP 0.047uF 10% 25V
C19	1-163-809-11	s	CERAMIC, CHIP 0.047uF 10% 25V
C20	1-163-809-11	s	CERAMIC, CHIP 0.047uF 10% 25V
C21	1-163-809-11	s	CERAMIC, CHIP 0.047uF 10% 25V
C22	1-124-925-11	s	ELECT 2.2uF 20% 100V
C24	1-164-182-11	s	CERAMIC CHIP 3300PF 10% 100V
C26	1-163-037-11	s	CERAMIC, CHIP 0.022uF 10% 25V
C27	1-163-037-11	s	CERAMIC, CHIP 0.022uF 10% 25V
C28	1-163-037-11	s	CERAMIC, CHIP 0.022uF 10% 25V
C29	1-163-037-11	s	CERAMIC, CHIP 0.022uF 10% 25V
C30	1-163-809-11	s	CERAMIC, CHIP 0.047uF 10% 25V
C101	1-124-477-11	s	ELECT 47uF 20% 25V
C102	1-164-161-11	s	CERAMIC, CHIP 0.0022uF 10% 100V
C103	1-163-014-00	s	CERAMIC 0.0027uF 10% 50V
C105	1-163-121-00	s	CERAMIC, CHIP 150PF 5% 50V
C106	1-164-161-11	s	CERAMIC, CHIP 0.0022uF 10% 100V
C107	1-124-903-11	s	ELECT 1uF 20% 50V
C108	1-163-809-11	s	CERAMIC, CHIP 0.047uF 10% 25V
C109	1-123-382-00	s	ELECT 3.3uF 20% 100V
C110	1-163-809-11	s	CERAMIC, CHIP 0.047uF 10% 25V
C111	1-163-135-00	s	CERAMIC, CHIP 560PF 5% 50V
C112	1-163-133-00	s	CERAMIC, CHIP 470PF 5% 50V
C113	1-163-018-00	s	CERAMIC, CHIP 0.0056uF 5% 50V
C114	1-164-232-11	s	CERAMIC 0.01uF 10% 100V
C115	1-124-477-11	s	ELECT 47uF 20% 25V
C116	1-124-477-11	s	ELECT 47uF 20% 25V
C117	1-164-161-11	s	CERAMIC, CHIP 0.0022uF 10% 100V
C118	1-163-014-00	s	CERAMIC 0.0027uF 10% 50V
C119	1-124-927-11	s	ELECT 4.7uF 20% 100V
C120	1-163-121-00	s	CERAMIC, CHIP 150PF 5% 50V
C121	1-164-161-11	s	CERAMIC, CHIP 0.0022uF 10% 100V
C122	1-124-903-11	s	ELECT 1uF 20% 50V
C123	1-163-809-11	s	CERAMIC, CHIP 0.047uF 10% 25V
C124	1-123-382-00	s	ELECT 3.3uF 20% 100V
C125	1-163-809-11	s	CERAMIC, CHIP 0.047uF 10% 25V
C126	1-163-135-00	s	CERAMIC, CHIP 560PF 5% 50V
C127	1-163-133-00	s	CERAMIC, CHIP 470PF 5% 50V
C128	1-163-018-00	s	CERAMIC, CHIP 0.0056uF 5% 50V

(AFM-8 BOARD)

Ref. No. or Q'ty	Part No.	SP	Description
C129	1-164-232-11	s	CERAMIC 0.01uF 10% 100V
C130	1-124-477-11	s	ELECT 47uF 20% 25V
C131	1-131-379-00	s	TANTALUM 22uF 10% 10V
C132	1-131-379-00	s	TANTALUM 22uF 10% 10V
C138	1-163-989-11	s	CERAMIC 0.033uF 10% 25V
C140	1-163-227-11	s	CERAMIC, CHIP 10PF 5% 50V
C142	1-163-105-00	s	CERAMIC, CHIP 33PF 5% 50V
C143	1-124-477-11	s	ELECT 47uF 20% 25V
C144	1-124-477-11	s	ELECT 47uF 20% 25V
C201	1-163-809-11	s	CERAMIC, CHIP 0.047uF 10% 25V
C202	1-163-809-11	s	CERAMIC, CHIP 0.047uF 10% 25V
C204	1-163-109-00	s	CERAMIC, CHIP 47PF 5% 50V
C205	1-163-125-00	s	CERAMIC, CHIP 220PF 5% 50V
C206	1-163-809-11	s	CERAMIC, CHIP 0.047uF 10% 25V
C207	1-163-137-00	s	CERAMIC, CHIP 680PF 5% 50V
C208	1-163-809-11	s	CERAMIC, CHIP 0.047uF 10% 25V
C209	1-131-343-00	s	TANTALUM 0.22uF 10% 35V
C210	1-131-349-00	s	TANTALUM 2.2uF 10% 35V
C211	1-163-809-11	s	CERAMIC, CHIP 0.047uF 10% 25V
C212	1-163-809-11	s	CERAMIC, CHIP 0.047uF 10% 25V
C213	1-124-477-11	s	ELECT 47uF 20% 25V
C214	1-164-161-11	s	CERAMIC, CHIP 0.0022uF 10% 100V
C215	1-163-014-00	s	CERAMIC 0.0027uF 10% 50V
C217	1-163-121-00	s	CERAMIC, CHIP 150PF 5% 50V
C218	1-164-161-11	s	CERAMIC, CHIP 0.0022uF 10% 100V
C219	1-124-903-11	s	ELECT 1uF 20% 50V
C220	1-163-809-11	s	CERAMIC, CHIP 0.047uF 10% 25V
C221	1-123-382-00	s	ELECT 3.3uF 20% 100V
C222	1-163-809-11	s	CERAMIC, CHIP 0.047uF 10% 25V
C223	1-163-135-00	s	CERAMIC, CHIP 560PF 5% 50V
C224	1-163-133-00	s	CERAMIC, CHIP 470PF 5% 50V
C226	1-163-018-00	s	CERAMIC, CHIP 0.0056uF 5% 50V
C226	1-164-232-11	s	CERAMIC 0.01uF 10% 100V
C227	1-124-477-11	s	ELECT 47uF 20% 25V
C228	1-124-477-11	s	ELECT 47uF 20% 25V
C229	1-164-161-11	s	CERAMIC, CHIP 0.0022uF 10% 100V
C230	1-163-014-00	s	CERAMIC 0.0027uF 10% 50V
C231	1-124-927-11	s	ELECT 4.7uF 20% 100V
C232	1-163-121-00	s	CERAMIC, CHIP 150PF 5% 50V
C233	1-164-161-11	s	CERAMIC, CHIP 0.0022uF 10% 100V
C234	1-124-903-11	s	ELECT 1uF 20% 50V
C235	1-163-809-11	s	CERAMIC, CHIP 0.047uF 10% 25V
C236	1-123-382-00	s	ELECT 3.3uF 20% 100V
C237	1-163-809-11	s	CERAMIC, CHIP 0.047uF 10% 25V
C238	1-163-135-00	s	CERAMIC, CHIP 560PF 5% 50V
C239	1-163-133-00	s	CERAMIC, CHIP 470PF 5% 50V
C240	1-163-018-00	s	CERAMIC, CHIP 0.0056uF 5% 50V
C241	1-164-232-11	s	CERAMIC 0.01uF 10% 100V
C242	1-124-477-11	s	ELECT 47uF 20% 25V
C245	1-131-379-00	s	TANTALUM 22uF 10% 10V
C246	1-131-379-00	s	TANTALUM 22uF 10% 10V
C248	1-163-989-11	s	CERAMIC 0.033uF 10% 25V
C252	1-163-227-11	s	CERAMIC, CHIP 10PF 5% 50V
C254	1-163-105-00	s	CERAMIC, CHIP 33PF 5% 50V
C301	1-163-251-11	s	CERAMIC, CHIP 100PF 5% 50V
C302	1-163-125-00	s	CERAMIC, CHIP 220PF 5% 50V
C304	1-163-227-11	s	CERAMIC, CHIP 10PF 5% 50V
C305	1-163-227-11	s	CERAMIC, CHIP 10PF 5% 50V
C306	1-163-989-11	s	CERAMIC 0.033uF 10% 25V

(AFM-8 BOARD)

Ref. No. or Q'ty	Part No.	SP	Description
C307	1-124-927-11	s	ELECT 4.7uF 20% 100V
C308	1-124-927-11	s	ELECT 4.7uF 20% 100V
C350	1-124-907-11	s	ELECT 10uF 20% 50V
C351	1-124-907-11	s	ELECT 10uF 20% 50V
C401	1-124-443-00	s	ELECT 100uF 20% 10V
C402	1-124-443-00	s	ELECT 100uF 20% 10V
C403	1-131-381-00	s	TANTALUM 47uF 10% 10V
C404	1-131-381-00	s	TANTALUM 47uF 10% 10V
C405	1-124-907-11	s	ELECT 10uF 20% 50V
C406	1-124-907-11	s	ELECT 10uF 20% 50V
C407	1-162-587-11	s	CERAMIC, CHIP 0.039uF 10% 25V
C408	1-162-587-11	s	CERAMIC, CHIP 0.039uF 10% 25V
C409	1-163-125-00	s	CERAMIC, CHIP 220PF 5% 50V
C410	1-163-125-00	s	CERAMIC, CHIP 220PF 5% 50V
C411	1-131-381-00	s	TANTALUM 47uF 10% 10V
C412	1-131-381-00	s	TANTALUM 47uF 10% 10V
C413	1-163-088-00	s	CERAMIC, CHIP 5PF 50V
C414	1-163-088-00	s	CERAMIC, CHIP 5PF 50V
C415	1-163-017-00	s	CERAMIC, CHIP 0.0047uF 5% 50V
C416	1-163-017-00	s	CERAMIC, CHIP 0.0047uF 5% 50V
C417	1-163-137-00	s	CERAMIC, CHIP 680PF 5% 50V
C418	1-163-137-00	s	CERAMIC, CHIP 680PF 5% 50V
C419	1-131-376-00	s	TANTALUM 6.8uF 10% 16V
C420	1-163-020-00	s	CERAMIC, CHIP 0.0082uF 10% 50V
C421	1-163-020-00	s	CERAMIC, CHIP 0.0082uF 10% 50V
C422	1-131-376-00	s	TANTALUM 6.8uF 10% 16V
C423	1-131-377-00	s	TANTALUM 10uF 10% 10V
C424	1-131-377-00	s	TANTALUM 10uF 10% 10V
C425	1-131-343-00	s	TANTALUM 0.22uF 10% 35V
C426	1-131-343-00	s	TANTALUM 0.22uF 10% 35V
C427	1-124-443-00	s	ELECT 100uF 20% 10V
C428	1-163-037-11	s	CERAMIC, CHIP 0.022uF 10% 25V
C429	1-124-443-00	s	ELECT 100uF 20% 10V
C430	1-163-037-11	s	CERAMIC, CHIP 0.022uF 10% 25V
C431	1-124-443-00	s	ELECT 100uF 20% 10V
C432	1-163-037-11	s	CERAMIC, CHIP 0.022uF 10% 25V
C433	1-163-251-11	s	CERAMIC, CHIP 100PF 5% 50V
C434	1-163-121-00	s	CERAMIC, CHIP 150PF 5% 50V
C435	1-163-133-00	s	CERAMIC, CHIP 470PF 5% 50V
C436	1-163-263-11	s	CERAMIC, CHIP 330PF 5% 50V
C437	1-163-809-11	s	CERAMIC, CHIP 0.047uF 10% 25V
C438	1-163-809-11	s	CERAMIC, CHIP 0.047uF 10% 25V
C439	1-124-443-00	s	ELECT 100uF 20% 10V
C501	1-163-121-00	s	CERAMIC, CHIP 150PF 5% 50V
C504	1-163-227-11	s	CERAMIC, CHIP 10PF 5% 50V
C505	1-163-227-11	s	CERAMIC, CHIP 10PF 5% 50V
C506	1-163-989-11	s	CERAMIC 0.033uF 10% 25V
C507	1-124-927-11	s	ELECT 4.7uF 20% 100V
C508	1-124-927-11	s	ELECT 4.7uF 20% 100V
C550	1-124-907-11	s	ELECT 10uF 20% 50V
C551	1-124-907-11	s	ELECT 10uF 20% 50V
C601	1-124-477-11	s	ELECT 47uF 20% 25V
C602	1-163-037-11	s	CERAMIC, CHIP 0.022uF 10% 25V
C604	1-163-125-00	s	CERAMIC, CHIP 220PF 5% 50V
C605	1-163-133-00	s	CERAMIC, CHIP 470PF 5% 50V
C606	1-163-125-00	s	CERAMIC, CHIP 220PF 5% 50V
C607	1-163-014-00	s	CERAMIC 0.0027uF 10% 50V
C608	1-130-487-00	s	MYLAR 0.022uF 5% 50V
C609	1-163-275-11	s	CERAMIC, CHIP 0.001uF 5% 50V

(AFM-8 BOARD)

Ref. No. or Q'ty	Part No.	SP	Description
C610	1-163-037-11	s	CERAMIC, CHIP 0.022uF 10% 25V
C611	1-124-477-11	s	ELECT 47uF 20% 25V
C612	1-124-477-11	s	ELECT 47uF 20% 25V
C613	1-163-037-11	s	CERAMIC, CHIP 0.022uF 10% 25V
C615	1-163-125-00	s	CERAMIC, CHIP 220PF 5% 50V
C616	1-163-133-00	s	CERAMIC, CHIP 470PF 5% 50V
C617	1-163-125-00	s	CERAMIC, CHIP 220PF 5% 50V
C618	1-163-014-00	s	CERAMIC 0.0027uF 10% 50V
C619	1-130-487-00	s	MYLAR 0.022uF 5% 50V
C620	1-163-275-11	s	CERAMIC, CHIP 0.001uF 5% 50V
C621	1-163-037-11	s	CERAMIC, CHIP 0.022uF 10% 25V
C622	1-124-477-11	s	ELECT 47uF 20% 25V
C701	1-124-477-11	s	ELECT 47uF 20% 25V
C702	1-124-477-11	s	ELECT 47uF 20% 25V
C703	1-124-907-11	s	ELECT 10uF 20% 50V
C704	1-124-443-00	s	ELECT 100uF 20% 10V
C705	1-124-144-00	s	ELECT 220uF 20% 16V
C706	1-124-144-00	s	ELECT 220uF 20% 16V
C707	1-163-037-11	s	CERAMIC, CHIP 0.022uF 10% 25V
C708	1-163-037-11	s	CERAMIC, CHIP 0.022uF 10% 25V
C709	1-124-477-11	s	ELECT 47uF 20% 25V
C710	1-124-477-11	s	ELECT 47uF 20% 25V
C711	1-163-251-11	s	CERAMIC, CHIP 100PF 5% 50V
C712	1-124-907-11	s	ELECT 10uF 20% 50V
C713	1-124-907-11	s	ELECT 10uF 20% 50V
C714	1-124-903-11	s	ELECT 1uF 20% 50V
C715	1-163-275-11	s	CERAMIC, CHIP 0.001uF 5% 50V
C716	1-124-443-00	s	ELECT 100uF 20% 10V
C717	1-163-037-11	s	CERAMIC, CHIP 0.022uF 10% 25V
C718	1-163-037-11	s	CERAMIC, CHIP 0.022uF 10% 25V
C719	1-163-037-11	s	CERAMIC, CHIP 0.022uF 10% 25V
C720	1-163-275-11	s	CERAMIC, CHIP 0.001uF 5% 50V
C721	1-163-275-11	s	CERAMIC, CHIP 0.001uF 5% 50V
C728	1-163-037-11	s	CERAMIC, CHIP 0.022uF 10% 25V
C752	1-124-144-00	s	ELECT 220uF 20% 16V
C753	1-124-477-11	s	ELECT 47uF 20% 25V
C756	1-124-144-00	s	ELECT 220uF 20% 16V
C757	1-124-477-11	s	ELECT 47uF 20% 25V
C759	1-163-105-11	s	CERAMIC, CHIP 33PF 5% 50V
C761	1-124-907-11	s	ELECT 10uF 20% 50V
C762	1-163-037-11	s	CERAMIC, CHIP 0.022uF 10% 25V
C763	1-124-443-00	s	ELECT 100uF 20% 10V
C766	1-163-037-11	s	CERAMIC, CHIP 0.022uF 10% 25V
C767	1-124-443-00	s	ELECT 100uF 20% 10V
C769	1-124-907-11	s	ELECT 10uF 20% 50V
C770	1-163-037-11	s	CERAMIC, CHIP 0.022uF 10% 25V
C771	1-124-443-00	s	ELECT 100uF 20% 10V
C774	1-163-037-11	s	CERAMIC, CHIP 0.022uF 10% 25V
C775	1-124-443-00	s	ELECT 100uF 20% 10V
C801	1-163-809-11	s	CERAMIC, CHIP 0.047uF 10% 25V
C802	1-163-809-11	s	CERAMIC, CHIP 0.047uF 10% 25V
C803	1-163-037-11	s	CERAMIC, CHIP 0.022uF 10% 25V
C804	1-163-037-11	s	CERAMIC, CHIP 0.022uF 10% 25V
C805	1-163-037-11	s	CERAMIC, CHIP 0.022uF 10% 25V
C807	1-163-809-11	s	CERAMIC, CHIP 0.047uF 10% 25V
C808	1-163-809-11	s	CERAMIC, CHIP 0.047uF 10% 25V
C809	1-163-037-11	s	CERAMIC, CHIP 0.022uF 10% 25V
C810	1-163-037-11	s	CERAMIC, CHIP 0.022uF 10% 25V
C811	1-163-037-11	s	CERAMIC, CHIP 0.022uF 10% 25V

(AFM-8 BOARD)

Ref. No. or Q'ty	Part No.	SP	Description
C815	1-163-809-11	s	CERAMIC, CHIP 0.047uF 10% 25V
C816	1-163-037-11	s	CERAMIC, CHIP 0.022uF 10% 25V
C817	1-163-037-11	s	CERAMIC, CHIP 0.022uF 10% 25V
C818	1-163-037-11	s	CERAMIC, CHIP 0.022uF 10% 25V
C820	1-163-809-11	s	CERAMIC, CHIP 0.047uF 10% 25V
C901	1-163-809-11	s	CERAMIC, CHIP 0.047uF 10% 25V
C902	1-163-809-11	s	CERAMIC, CHIP 0.047uF 10% 25V
C903	1-163-037-11	s	CERAMIC, CHIP 0.022uF 10% 25V
C904	1-163-037-11	s	CERAMIC, CHIP 0.022uF 10% 25V
C905	1-163-037-11	s	CERAMIC, CHIP 0.022uF 10% 25V
C908	1-163-809-11	s	CERAMIC, CHIP 0.047uF 10% 25V
C909	1-163-809-11	s	CERAMIC, CHIP 0.047uF 10% 25V
C910	1-163-037-11	s	CERAMIC, CHIP 0.022uF 10% 25V
C911	1-163-037-11	s	CERAMIC, CHIP 0.022uF 10% 25V
C912	1-163-037-11	s	CERAMIC, CHIP 0.022uF 10% 25V
C917	1-163-037-11	s	CERAMIC, CHIP 0.022uF 10% 25V
C918	1-163-037-11	s	CERAMIC, CHIP 0.022uF 10% 25V
C919	1-163-037-11	s	CERAMIC, CHIP 0.022uF 10% 25V
CN1	1-506-492-11	o	CONNECTOR, 13P, MALE
CN118	1-573-782-21	o	CONNECTOR, PHEC 60P, MALE
CN119	1-573-782-21	o	CONNECTOR, PHEC 60P, MALE
D1	8-719-123-85	s	DIODE 1SS304
D101	8-719-800-78	s	DIODE 1SS226
D102	8-719-800-76	s	DIODE 1SS226
D103	8-719-123-85	s	DIODE 1SS304
D104	8-719-123-85	s	DIODE 1SS304
D105	8-719-800-76	s	DIODE 1SS226
D106	8-719-800-76	s	DIODE 1SS226
D201	8-719-800-76	s	DIODE 1SS226
D202	8-719-800-76	s	DIODE 1SS226
D203	8-719-123-85	s	DIODE 1SS304
D204	8-719-123-85	s	DIODE 1SS304
D301	8-719-123-85	s	DIODE 1SS304
D304	8-719-123-85	s	DIODE 1SS304
D305	8-719-123-85	s	DIODE 1SS304
D501	8-719-123-85	s	DIODE 1SS304
D504	8-719-123-85	s	DIODE 1SS304
D505	8-719-123-85	s	DIODE 1SS304
FL1	1-239-062-11	s	FILTER, LOW-PASS
FL2	1-239-062-11	s	FILTER, LOW-PASS
FL3	1-238-015-11	s	FILTER, BANDPASS 540KHz
FL4	1-238-013-11	s	FILTER, BANDPASS 540KHz
FL5	1-238-012-11	s	FILTER, BANDPASS 310KHz
FL6	1-238-013-11	s	FILTER, BANDPASS 540KHz
FL7	1-238-012-11	s	FILTER, BANDPASS 310KHz
FL101	1-238-003-11	s	FILTER, LOW-PASS
IC1	8-759-403-78	s	IC AN3920K
IC2	8-759-300-71	s	IC HD14053BFP
IC3	8-759-231-32	s	IC TC7S00F
IC4	8-759-231-32	s	IC TC7S00F
IC6	8-759-981-85	s	IC LM2903M
IC7	8-759-908-17	s	IC TL082CPS
IC8	8-759-403-78	s	IC AN3920K
IC101	8-759-403-77	s	IC AN3922NK
IC102	8-759-403-77	s	IC AN3922NK
IC103	8-759-300-71	s	IC HD14053BFP
IC104	8-759-106-02	s	IC UPC4570G2

(AFM-8 BOARD)

Ref. No. or Q'ty	Part No.	SP	Description
IC105	8-759-106-02	s	IC UPC4570G2
IC106	8-759-106-02	s	IC UPC4570G2
IC201	8-759-403-77	s	IC AN3922NK
IC202	8-759-403-77	s	IC AN3922NK
IC203	8-759-300-71	s	IC HD14053BFP
IC301	8-759-106-02	s	IC UPC4570G2
IC302	8-759-106-02	s	IC UPC4570G2
IC303	8-759-982-04	s	IC RC5532M
IC401	8-752-005-90	s	IC CXZ20099
IC502	8-759-106-02	s	IC UPC4570G2
IC503	8-759-982-04	s	IC RC5532M
IC601	8-759-908-17	s	IC TL082CPS
IC701	8-759-009-10	s	IC MC14069UBF
IC702	8-759-009-51	s	IC MC14538BF
IC703	8-759-234-20	s	IC TC7S08F
IC704	8-759-209-54	s	IC TC4S01F
IC705	8-759-008-82	s	IC MC14013BF
IC706	8-759-008-79	s	IC MC14011BF
IC707	8-759-112-06	s	IC UPC78N05H
IC708	8-759-009-51	s	IC MC14538BF
IC712	8-759-009-17	s	IC MC14077BF
IC720	8-759-982-21	s	IC RC78L05A
IC721	8-759-982-21	s	IC RC78L05A
IC722	8-759-982-44	s	IC RC79L05A
IC723	8-759-982-44	s	IC RC79L05A
IC801	8-752-052-73	s	IC CXA1451M
IC802	8-752-052-73	s	IC CXA1451M
IC803	8-752-052-73	s	IC CXA1451M
IC901	8-752-052-73	s	IC CXA1451M
IC902	8-752-052-73	s	IC CXA1451M
IC903	8-752-052-73	s	IC CXA1451M
L101	1-410-116-11	s	INDUCTOR 560UH
L102	1-410-064-11	s	INDUCTOR 2.7mH
L103	1-410-116-11	s	INDUCTOR 560UH
L104	1-410-064-11	s	INDUCTOR 2.7mH
L201	1-410-116-11	s	INDUCTOR 560UH
L202	1-410-064-11	s	INDUCTOR 2.7mH
L203	1-410-116-11	s	INDUCTOR 560UH
L204	1-410-064-11	s	INDUCTOR 2.7mH
L401	1-410-482-31	s	INDUCTOR 100uH
L402	1-410-482-31	s	INDUCTOR 100uH
L403	1-410-116-11	s	INDUCTOR 560UH
L404	1-408-429-00	s	INDUCTOR 470uH
L405	1-410-116-11	s	INDUCTOR 560UH
L406	1-408-429-00	s	INDUCTOR 470uH
L701	1-412-533-11	s	INDUCTOR 47uH
L702	1-412-533-11	s	INDUCTOR 47uH
LV601	1-407-563-00	s	COIL, VAR 1uH
LV602	1-407-563-00	s	COIL, VAR 1uH
Q1	8-729-117-32	s	TRANSISTOR 2SC4177
Q2	8-729-117-32	s	TRANSISTOR 2SC4177
Q5	8-729-209-07	s	TRANSISTOR 2SC4213-B
Q6	8-729-209-07	s	TRANSISTOR 2SC4213-B
Q10	8-729-117-32	s	TRANSISTOR 2SC4177
Q11	8-729-140-63	s	TRANSISTOR 2SA1611-M5M6
Q12	8-729-905-18	s	TRANSISTOR DTC144EU
Q13	8-729-117-32	s	TRANSISTOR 2SC4177

(AFM-8 BOARD)

Ref. No. or Q'ty	Part No.	SP	Description
Q14	8-729-140-63	s	TRANSISTOR 2SA1611-M5M6
Q15	8-729-905-12	s	TRANSISTOR DTA144EU
Q16	8-729-117-32	s	TRANSISTOR 2SC4177
Q17	8-729-140-63	s	TRANSISTOR 2SA1611-M5M6
Q19	8-729-905-12	s	TRANSISTOR DTA144EU
Q20	8-729-117-32	s	TRANSISTOR 2SC4177
Q101	8-729-905-18	s	TRANSISTOR DTC144EU
Q102	8-729-140-63	s	TRANSISTOR 2SA1611-M5M6
Q103	8-729-205-38	s	TRANSISTOR 2SK208-Y
Q104	8-729-203-30	s	TRANSISTOR 2SJ106-Y
Q105	8-729-117-32	s	TRANSISTOR 2SC4177
Q201	8-729-905-18	s	TRANSISTOR DTC144EU
Q202	8-729-140-63	s	TRANSISTOR 2SA1611-M5M6
Q203	8-729-205-38	s	TRANSISTOR 2SK208-Y
Q204	8-729-203-30	s	TRANSISTOR 2SJ106-Y
Q301	8-729-209-07	s	TRANSISTOR 2SC4213-B
Q305	8-729-205-38	s	TRANSISTOR 2SK208-Y
Q306	8-729-203-30	s	TRANSISTOR 2SJ106-Y
Q307	8-729-140-63	s	TRANSISTOR 2SA1611-M5M6
Q308	8-729-905-18	s	TRANSISTOR DTC144EU
Q309	8-729-209-07	s	TRANSISTOR 2SC4213-B
Q401	8-729-117-32	s	TRANSISTOR 2SC4177
Q402	8-729-117-32	s	TRANSISTOR 2SC4177
Q403	8-729-117-32	s	TRANSISTOR 2SC4177
Q404	8-729-209-07	s	TRANSISTOR 2SC4213-B
Q405	8-729-117-32	s	TRANSISTOR 2SC4177
Q501	8-729-209-07	s	TRANSISTOR 2SC4213-B
Q505	8-729-205-38	s	TRANSISTOR 2SK208-Y
Q506	8-729-203-30	s	TRANSISTOR 2SJ106-Y
Q507	8-729-140-63	s	TRANSISTOR 2SA1611-M5M6
Q508	8-729-905-18	s	TRANSISTOR DTC144EU
Q509	8-729-209-07	s	TRANSISTOR 2SC4213-B
Q601	8-729-119-76	s	TRANSISTOR 2SA1115P
Q602	8-729-378-84	s	TRANSISTOR 2SD788
Q603	8-729-378-84	s	TRANSISTOR 2SD788
Q604	8-729-205-83	s	TRANSISTOR 2SC2458L-GR
Q605	8-729-119-76	s	TRANSISTOR 2SA1115P
Q606	8-729-378-84	s	TRANSISTOR 2SD788
Q607	8-729-378-84	s	TRANSISTOR 2SD788
Q608	8-729-205-83	s	TRANSISTOR 2SC2458L-GR
Q702	8-729-106-68	s	TRANSISTOR 2SC1615A-GP
Q703	8-729-106-60	s	TRANSISTOR 2SB1115A
Q704	8-729-106-68	s	TRANSISTOR 2SC1615A-GP
Q705	8-729-106-60	s	TRANSISTOR 2SB1115A
Q801	8-729-117-32	s	TRANSISTOR 2SC4177
Q802	8-729-117-32	s	TRANSISTOR 2SC4177
R1	1-216-025-00	s	METAL, CHIP 100 5% 1/10W
R2	1-216-025-00	s	METAL, CHIP 100 5% 1/10W
R3	1-216-049-00	s	METAL, CHIP 1K 5% 1/10W
R4	1-216-651-11	s	METAL, CHIP 1K 0.5% 1/10W
R5	1-216-049-00	s	METAL, CHIP 1K 5% 1/10W
R6	1-216-651-11	s	METAL, CHIP 1K 0.5% 1/10W
R7	1-216-651-11	s	METAL, CHIP 1K 0.5% 1/10W
R8	1-216-651-11	s	METAL, CHIP 1K 0.5% 1/10W
R11	1-216-651-11	s	METAL, CHIP 1K 0.5% 1/10W
R12	1-216-651-11	s	METAL, CHIP 1K 0.5% 1/10W
R13	1-216-081-00	s	METAL, CHIP 22K 5% 1/10W
R14	1-216-081-00	s	METAL, CHIP 22K 5% 1/10W

(AFM-8 BOARD)

Ref. No. or Q'ty	Part No.	SP	Description
R15	1-216-081-00	s	METAL, CHIP 22K 5% 1/10W
R16	1-216-081-00	s	METAL, CHIP 22K 5% 1/10W
R17	1-216-675-11	s	METAL, CHIP 10K 0.5% 1/10W
R18	1-216-675-11	s	METAL, CHIP 10K 0.5% 1/10W
R20	1-216-097-00	s	METAL, CHIP 100K 5% 1/10W
R21	1-216-049-00	s	METAL, CHIP 1K 5% 1/10W
R23	1-216-657-11	s	METAL, CHIP 1.8K 0.5% 1/10W
R24	1-216-679-11	s	METAL, CHIP 15K 0.5% 1/10W
R25	1-216-657-11	s	METAL, CHIP 1.8K 0.5% 1/10W
R26	1-216-685-11	s	METAL, CHIP 27K 0.5% 1/10W
R27	1-216-049-00	s	METAL, CHIP 1K 5% 1/10W
R28	1-216-657-11	s	METAL, CHIP 1.8K 0.5% 1/10W
R29	1-216-657-11	s	METAL, CHIP 1.8K 0.5% 1/10W
R30	1-216-657-11	s	METAL, CHIP 1.8K 0.5% 1/10W
R31	1-216-097-00	s	METAL, CHIP 100K 5% 1/10W
R33	1-216-657-11	s	METAL, CHIP 1.8K 0.5% 1/10W
R35	1-216-097-00	s	METAL, CHIP 100K 5% 1/10W
R38	1-216-089-00	s	METAL, CHIP 47K 5% 1/10W
R39	1-216-041-00	s	METAL, CHIP 470 5% 1/10W
R41	1-216-077-00	s	METAL, CHIP 15K 5% 1/10W
R42	1-216-089-00	s	METAL, CHIP 47K 5% 1/10W
R49	1-216-089-00	s	METAL, CHIP 47K 5% 1/10W
R54	1-216-055-00	s	METAL, CHIP 1.8K 5% 1/10W
R55	1-216-662-11	s	METAL, CHIP 3K 0.5% 1/10W
R56	1-216-675-11	s	METAL, CHIP 10K 0.5% 1/10W
R57	1-216-057-00	s	METAL, CHIP 2.2K 5% 1/10W
R58	1-216-049-00	s	METAL, CHIP 1K 5% 1/10W
R59	1-216-029-00	s	METAL, CHIP 22 5% 1/10W
R60	1-216-055-00	s	METAL, CHIP 1.8K 5% 1/10W
R61	1-216-662-11	s	METAL, CHIP 3K 0.5% 1/10W
R62	1-216-675-11	s	METAL, CHIP 10K 0.5% 1/10W
R63	1-216-057-00	s	METAL, CHIP 2.2K 5% 1/10W
R64	1-216-049-00	s	METAL, CHIP 1K 5% 1/10W
R65	1-216-029-00	s	METAL, CHIP 22 5% 1/10W
R66	1-216-683-11	s	METAL, CHIP 22K 0.5% 1/10W
R67	1-216-687-11	s	METAL, CHIP 33K 0.5% 1/10W
R68	1-216-685-11	s	METAL, CHIP 27K 0.5% 1/10W
R69	1-216-073-00	s	METAL, CHIP 10K 5% 1/10W
R70	1-216-097-00	s	METAL, CHIP 100K 5% 1/10W
R71	1-216-057-00	s	METAL, CHIP 2.2K 5% 1/10W
R72	1-216-689-11	s	METAL, CHIP 39K 0.5% 1/10W
R73	1-216-687-11	s	METAL, CHIP 33K 0.5% 1/10W
R74	1-216-057-00	s	METAL, CHIP 2.2K 5% 1/10W
R75	1-216-089-00	s	METAL, CHIP 47K 5% 1/10W
R100	1-216-644-11	s	METAL, CHIP 510 0.5% 1/10W
R101	1-216-649-11	s	METAL, CHIP 820 0.5% 1/10W
R102	1-216-641-11	s	METAL, CHIP 390 0.5% 1/10W
R103	1-216-092-00	s	METAL 62K 5% 1/10W
R105	1-216-025-00	s	METAL, CHIP 100 5% 1/10W
R106	1-216-675-11	s	METAL, CHIP 10K 0.5% 1/10W
R107	1-216-075-00	s	METAL, CHIP 12K 5% 1/10W
R108	1-216-691-11	s	METAL, CHIP 47K 0.5% 1/10W
R109	1-216-057-00	s	METAL, CHIP 2.2K 5% 1/10W
R110	1-216-659-11	s	METAL, CHIP 2.2K 0.5% 1/10W
R111	1-216-105-00	s	METAL, CHIP 220K 5% 1/10W
R112	1-216-649-11	s	METAL, CHIP 820 0.5% 1/10W
R113	1-216-641-11	s	METAL, CHIP 390 0.5% 1/10W
R114	1-216-092-00	s	METAL 62K 5% 1/10W
R115	1-216-105-00	s	METAL, CHIP 220K 5% 1/10W

(AFM-8 BOARD)

Ref. No. or Q'ty	Part No.	SP	Description
R116	1-216-644-11	s	METAL, CHIP 510 0.5% 1/10W
R117	1-216-025-00	s	METAL, CHIP 100 5% 1/10W
R118	1-216-675-11	s	METAL, CHIP 10K 0.5% 1/10W
R119	1-216-075-00	s	METAL, CHIP 12K 5% 1/10W
R120	1-216-691-11	s	METAL, CHIP 47K 0.5% 1/10W
R121	1-216-057-00	s	METAL, CHIP 2.2K 5% 1/10W
R122	1-216-659-11	s	METAL, CHIP 2.2K 0.5% 1/10W
R123	1-216-105-00	s	METAL, CHIP 220K 5% 1/10W
R124	1-216-655-11	s	METAL, CHIP 1.5K 0.5% 1/10W
R125	1-216-655-11	s	METAL, CHIP 1.5K 0.5% 1/10W
R126	1-216-089-00	s	METAL, CHIP 47K 5% 1/10W
R127	1-216-065-00	s	METAL, CHIP 4.7K 5% 1/10W
R128	1-216-089-00	s	METAL, CHIP 47K 5% 1/10W
R129	1-216-683-11	s	METAL, CHIP 22K 0.5% 1/10W
R131	1-216-675-11	s	METAL, CHIP 10K 0.5% 1/10W
R132	1-216-683-11	s	METAL, CHIP 22K 0.5% 1/10W
R133	1-216-121-00	s	METAL, CHIP 1M 5% 1/10W
R134	1-216-121-00	s	METAL, CHIP 1M 5% 1/10W
R135	1-216-121-00	s	METAL, CHIP 1M 5% 1/10W
R136	1-216-121-00	s	METAL, CHIP 1M 5% 1/10W
R137	1-216-085-00	s	METAL, CHIP 33K 5% 1/10W
R140	1-216-667-11	s	METAL, CHIP 4.7K 0.5% 1/10W
R141	1-216-073-00	s	METAL, CHIP 10K 5% 1/10W
R142	1-216-667-11	s	METAL, CHIP 4.7K 0.5% 1/10W
R143	1-216-667-11	s	METAL, CHIP 4.7K 0.5% 1/10W
R144	1-216-669-11	s	METAL, CHIP 5.6K 0.5% 1/10W
R145	1-216-677-11	s	METAL, CHIP 12K 0.5% 1/10W
R147	1-216-667-11	s	METAL, CHIP 4.7K 0.5% 1/10W
R148	1-216-691-11	s	METAL, CHIP 47K 0.5% 1/10W
R149	1-216-691-11	s	METAL, CHIP 47K 0.5% 1/10W
R150	1-216-073-00	s	METAL, CHIP 10K 5% 1/10W
R201	1-216-049-00	s	METAL, CHIP 1K 5% 1/10W
R205	1-216-679-11	s	METAL, CHIP 15K 0.5% 1/10W
R207	1-216-013-00	s	METAL, CHIP 33 5% 1/10W
R208	1-216-685-11	s	METAL, CHIP 27K 0.5% 1/10W
R209	1-216-013-00	s	METAL, CHIP 33 5% 1/10W
R210	1-216-657-11	s	METAL, CHIP 1.8K 0.5% 1/10W
R211	1-216-657-11	s	METAL, CHIP 1.8K 0.5% 1/10W
R212	1-216-657-11	s	METAL, CHIP 1.8K 0.5% 1/10W
R213	1-216-657-11	s	METAL, CHIP 1.8K 0.5% 1/10W
R214	1-216-649-11	s	METAL, CHIP 820 0.5% 1/10W
R215	1-216-641-11	s	METAL, CHIP 390 0.5% 1/10W
R216	1-216-699-11	s	METAL, CHIP 100K 0.5% 1/10W
R218	1-216-025-00	s	METAL, CHIP 100 5% 1/10W
R219	1-216-669-11	s	METAL, CHIP 5.6K 0.5% 1/10W
R220	1-216-075-00	s	METAL, CHIP 12K 5% 1/10W
R221	1-216-691-11	s	METAL, CHIP 47K 0.5% 1/10W
R222	1-216-057-00	s	METAL, CHIP 2.2K 5% 1/10W
R223	1-216-659-11	s	METAL, CHIP 2.2K 0.5% 1/10W
R224	1-216-105-00	s	METAL, CHIP 220K 5% 1/10W
R225	1-216-649-11	s	METAL, CHIP 820 0.5% 1/10W
R226	1-216-641-11	s	METAL, CHIP 390 0.5% 1/10W
R227	1-216-699-11	s	METAL, CHIP 100K 0.5% 1/10W
R228	1-216-105-00	s	METAL, CHIP 220K 5% 1/10W
R230	1-216-025-00	s	METAL, CHIP 100 5% 1/10W
R231	1-216-669-11	s	METAL, CHIP 5.6K 0.5% 1/10W
R232	1-216-075-00	s	METAL, CHIP 12K 5% 1/10W
R233	1-216-691-11	s	METAL, CHIP 47K 0.5% 1/10W
R234	1-216-057-00	s	METAL, CHIP 2.2K 5% 1/10W

(APM-8 BOARD)

Ref. No. or Q'ty	Part No.	SP	Description
R235	1-216-659-11	s	METAL, CHIP 2.2K 0.5% 1/10W
R236	1-216-105-00	s	METAL, CHIP 220K 5% 1/10W
R237	1-216-089-00	s	METAL, CHIP 47K 5% 1/10W
R238	1-216-065-00	s	METAL, CHIP 4.7K 5% 1/10W
R239	1-216-655-11	s	METAL, CHIP 1.5K 0.5% 1/10W
R240	1-216-655-11	s	METAL, CHIP 1.5K 0.5% 1/10W
R241	1-216-089-00	s	METAL, CHIP 47K 5% 1/10W
R243	1-216-121-00	s	METAL, CHIP 1M 5% 1/10W
R244	1-216-121-00	s	METAL, CHIP 1M 5% 1/10W
R245	1-216-683-11	s	METAL, CHIP 22K 0.5% 1/10W
R246	1-216-121-00	s	METAL, CHIP 1M 5% 1/10W
R247	1-216-121-00	s	METAL, CHIP 1M 5% 1/10W
R248	1-216-683-11	s	METAL, CHIP 22K 0.5% 1/10W
R249	1-216-085-00	s	METAL, CHIP 33K 5% 1/10W
R250	1-216-675-11	s	METAL, CHIP 10K 0.5% 1/10W
R253	1-216-667-11	s	METAL, CHIP 4.7K 0.5% 1/10W
R254	1-216-073-00	s	METAL, CHIP 10K 5% 1/10W
R255	1-216-667-11	s	METAL, CHIP 4.7K 0.5% 1/10W
R256	1-216-667-11	s	METAL, CHIP 4.7K 0.5% 1/10W
R258	1-216-659-11	s	METAL, CHIP 5.6K 0.5% 1/10W
R259	1-216-677-11	s	METAL, CHIP 12K 0.5% 1/10W
R260	1-216-073-00	s	METAL, CHIP 10K 5% 1/10W
R261	1-216-691-11	s	METAL, CHIP 47K 0.5% 1/10W
R262	1-216-685-11	s	METAL, CHIP 27K 0.5% 1/10W
R263	1-216-676-11	s	METAL, CHIP 11K 0.5% 1/10W
R264	1-216-645-11	s	METAL, CHIP 560 0.5% 1/10W
R265	1-216-675-11	s	METAL, CHIP 10K 0.5% 1/10W
R266	1-216-638-11	s	METAL, CHIP 300 0.5% 1/10W
R267	1-216-666-11	s	METAL, CHIP 4.3K 0.5% 1/10W
R301	1-216-659-11	s	METAL, CHIP 2.2K 0.5% 1/10W
R302	1-216-659-11	s	METAL, CHIP 2.2K 0.5% 1/10W
R304	1-216-675-11	s	METAL, CHIP 10K 0.5% 1/10W
R305	1-216-065-00	s	METAL, CHIP 4.7K 5% 1/10W
R306	1-216-675-11	s	METAL, CHIP 10K 0.5% 1/10W
R307	1-216-675-11	s	METAL, CHIP 10K 0.5% 1/10W
R308	1-216-663-11	s	METAL, CHIP 3.3K 0.5% 1/10W
R309	1-216-675-11	s	METAL, CHIP 10K 0.5% 1/10W
R310	1-216-663-11	s	METAL, CHIP 3.3K 0.5% 1/10W
R311	1-216-687-11	s	METAL, CHIP 33K 0.5% 1/10W
R312	1-216-687-11	s	METAL, CHIP 33K 0.5% 1/10W
R313	1-216-675-11	s	METAL, CHIP 10K 0.5% 1/10W
R314	1-216-692-11	s	METAL, CHIP 51K 0.5% 1/10W
R315	1-216-675-11	s	METAL, CHIP 10K 0.5% 1/10W
R316	1-216-675-11	s	METAL, CHIP 10K 0.5% 1/10W
R318	1-216-085-00	s	METAL, CHIP 33K 5% 1/10W
R319	1-216-121-00	s	METAL, CHIP 1M 5% 1/10W
R320	1-216-121-00	s	METAL, CHIP 1M 5% 1/10W
R321	1-216-121-00	s	METAL, CHIP 1M 5% 1/10W
R322	1-216-121-00	s	METAL, CHIP 1M 5% 1/10W
R323	1-216-089-00	s	METAL, CHIP 47K 5% 1/10W
R324	1-216-065-00	s	METAL, CHIP 4.7K 5% 1/10W
R325	1-216-089-00	s	METAL, CHIP 47K 5% 1/10W
R329	1-216-065-00	s	METAL, CHIP 4.7K 5% 1/10W
R330	1-216-675-11	s	METAL, CHIP 10K 0.5% 1/10W
R331	1-216-682-11	s	METAL, CHIP 20K 0.5% 1/10W
R350	1-216-049-00	s	METAL, CHIP 1K 5% 1/10W
R351	1-216-081-00	s	METAL, CHIP 22K 5% 1/10W
R352	1-216-081-00	s	METAL, CHIP 22K 5% 1/10W
R401	1-216-675-11	s	METAL, CHIP 10K 0.5% 1/10W

(APM-8 BOARD)

Ref. No. or Q'ty	Part No.	SP	Description
R402	1-216-675-11	s	METAL, CHIP 10K 0.5% 1/10W
R403	1-216-663-11	s	METAL, CHIP 3.3K 0.5% 1/10W
R404	1-216-663-11	s	METAL, CHIP 3.3K 0.5% 1/10W
R405	1-216-619-11	s	METAL, CHIP 47 0.5% 1/10W
R406	1-216-619-11	s	METAL, CHIP 47 0.5% 1/10W
R407	1-216-675-11	s	METAL, CHIP 10K 0.5% 1/10W
R408	1-216-675-11	s	METAL, CHIP 10K 0.5% 1/10W
R409	1-216-661-11	s	METAL, CHIP 2.7K 0.5% 1/10W
R410	1-216-661-11	s	METAL, CHIP 2.7K 0.5% 1/10W
R411	1-216-659-11	s	METAL, CHIP 2.2K 0.5% 1/10W
R412	1-216-659-11	s	METAL, CHIP 2.2K 0.5% 1/10W
R413	1-216-647-11	s	METAL, CHIP 680 0.5% 1/10W
R414	1-216-647-11	s	METAL, CHIP 680 0.5% 1/10W
R415	1-216-665-11	s	METAL, CHIP 3.9K 0.5% 1/10W
R416	1-216-665-11	s	METAL, CHIP 3.9K 0.5% 1/10W
R417	1-216-677-11	s	METAL, CHIP 12K 0.5% 1/10W
R418	1-216-677-11	s	METAL, CHIP 12K 0.5% 1/10W
R419	1-216-669-11	s	METAL, CHIP 5.6K 0.5% 1/10W
R420	1-216-667-11	s	METAL, CHIP 4.7K 0.5% 1/10W
R421	1-216-663-11	s	METAL, CHIP 3.3K 0.5% 1/10W
R422	1-216-661-11	s	METAL, CHIP 2.7K 0.5% 1/10W
R423	1-216-661-11	s	METAL, CHIP 2.7K 0.5% 1/10W
R424	1-216-663-11	s	METAL, CHIP 3.3K 0.5% 1/10W
R425	1-216-663-11	s	METAL, CHIP 3.3K 0.5% 1/10W
R426	1-216-663-11	s	METAL, CHIP 3.3K 0.5% 1/10W
R427	1-216-653-11	s	METAL, CHIP 1.2K 0.5% 1/10W
R428	1-216-653-11	s	METAL, CHIP 1.2K 0.5% 1/10W
R429	1-216-049-00	s	METAL, CHIP 1K 5% 1/10W
R430	1-216-081-00	s	METAL, CHIP 22K 5% 1/10W
R431	1-216-049-00	s	METAL, CHIP 1K 5% 1/10W
R432	1-216-065-00	s	METAL, CHIP 4.7K 5% 1/10W
R433	1-216-653-11	s	METAL, CHIP 1.2K 0.5% 1/10W
R434	1-216-657-11	s	METAL, CHIP 1.8K 0.5% 1/10W
R435	1-216-081-00	s	METAL, CHIP 22K 5% 1/10W
R436	1-216-081-00	s	METAL, CHIP 22K 5% 1/10W
R437	1-216-635-11	s	METAL, CHIP 220 0.5% 1/10W
R439	1-216-620-11	s	METAL, CHIP 51 0.5% 1/10W
R440	1-216-691-11	s	METAL, CHIP 47K 0.5% 1/10W
R441	1-216-663-11	s	METAL, CHIP 3.3K 0.5% 1/10W
R442	1-216-081-00	s	METAL, CHIP 22K 5% 1/10W
R443	1-216-049-00	s	METAL, CHIP 1K 5% 1/10W
R501	1-216-659-11	s	METAL, CHIP 2.2K 0.5% 1/10W
R502	1-216-659-11	s	METAL, CHIP 2.2K 0.5% 1/10W
R504	1-216-675-11	s	METAL, CHIP 10K 0.5% 1/10W
R505	1-216-065-00	s	METAL, CHIP 4.7K 5% 1/10W
R506	1-216-675-11	s	METAL, CHIP 10K 0.5% 1/10W
R507	1-216-675-11	s	METAL, CHIP 10K 0.5% 1/10W
R508	1-216-663-11	s	METAL, CHIP 3.3K 0.5% 1/10W
R509	1-216-675-11	s	METAL, CHIP 10K 0.5% 1/10W
R510	1-216-663-11	s	METAL, CHIP 3.3K 0.5% 1/10W
R511	1-216-687-11	s	METAL, CHIP 33K 0.5% 1/10W
R512	1-216-687-11	s	METAL, CHIP 33K 0.5% 1/10W
R513	1-216-675-11	s	METAL, CHIP 10K 0.5% 1/10W
R514	1-216-692-11	s	METAL, CHIP 51K 0.5% 1/10W
R515	1-216-675-11	s	METAL, CHIP 10K 0.5% 1/10W
R516	1-216-675-11	s	METAL, CHIP 10K 0.5% 1/10W
R518	1-216-085-00	s	METAL, CHIP 33K 5% 1/10W
R519	1-216-121-00	s	METAL, CHIP 1M 5% 1/10W
R520	1-216-121-00	s	METAL, CHIP 1M 5% 1/10W

(AFM-8 BOARD)

Ref. No. or Q'ty	Part No.	SP	Description
R521	1-216-121-00	s	METAL, CHIP 1M 5% 1/10W
R522	1-216-121-00	s	METAL, CHIP 1M 5% 1/10W
R523	1-216-089-00	s	METAL, CHIP 47K 5% 1/10W
R524	1-216-065-00	s	METAL, CHIP 4.7K 5% 1/10W
R525	1-216-089-00	s	METAL, CHIP 47K 5% 1/10W
R529	1-216-065-00	s	METAL, CHIP 4.7K 5% 1/10W
R530	1-216-675-11	s	METAL, CHIP 10K 0.5% 1/10W
R531	1-216-682-11	s	METAL, CHIP 20K 0.5% 1/10W
R550	1-216-049-00	s	METAL, CHIP 1K 5% 1/10W
R551	1-216-081-00	s	METAL, CHIP 22K 5% 1/10W
R552	1-216-081-00	s	METAL, CHIP 22K 5% 1/10W
R601	1-216-073-00	s	METAL, CHIP 10K 5% 1/10W
R602	1-216-081-00	s	METAL, CHIP 22K 5% 1/10W
R603	1-249-402-11	s	CARBON 56 5% 1/4W
R604	1-249-423-11	s	CARBON 3.3K 5% 1/4W
R605	1-249-423-11	s	CARBON 3.3K 5% 1/4W
R606	1-216-073-00	s	METAL, CHIP 10K 5% 1/10W
R607	1-249-417-11	s	CARBON 1K 5% 1/4W
R608	1-216-664-11	s	METAL, CHIP 3.6K 0.5% 1/10W
R609	1-216-121-00	s	METAL, CHIP 1M 5% 1/10W
R610	1-216-669-11	s	METAL, CHIP 5.6K 0.5% 1/10W
R611	1-249-402-11	s	CARBON 56 5% 1/4W
R612	1-216-659-11	s	METAL, CHIP 2.2K 0.5% 1/10W
R613	1-215-393-00	s	METAL 68 1% 1/6W
R614	1-216-077-00	s	METAL, CHIP 15K 5% 1/10W
R615	1-249-423-11	s	CARBON 3.3K 5% 1/4W
R616	1-216-073-00	s	METAL, CHIP 10K 5% 1/10W
R617	1-216-081-00	s	METAL, CHIP 22K 5% 1/10W
R618	1-249-402-11	s	CARBON 56 5% 1/4W
R619	1-249-423-11	s	CARBON 3.3K 5% 1/4W
R620	1-249-423-11	s	CARBON 3.3K 5% 1/4W
R621	1-216-073-00	s	METAL, CHIP 10K 5% 1/10W
R622	1-249-417-11	s	CARBON 1K 5% 1/4W
R623	1-216-664-11	s	METAL, CHIP 3.6K 0.5% 1/10W
R624	1-216-121-00	s	METAL, CHIP 1M 5% 1/10W
R625	1-216-669-11	s	METAL, CHIP 5.6K 0.5% 1/10W
R626	1-249-402-11	s	CARBON 56 5% 1/4W
R627	1-216-659-11	s	METAL, CHIP 2.2K 0.5% 1/10W
R628	1-215-393-00	s	METAL 68 1% 1/6W
R629	1-216-077-00	s	METAL, CHIP 15K 5% 1/10W
R630	1-249-423-11	s	CARBON 3.3K 5% 1/4W
R631	1-215-393-00	s	METAL 68 1% 1/6W
R632	1-215-393-00	s	METAL 68 1% 1/6W
R701	1-216-089-00	s	METAL, CHIP 47K 5% 1/10W
R702	1-216-089-00	s	METAL, CHIP 47K 5% 1/10W
R703	1-216-049-00	s	METAL, CHIP 1K 5% 1/10W
R704	1-216-049-00	s	METAL, CHIP 1K 5% 1/10W
R705	1-216-089-00	s	METAL, CHIP 47K 5% 1/10W
R707	1-216-049-00	s	METAL, CHIP 1K 5% 1/10W
R708	1-249-411-11	s	CARBON 330 5% 1/4W
R709	1-249-411-11	s	CARBON 330 5% 1/4W
R710	1-216-089-00	s	METAL, CHIP 47K 5% 1/10W
R712	1-216-049-00	s	METAL, CHIP 1K 5% 1/10W
R713	1-216-089-00	s	METAL, CHIP 47K 5% 1/10W
R714	1-216-675-11	s	METAL, CHIP 10K 0.5% 1/10W
R715	1-216-049-00	s	METAL, CHIP 1K 5% 1/10W
R716	1-216-682-11	s	METAL, CHIP 20K 0.5% 1/10W
R717	1-216-679-11	s	METAL, CHIP 15K 0.5% 1/10W
R718	1-216-682-11	s	METAL, CHIP 20K 0.5% 1/10W

(AFM-8 BOARD)

Ref. No. or Q'ty	Part No.	SP	Description
R719	1-216-692-11	s	METAL, CHIP 51K 0.5% 1/10W
R720	1-216-682-11	s	METAL, CHIP 20K 0.5% 1/10W
R721	1-216-692-11	s	METAL, CHIP 51K 0.5% 1/10W
R724	1-216-089-00	s	METAL, CHIP 47K 5% 1/10W
R725	1-216-089-00	s	METAL, CHIP 47K 5% 1/10W
R726	1-216-049-00	s	METAL, CHIP 1K 5% 1/10W
R751	1-249-411-11	s	CARBON 330 5% 1/4W
R752	1-249-411-11	s	CARBON 330 5% 1/4W
R753	1-216-089-00	s	METAL, CHIP 47K 5% 1/10W
R754	1-216-049-00	s	METAL, CHIP 1K 5% 1/10W
R755	1-216-089-00	s	METAL, CHIP 47K 5% 1/10W
R756	1-216-049-00	s	METAL, CHIP 1K 5% 1/10W
R802	1-216-638-11	s	METAL, CHIP 300 0.5% 1/10W
R804	1-216-638-11	s	METAL, CHIP 300 0.5% 1/10W
R805	1-216-295-00	s	METAL, CHIP 0-OHM
R807	1-216-638-11	s	METAL, CHIP 300 0.5% 1/10W
R809	1-216-638-11	s	METAL, CHIP 300 0.5% 1/10W
R810	1-216-295-00	s	METAL, CHIP 0-OHM
R811	1-216-025-00	s	METAL, CHIP 100 5% 1/10W
R812	1-216-057-00	s	METAL, CHIP 2.2K 5% 1/10W
R813	1-216-025-00	s	METAL, CHIP 100 5% 1/10W
R814	1-216-620-11	s	METAL, CHIP 51 0.5% 1/10W
R815	1-216-295-00	s	METAL, CHIP 0-OHM
R816	1-216-025-00	s	METAL, CHIP 100 5% 1/10W
R817	1-216-057-00	s	METAL, CHIP 2.2K 5% 1/10W
R818	1-216-025-00	s	METAL, CHIP 100 5% 1/10W
R819	1-216-025-00	s	METAL, CHIP 100 5% 1/10W
R820	1-216-025-00	s	METAL, CHIP 100 5% 1/10W
R902	1-216-638-11	s	METAL, CHIP 300 0.5% 1/10W
R904	1-216-638-11	s	METAL, CHIP 300 0.5% 1/10W
R905	1-216-295-00	s	METAL, CHIP 0-OHM
R908	1-216-638-11	s	METAL, CHIP 300 0.5% 1/10W
R910	1-216-638-11	s	METAL, CHIP 300 0.5% 1/10W
R911	1-216-295-00	s	METAL, CHIP 0-OHM
R913	1-216-620-11	s	METAL, CHIP 51 0.5% 1/10W
R914	1-216-295-00	s	METAL, CHIP 0-OHM
R915	1-216-025-00	s	METAL, CHIP 100 5% 1/10W
R916	1-216-025-00	s	METAL, CHIP 100 5% 1/10W
RV1	1-238-805-11	s	RES, ADJ METAL 100K
RV2	1-238-805-11	s	RES, ADJ METAL 100K
RV101	1-238-800-11	s	RES, ADJ METAL 2K
RV102	1-238-800-11	s	RES, ADJ METAL 2K
RV103	1-238-803-11	s	RES, ADJ METAL 20K
RV104	1-238-803-11	s	RES, ADJ METAL 20K
RV105	1-238-804-11	s	RES, ADJ METAL 50K
RV107	1-238-801-11	s	RES, ADJ METAL 5K
RV201	1-238-800-11	s	RES, ADJ METAL 2K
RV202	1-238-800-11	s	RES, ADJ METAL 2K
RV203	1-238-803-11	s	RES, ADJ METAL 20K
RV204	1-238-803-11	s	RES, ADJ METAL 20K
RV205	1-238-804-11	s	RES, ADJ METAL 50K
RV301	1-237-036-11	s	RES, ADJ, METAL 10K
RV302	1-237-036-11	s	RES, ADJ, METAL 10K
RV501	1-237-036-11	s	RES, ADJ, METAL 10K
RV502	1-237-036-11	s	RES, ADJ, METAL 10K
RV601	1-238-797-11	s	RES, ADJ METAL 200
RV602	1-238-797-11	s	RES, ADJ METAL 200
S1	1-553-977-00	s	SWITCH, SLIDE

(AFM-8 BOARD)

Ref. No. or Q'ty	Part No.	SP	Description
T601	1-433-194-00	s	TRANSFORMER, BIAS OSCILLATION
T602	1-433-194-00	s	TRANSFORMER, BIAS OSCILLATION

AU-145 BOARD

Ref. No. or Q'ty	Part No.	SP	Description
1pc	A-8713-459-A	o	MOUNTED CIRCUIT BOARD, AU-145
C1	1-126-103-11	s	ELECT 470uF 20% 16V
C2	1-124-907-11	s	ELECT 10uF 20% 50V
C101	1-124-477-11	s	ELECT 47uF 20% 25V
C102	1-163-109-00	s	CERAMIC, CHIP 47PF 5% 50V
C103	1-163-109-00	s	CERAMIC, CHIP 47PF 5% 50V
C106	1-124-907-11	s	ELECT 10uF 20% 50V
C107	1-124-907-11	s	ELECT 10uF 20% 50V
C108	1-124-907-11	s	ELECT 10uF 20% 50V
C109	1-124-907-11	s	ELECT 10uF 20% 50V
C110	1-126-103-11	s	ELECT 470uF 20% 16V
C111	1-126-103-11	s	ELECT 470uF 20% 16V
C201	1-124-477-11	s	ELECT 47uF 20% 25V
C202	1-163-109-00	s	CERAMIC, CHIP 47PF 5% 50V
C203	1-163-109-00	s	CERAMIC, CHIP 47PF 5% 50V
C206	1-124-907-11	s	ELECT 10uF 20% 50V
C207	1-124-907-11	s	ELECT 10uF 20% 50V
C208	1-124-907-11	s	ELECT 10uF 20% 50V
C209	1-124-907-11	s	ELECT 10uF 20% 50V
C210	1-126-103-11	s	ELECT 470uF 20% 16V
C211	1-126-103-11	s	ELECT 470uF 20% 16V
C301	1-124-477-11	s	ELECT 47uF 20% 25V
C302	1-163-109-00	s	CERAMIC, CHIP 47PF 5% 50V
C303	1-163-109-00	s	CERAMIC, CHIP 47PF 5% 50V
C306	1-124-907-11	s	ELECT 10uF 20% 50V
C307	1-124-907-11	s	ELECT 10uF 20% 50V
C308	1-124-907-11	s	ELECT 10uF 20% 50V
C309	1-124-907-11	s	ELECT 10uF 20% 50V
C310	1-126-103-11	s	ELECT 470uF 20% 16V
C311	1-126-103-11	s	ELECT 470uF 20% 16V
C401	1-124-477-11	s	ELECT 47uF 20% 25V
C402	1-163-109-00	s	CERAMIC, CHIP 47PF 5% 50V
C403	1-163-109-00	s	CERAMIC, CHIP 47PF 5% 50V
C406	1-124-907-11	s	ELECT 10uF 20% 50V
C407	1-124-907-11	s	ELECT 10uF 20% 50V
C408	1-124-907-11	s	ELECT 10uF 20% 50V
C409	1-124-907-11	s	ELECT 10uF 20% 50V
C410	1-126-103-11	s	ELECT 470uF 20% 16V
C411	1-126-103-11	s	ELECT 470uF 20% 16V
C501	1-124-477-11	s	ELECT 47uF 20% 25V
C502	1-163-109-00	s	CERAMIC, CHIP 47PF 5% 50V
C503	1-163-109-00	s	CERAMIC, CHIP 47PF 5% 50V
C506	1-124-907-11	s	ELECT 10uF 20% 50V
C507	1-124-907-11	s	ELECT 10uF 20% 50V
C508	1-124-907-11	s	ELECT 10uF 20% 50V
C509	1-124-907-11	s	ELECT 10uF 20% 50V
C510	1-126-103-11	s	ELECT 470uF 20% 16V
C511	1-126-103-11	s	ELECT 470uF 20% 16V
C601	1-124-477-11	s	ELECT 47uF 20% 25V
C602	1-163-109-00	s	CERAMIC, CHIP 47PF 5% 50V
C603	1-163-109-00	s	CERAMIC, CHIP 47PF 5% 50V
C606	1-124-907-11	s	ELECT 10uF 20% 50V
C607	1-124-907-11	s	ELECT 10uF 20% 50V
C608	1-124-907-11	s	ELECT 10uF 20% 50V
C609	1-124-907-11	s	ELECT 10uF 20% 50V
C610	1-126-103-11	s	ELECT 470uF 20% 16V
C611	1-126-103-11	s	ELECT 470uF 20% 16V
C801	1-126-103-11	s	ELECT 470uF 20% 16V

(AU-145 BOARD)

Ref. No. or Q'ty	Part No.	SP	Description
C802	1-126-103-11	S	ELECT 470uF 20% 16V
C803	1-163-251-11	S	CERAMIC, CHIP 100PF 5% 50V
C804	1-126-103-11	S	ELECT 470uF 20% 16V
C805	1-163-809-11	S	CERAMIC, CHIP 0.047uF 10% 25V
C806	1-126-103-11	S	ELECT 470uF 20% 16V
C807	1-163-809-11	S	CERAMIC, CHIP 0.047uF 10% 25V
C808	1-163-251-11	S	CERAMIC, CHIP 100PF 5% 50V
C809	1-126-103-11	S	ELECT 470uF 20% 16V
C810	1-126-103-11	S	ELECT 470uF 20% 16V
C811	1-163-251-11	S	CERAMIC, CHIP 100PF 5% 50V
C812	1-163-809-11	S	CERAMIC, CHIP 0.047uF 10% 25V
C813	1-126-103-11	S	ELECT 470uF 20% 16V
C814	1-126-103-11	S	ELECT 470uF 20% 16V
C815	1-163-809-11	S	CERAMIC, CHIP 0.047uF 10% 25V
C816	1-163-251-11	S	CERAMIC, CHIP 100PF 5% 50V
C817	1-126-103-11	S	ELECT 470uF 20% 16V
C818	1-126-103-11	S	ELECT 470uF 20% 16V
C819	1-163-251-11	S	CERAMIC, CHIP 100PF 5% 50V
C820	1-163-809-11	S	CERAMIC, CHIP 0.047uF 10% 25V
C821	1-126-103-11	S	ELECT 470uF 20% 16V
C822	1-126-103-11	S	ELECT 470uF 20% 16V
C823	1-163-809-11	S	CERAMIC, CHIP 0.047uF 10% 25V
C824	1-163-251-11	S	CERAMIC, CHIP 100PF 5% 50V
CN110	1-573-782-21	O	CONNECTOR, PHEC 60P, MALE
CN111	1-573-782-21	O	CONNECTOR, PHEC 60P, MALE
COP101	1-565-413-11	O	PLUG, SHORTING
COP201	1-565-413-11	O	PLUG, SHORTING
COP301	1-565-413-11	O	PLUG, SHORTING
COP401	1-565-413-11	O	PLUG, SHORTING
COP501	1-565-413-11	O	PLUG, SHORTING
COP601	1-565-413-11	O	PLUG, SHORTING
COR101	1-565-396-11	O	PIN, DIL 10P
COR201	1-565-396-11	O	PIN, DIL 10P
COR301	1-565-396-11	O	PIN, DIL 10P
COR401	1-565-396-11	O	PIN, DIL 10P
COR501	1-565-396-11	O	PIN, DIL 10P
COR601	1-565-396-11	O	PIN, DIL 10P
D1	8-719-200-02	S	DIODE 10E2
D2	8-719-200-02	S	DIODE 10E2
D51	8-719-123-85	S	DIODE 1SS304
D52	8-719-123-82	S	DIODE 1SS303-T1
D101	8-719-123-82	S	DIODE 1SS303-T1
D102	8-719-123-85	S	DIODE 1SS304
D103	8-719-123-82	S	DIODE 1SS303-T1
D104	8-719-123-85	S	DIODE 1SS304
D105	8-719-800-76	S	DIODE 1SS226
D106	8-719-800-76	S	DIODE 1SS226
D201	8-719-123-82	S	DIODE 1SS303-T1
D202	8-719-123-85	S	DIODE 1SS304
D203	8-719-123-82	S	DIODE 1SS303-T1
D204	8-719-123-85	S	DIODE 1SS304
D205	8-719-800-76	S	DIODE 1SS226
D206	8-719-800-76	S	DIODE 1SS226
D301	8-719-123-82	S	DIODE 1SS303-T1
D302	8-719-123-85	S	DIODE 1SS304
D303	8-719-123-82	S	DIODE 1SS303-T1
D304	8-719-123-85	S	DIODE 1SS304

(AU-145 BOARD)

Ref. No. or Q'ty	Part No.	SP	Description
D305	8-719-800-76	S	DIODE 1SS226
D306	8-719-800-76	S	DIODE 1SS226
D401	8-719-123-82	S	DIODE 1SS303-T1
D402	8-719-123-85	S	DIODE 1SS304
D403	8-719-123-82	S	DIODE 1SS303-T1
D404	8-719-123-85	S	DIODE 1SS304
D405	8-719-800-76	S	DIODE 1SS226
D406	8-719-800-76	S	DIODE 1SS226
D501	8-719-123-82	S	DIODE 1SS303-T1
D502	8-719-123-85	S	DIODE 1SS304
D503	8-719-123-82	S	DIODE 1SS303-T1
D504	8-719-123-85	S	DIODE 1SS304
D505	8-719-800-76	S	DIODE 1SS226
D506	8-719-800-76	S	DIODE 1SS226
D601	8-719-123-82	S	DIODE 1SS303-T1
D602	8-719-123-85	S	DIODE 1SS304
D603	8-719-123-82	S	DIODE 1SS303-T1
D604	8-719-123-85	S	DIODE 1SS304
D605	8-719-800-76	S	DIODE 1SS226
D606	8-719-800-76	S	DIODE 1SS226
IC51	8-759-981-98	S	IC RC4560DD
IC52	8-759-981-98	S	IC RC4560DD
IC101	8-759-981-98	S	IC RC4560DD
IC102	8-759-981-98	S	IC RC4560DD
IC201	8-759-981-98	S	IC RC4560DD
IC202	8-759-981-98	S	IC RC4560DD
IC301	8-759-981-98	S	IC RC4560DD
IC302	8-759-981-98	S	IC RC4560DD
IC401	8-759-981-98	S	IC RC4560DD
IC402	8-759-981-98	S	IC RC4560DD
IC501	8-759-981-98	S	IC RC4560DD
IC502	8-759-981-98	S	IC RC4560DD
IC601	8-759-981-98	S	IC RC4560DD
IC602	8-759-981-98	S	IC RC4560DD
Q1	8-729-173-13	S	TRANSISTOR 2SB731
Q51	8-729-205-38	S	TRANSISTOR 2SK208-Y
Q52	8-729-203-30	S	TRANSISTOR 2SJ106-Y
Q53	8-729-205-38	S	TRANSISTOR 2SK208-Y
Q54	8-729-203-30	S	TRANSISTOR 2SJ106-Y
Q55	8-729-905-12	S	TRANSISTOR DTA144EU
Q101	8-729-209-07	S	TRANSISTOR 2SC4213-B
Q102	8-729-209-07	S	TRANSISTOR 2SC4213-B
Q103	8-729-209-07	S	TRANSISTOR 2SC4213-B
Q104	8-729-209-07	S	TRANSISTOR 2SC4213-B
Q105	8-729-180-93	S	TRANSISTOR 2SD809
Q106	8-729-173-13	S	TRANSISTOR 2SB731
Q107	8-729-180-93	S	TRANSISTOR 2SD809
Q108	8-729-173-13	S	TRANSISTOR 2SB731
Q109	8-729-117-32	S	TRANSISTOR 2SC4177
Q110	8-729-117-16	S	TRANSISTOR 2SA1611-M6
Q111	8-729-117-32	S	TRANSISTOR 2SC4177
Q112	8-729-117-16	S	TRANSISTOR 2SA1611-M6
Q201	8-729-209-07	S	TRANSISTOR 2SC4213-B
Q202	8-729-209-07	S	TRANSISTOR 2SC4213-B
Q203	8-729-209-07	S	TRANSISTOR 2SC4213-B
Q204	8-729-209-07	S	TRANSISTOR 2SC4213-B
Q205	8-729-180-93	S	TRANSISTOR 2SD809
Q206	8-729-173-13	S	TRANSISTOR 2SB731
Q207	8-729-180-93	S	TRANSISTOR 2SD809

(AU-145 BOARD)

Ref. No. or Q'ty	Part No.	SP	Description
Q208	8-729-173-13	s	TRANSISTOR 2SB731
Q209	8-729-117-32	s	TRANSISTOR 2SC4177
Q210	8-729-117-16	s	TRANSISTOR 2SA1611-M6
Q211	8-729-117-32	s	TRANSISTOR 2SC4177
Q212	8-729-117-16	s	TRANSISTOR 2SA1611-M6
Q301	8-729-209-07	s	TRANSISTOR 2SC4213-B
Q302	8-729-209-07	s	TRANSISTOR 2SC4213-B
Q303	8-729-209-07	s	TRANSISTOR 2SC4213-B
Q304	8-729-209-07	s	TRANSISTOR 2SC4213-B
Q305	8-729-180-93	s	TRANSISTOR 2SD809
Q306	8-729-173-13	s	TRANSISTOR 2SB731
Q307	8-729-180-93	s	TRANSISTOR 2SD809
Q308	8-729-173-13	s	TRANSISTOR 2SB731
Q309	8-729-117-32	s	TRANSISTOR 2SC4177
Q310	8-729-117-16	s	TRANSISTOR 2SA1611-M6
Q311	8-729-117-32	s	TRANSISTOR 2SC4177
Q312	8-729-117-16	s	TRANSISTOR 2SA1611-M6
Q401	8-729-209-07	s	TRANSISTOR 2SC4213-B
Q402	8-729-209-07	s	TRANSISTOR 2SC4213-B
Q403	8-729-209-07	s	TRANSISTOR 2SC4213-B
Q404	8-729-209-07	s	TRANSISTOR 2SC4213-B
Q405	8-729-180-93	s	TRANSISTOR 2SD809
Q406	8-729-173-13	s	TRANSISTOR 2SB731
Q407	8-729-180-93	s	TRANSISTOR 2SD809
Q408	8-729-173-13	s	TRANSISTOR 2SB731
Q409	8-729-117-32	s	TRANSISTOR 2SC4177
Q410	8-729-117-16	s	TRANSISTOR 2SA1611-M6
Q411	8-729-117-32	s	TRANSISTOR 2SC4177
Q412	8-729-117-16	s	TRANSISTOR 2SA1611-M6
Q501	8-729-209-07	s	TRANSISTOR 2SC4213-B
Q502	8-729-209-07	s	TRANSISTOR 2SC4213-B
Q503	8-729-209-07	s	TRANSISTOR 2SC4213-B
Q504	8-729-209-07	s	TRANSISTOR 2SC4213-B
Q505	8-729-180-93	s	TRANSISTOR 2SD809
Q506	8-729-173-13	s	TRANSISTOR 2SB731
Q507	8-729-180-93	s	TRANSISTOR 2SD809
Q508	8-729-173-13	s	TRANSISTOR 2SB731
Q509	8-729-117-32	s	TRANSISTOR 2SC4177
Q510	8-729-117-16	s	TRANSISTOR 2SA1611-M6
Q511	8-729-117-32	s	TRANSISTOR 2SC4177
Q512	8-729-117-16	s	TRANSISTOR 2SA1611-M6
Q601	8-729-209-07	s	TRANSISTOR 2SC4213-B
Q602	8-729-209-07	s	TRANSISTOR 2SC4213-B
Q603	8-729-209-07	s	TRANSISTOR 2SC4213-B
Q604	8-729-209-07	s	TRANSISTOR 2SC4213-B
Q605	8-729-180-93	s	TRANSISTOR 2SD809
Q606	8-729-173-13	s	TRANSISTOR 2SB731
Q607	8-729-180-93	s	TRANSISTOR 2SD809
Q608	8-729-173-13	s	TRANSISTOR 2SB731
Q609	8-729-117-32	s	TRANSISTOR 2SC4177
Q610	8-729-117-16	s	TRANSISTOR 2SA1611-M6
Q611	8-729-117-32	s	TRANSISTOR 2SC4177
Q612	8-729-117-16	s	TRANSISTOR 2SA1611-M6
Q801	8-729-180-93	s	TRANSISTOR 2SD809
Q802	8-729-173-13	s	TRANSISTOR 2SB731
Q803	8-729-180-93	s	TRANSISTOR 2SD809
Q804	8-729-173-13	s	TRANSISTOR 2SB731
Q805	8-729-180-93	s	TRANSISTOR 2SD809
Q806	8-729-173-13	s	TRANSISTOR 2SB731

(AU-145 BOARD)

Ref. No. or Q'ty	Part No.	SP	Description
R1	1-216-033-00	s	METAL, CHIP 220 5% 1/10W
R2	1-216-073-00	s	METAL, CHIP 10K 5% 1/10W
R3	1-216-089-00	s	METAL, CHIP 47K 5% 1/10W
R51	1-216-675-11	s	METAL, CHIP 10K 0.5% 1/10W
R52	1-216-675-11	s	METAL, CHIP 10K 0.5% 1/10W
R53	1-216-675-11	s	METAL, CHIP 10K 0.5% 1/10W
R54	1-216-675-11	s	METAL, CHIP 10K 0.5% 1/10W
R55	1-216-065-00	s	METAL, CHIP 4.7K 5% 1/10W
R56	1-216-675-11	s	METAL, CHIP 10K 0.5% 1/10W
R57	1-216-675-11	s	METAL, CHIP 10K 0.5% 1/10W
R58	1-216-065-00	s	METAL, CHIP 4.7K 5% 1/10W
R59	1-216-121-00	s	METAL, CHIP 1M 5% 1/10W
R60	1-216-121-00	s	METAL, CHIP 1M 5% 1/10W
R61	1-216-121-00	s	METAL, CHIP 1M 5% 1/10W
R62	1-216-121-00	s	METAL, CHIP 1M 5% 1/10W
R63	1-216-121-00	s	METAL, CHIP 1M 5% 1/10W
R64	1-216-121-00	s	METAL, CHIP 1M 5% 1/10W
R65	1-216-121-00	s	METAL, CHIP 1M 5% 1/10W
R66	1-216-121-00	s	METAL, CHIP 1M 5% 1/10W
R67	1-216-691-11	s	METAL, CHIP 47K 0.5% 1/10W
R68	1-216-691-11	s	METAL, CHIP 47K 0.5% 1/10W
R69	1-216-081-00	s	METAL, CHIP 22K 5% 1/10W
R70	1-216-691-11	s	METAL, CHIP 47K 0.5% 1/10W
R71	1-216-691-11	s	METAL, CHIP 47K 0.5% 1/10W
R72	1-216-081-00	s	METAL, CHIP 22K 5% 1/10W
R73	1-216-089-00	s	METAL, CHIP 47K 5% 1/10W
R101	1-216-680-11	s	METAL, CHIP 2.4K 0.5% 1/10W
R102	1-216-620-11	s	METAL, CHIP 51 0.5% 1/10W
R103	1-216-641-11	s	METAL, CHIP 390 0.5% 1/10W
R104	1-216-646-11	s	METAL, CHIP 620 0.5% 1/10W
R105	1-216-672-11	s	METAL, CHIP 7.5K 0.5% 1/10W
R106	1-216-681-11	s	METAL, CHIP 2.7K 0.5% 1/10W
R107	1-216-681-11	s	METAL, CHIP 2.7K 0.5% 1/10W
R108	1-216-065-00	s	METAL, CHIP 4.7K 5% 1/10W
R109	1-216-667-11	s	METAL, CHIP 4.7K 0.5% 1/10W
R110	1-216-667-11	s	METAL, CHIP 4.7K 0.5% 1/10W
R111	1-216-667-11	s	METAL, CHIP 4.7K 0.5% 1/10W
R112	1-216-667-11	s	METAL, CHIP 4.7K 0.5% 1/10W
R113	1-216-121-00	s	METAL, CHIP 1M 5% 1/10W
R114	1-216-679-11	s	METAL, CHIP 15K 0.5% 1/10W
R115	1-216-121-00	s	METAL, CHIP 1M 5% 1/10W
R116	1-216-679-11	s	METAL, CHIP 15K 0.5% 1/10W
R117	1-216-033-00	s	METAL, CHIP 220 5% 1/10W
R118	1-216-033-00	s	METAL, CHIP 220 5% 1/10W
R119	1-216-073-00	s	METAL, CHIP 10K 5% 1/10W
R120	1-216-073-00	s	METAL, CHIP 10K 5% 1/10W
R121	1-216-073-00	s	METAL, CHIP 10K 5% 1/10W
R122	1-216-073-00	s	METAL, CHIP 10K 5% 1/10W
R123	1-216-089-00	s	METAL, CHIP 47K 5% 1/10W
R124	1-216-089-00	s	METAL, CHIP 47K 5% 1/10W
R125	1-216-089-00	s	METAL, CHIP 47K 5% 1/10W
R126	1-216-089-00	s	METAL, CHIP 47K 5% 1/10W
R127	1-249-390-11	s	CARBON 5.6 5% 1/4W
R128	1-249-390-11	s	CARBON 5.6 5% 1/4W
R129	1-249-390-11	s	CARBON 5.6 5% 1/4W
R130	1-249-390-11	s	CARBON 5.6 5% 1/4W
R131	1-249-369-11	s	CARBON 4.7 5% 1/4W
R132	1-216-679-11	s	METAL, CHIP 15K 0.5% 1/10W

(AU-145 BOARD)

Ref. No. or Q'ty	Part No.	SP	Description
R133	1-249-389-11	s	CARBON 4.7 5% 1/4W
R134	1-216-073-00	s	METAL, CHIP 10K 5% 1/10W
R135	1-216-631-11	s	METAL, CHIP 150 0.5% 1/10W
R136	1-216-679-11	s	METAL, CHIP 15K 0.5% 1/10W
R137	1-216-073-00	s	METAL, CHIP 10K 5% 1/10W
R138	1-216-631-11	s	METAL, CHIP 150 0.5% 1/10W
R139	1-216-675-11	s	METAL, CHIP 10K 0.5% 1/10W
R140	1-216-675-11	s	METAL, CHIP 10K 0.5% 1/10W
R141	1-216-675-11	s	METAL, CHIP 10K 0.5% 1/10W
R142	1-216-675-11	s	METAL, CHIP 10K 0.5% 1/10W
R143	1-216-653-11	s	METAL, CHIP 1.2K 0.5% 1/10W
R144	1-216-610-11	s	METAL FILM CHIP 20 0.50% 1/10W
R145	1-216-614-11	s	METAL, CHIP 30 0.50% 1/10W
R201	1-216-660-11	s	METAL, CHIP 2.4K 0.5% 1/10W
R202	1-216-620-11	s	METAL, CHIP 51 0.5% 1/10W
R203	1-216-641-11	s	METAL, CHIP 390 0.5% 1/10W
R204	1-216-646-11	s	METAL, CHIP 620 0.5% 1/10W
R205	1-216-672-11	s	METAL, CHIP 7.5K 0.5% 1/10W
R206	1-216-661-11	s	METAL, CHIP 2.7K 0.5% 1/10W
R207	1-216-661-11	s	METAL, CHIP 2.7K 0.5% 1/10W
R208	1-216-065-00	s	METAL, CHIP 4.7K 5% 1/10W
R209	1-216-667-11	s	METAL, CHIP 4.7K 0.5% 1/10W
R210	1-216-667-11	s	METAL, CHIP 4.7K 0.5% 1/10W
R211	1-216-667-11	s	METAL, CHIP 4.7K 0.5% 1/10W
R212	1-216-667-11	s	METAL, CHIP 4.7K 0.5% 1/10W
R213	1-216-121-00	s	METAL, CHIP 1M 5% 1/10W
R214	1-216-679-11	s	METAL, CHIP 15K 0.5% 1/10W
R215	1-216-121-00	s	METAL, CHIP 1M 5% 1/10W
R216	1-216-679-11	s	METAL, CHIP 15K 0.5% 1/10W
R217	1-216-033-00	s	METAL, CHIP 220 5% 1/10W
R218	1-216-033-00	s	METAL, CHIP 220 5% 1/10W
R219	1-216-073-00	s	METAL, CHIP 10K 5% 1/10W
R220	1-216-073-00	s	METAL, CHIP 10K 5% 1/10W
R221	1-216-073-00	s	METAL, CHIP 10K 5% 1/10W
R222	1-216-073-00	s	METAL, CHIP 10K 5% 1/10W
R223	1-216-089-00	s	METAL, CHIP 47K 5% 1/10W
R224	1-216-089-00	s	METAL, CHIP 47K 5% 1/10W
R225	1-216-089-00	s	METAL, CHIP 47K 5% 1/10W
R226	1-216-089-00	s	METAL, CHIP 47K 5% 1/10W
R227	1-249-390-11	s	CARBON 5.6 5% 1/4W
R228	1-249-390-11	s	CARBON 5.6 5% 1/4W
R229	1-249-390-11	s	CARBON 5.6 5% 1/4W
R230	1-249-390-11	s	CARBON 5.6 5% 1/4W
R231	1-249-389-11	s	CARBON 4.7 5% 1/4W
R232	1-216-679-11	s	METAL, CHIP 15K 0.5% 1/10W
R233	1-249-389-11	s	CARBON 4.7 5% 1/4W
R234	1-216-073-00	s	METAL, CHIP 10K 5% 1/10W
R235	1-216-631-11	s	METAL, CHIP 150 0.5% 1/10W
R236	1-216-679-11	s	METAL, CHIP 15K 0.5% 1/10W
R237	1-216-073-00	s	METAL, CHIP 10K 5% 1/10W
R238	1-216-631-11	s	METAL, CHIP 150 0.5% 1/10W
R239	1-216-675-11	s	METAL, CHIP 10K 0.5% 1/10W
R240	1-216-675-11	s	METAL, CHIP 10K 0.5% 1/10W
R241	1-216-675-11	s	METAL, CHIP 10K 0.5% 1/10W
R242	1-216-675-11	s	METAL, CHIP 10K 0.5% 1/10W
R243	1-216-653-11	s	METAL, CHIP 1.2K 0.5% 1/10W
R244	1-216-610-11	s	METAL FILM CHIP 20 0.50% 1/10W
R245	1-216-614-11	s	METAL, CHIP 30 0.50% 1/10W
R301	1-216-660-11	s	METAL, CHIP 2.4K 0.5% 1/10W

(AU-145 BOARD)

Ref. No. or Q'ty	Part No.	SP	Description
R302	1-216-620-11	s	METAL, CHIP 51 0.5% 1/10W
R303	1-216-641-11	s	METAL, CHIP 390 0.5% 1/10W
R304	1-216-646-11	s	METAL, CHIP 620 0.5% 1/10W
R305	1-216-672-11	s	METAL, CHIP 7.5K 0.5% 1/10W
R306	1-216-661-11	s	METAL, CHIP 2.7K 0.5% 1/10W
R307	1-216-661-11	s	METAL, CHIP 2.7K 0.5% 1/10W
R308	1-216-065-00	s	METAL, CHIP 4.7K 5% 1/10W
R309	1-216-667-11	s	METAL, CHIP 4.7K 0.5% 1/10W
R310	1-216-667-11	s	METAL, CHIP 4.7K 0.5% 1/10W
R311	1-216-667-11	s	METAL, CHIP 4.7K 0.5% 1/10W
R312	1-216-667-11	s	METAL, CHIP 4.7K 0.5% 1/10W
R313	1-216-121-00	s	METAL, CHIP 1M 5% 1/10W
R314	1-216-679-11	s	METAL, CHIP 15K 0.5% 1/10W
R315	1-216-121-00	s	METAL, CHIP 1M 5% 1/10W
R316	1-216-679-11	s	METAL, CHIP 15K 0.5% 1/10W
R317	1-216-033-00	s	METAL, CHIP 220 5% 1/10W
R318	1-216-033-00	s	METAL, CHIP 220 5% 1/10W
R319	1-216-073-00	s	METAL, CHIP 10K 5% 1/10W
R320	1-216-073-00	s	METAL, CHIP 10K 5% 1/10W
R321	1-216-073-00	s	METAL, CHIP 10K 5% 1/10W
R322	1-216-073-00	s	METAL, CHIP 10K 5% 1/10W
R323	1-216-089-00	s	METAL, CHIP 47K 5% 1/10W
R324	1-216-089-00	s	METAL, CHIP 47K 5% 1/10W
R325	1-216-089-00	s	METAL, CHIP 47K 5% 1/10W
R326	1-216-089-00	s	METAL, CHIP 47K 5% 1/10W
R327	1-249-390-11	s	CARBON 5.6 5% 1/4W
R328	1-249-390-11	s	CARBON 5.6 5% 1/4W
R329	1-249-390-11	s	CARBON 5.6 5% 1/4W
R330	1-249-390-11	s	CARBON 5.6 5% 1/4W
R331	1-249-389-11	s	CARBON 4.7 5% 1/4W
R332	1-216-679-11	s	METAL, CHIP 15K 0.5% 1/10W
R333	1-249-389-11	s	CARBON 4.7 5% 1/4W
R334	1-216-073-00	s	METAL, CHIP 10K 5% 1/10W
R335	1-216-631-11	s	METAL, CHIP 150 0.5% 1/10W
R336	1-216-679-11	s	METAL, CHIP 15K 0.5% 1/10W
R337	1-216-073-00	s	METAL, CHIP 10K 5% 1/10W
R338	1-216-631-11	s	METAL, CHIP 150 0.5% 1/10W
R339	1-216-675-11	s	METAL, CHIP 10K 0.5% 1/10W
R340	1-216-675-11	s	METAL, CHIP 10K 0.5% 1/10W
R341	1-216-675-11	s	METAL, CHIP 10K 0.5% 1/10W
R342	1-216-675-11	s	METAL, CHIP 10K 0.5% 1/10W
R343	1-216-653-11	s	METAL, CHIP 1.2K 0.5% 1/10W
R344	1-216-610-11	s	METAL FILM CHIP 20 0.50% 1/10W
R345	1-216-614-11	s	METAL, CHIP 30 0.50% 1/10W
R401	1-216-660-11	s	METAL, CHIP 2.4K 0.5% 1/10W
R402	1-216-620-11	s	METAL, CHIP 51 0.5% 1/10W
R403	1-216-641-11	s	METAL, CHIP 390 0.5% 1/10W
R404	1-216-646-11	s	METAL, CHIP 620 0.5% 1/10W
R405	1-216-672-11	s	METAL, CHIP 7.5K 0.5% 1/10W
R406	1-216-661-11	s	METAL, CHIP 2.7K 0.5% 1/10W
R407	1-216-661-11	s	METAL, CHIP 2.7K 0.5% 1/10W
R408	1-216-065-00	s	METAL, CHIP 4.7K 5% 1/10W
R409	1-216-667-11	s	METAL, CHIP 4.7K 0.5% 1/10W
R410	1-216-667-11	s	METAL, CHIP 4.7K 0.5% 1/10W
R411	1-216-667-11	s	METAL, CHIP 4.7K 0.5% 1/10W
R412	1-216-667-11	s	METAL, CHIP 4.7K 0.5% 1/10W
R413	1-216-121-00	s	METAL, CHIP 1M 5% 1/10W
R414	1-216-679-11	s	METAL, CHIP 15K 0.5% 1/10W
R415	1-216-121-00	s	METAL, CHIP 1M 5% 1/10W

(AU-145 BOARD)

Ref. No. or Q'ty	Part No.	SP	Description
R416	1-216-679-11	s	METAL, CHIP 15K 0.5% 1/10W
R417	1-216-033-00	s	METAL, CHIP 220 5% 1/10W
R418	1-216-033-00	s	METAL, CHIP 220 5% 1/10W
R419	1-216-073-00	s	METAL, CHIP 10K 5% 1/10W
R420	1-216-073-00	s	METAL, CHIP 10K 5% 1/10W
R421	1-216-073-00	s	METAL, CHIP 10K 5% 1/10W
R422	1-216-073-00	s	METAL, CHIP 10K 5% 1/10W
R423	1-216-089-00	s	METAL, CHIP 47K 5% 1/10W
R424	1-216-089-00	s	METAL, CHIP 47K 5% 1/10W
R425	1-216-089-00	s	METAL, CHIP 47K 5% 1/10W
R426	1-216-089-00	s	METAL, CHIP 47K 5% 1/10W
R427	1-249-390-11	s	CARBON 5.6 5% 1/4W
R428	1-249-390-11	s	CARBON 5.6 5% 1/4W
R429	1-249-390-11	s	CARBON 5.6 5% 1/4W
R430	1-249-390-11	s	CARBON 5.6 5% 1/4W
R431	1-249-389-11	s	CARBON 4.7 5% 1/4W
R432	1-216-679-11	s	METAL, CHIP 15K 0.5% 1/10W
R433	1-249-389-11	s	CARBON 4.7 5% 1/4W
R434	1-216-073-00	s	METAL, CHIP 10K 5% 1/10W
R435	1-216-631-11	s	METAL, CHIP 150 0.5% 1/10W
R436	1-216-679-11	s	METAL, CHIP 15K 0.5% 1/10W
R437	1-216-073-00	s	METAL, CHIP 10K 5% 1/10W
R438	1-216-631-11	s	METAL, CHIP 150 0.5% 1/10W
R439	1-216-575-11	s	METAL, CHIP 10K 0.5% 1/10W
R440	1-216-675-11	s	METAL, CHIP 10K 0.5% 1/10W
R441	1-216-675-11	s	METAL, CHIP 10K 0.5% 1/10W
R442	1-216-675-11	s	METAL, CHIP 10K 0.5% 1/10W
R443	1-216-653-11	s	METAL, CHIP 1.2K 0.5% 1/10W
R444	1-216-610-11	s	METAL FILM CHIP 20 0.50% 1/10W
R445	1-216-614-11	s	METAL, CHIP 30 0.50% 1/10W
R501	1-216-660-11	s	METAL, CHIP 2.4K 0.5% 1/10W
R502	1-216-620-11	s	METAL, CHIP 51 0.5% 1/10W
R503	1-216-641-11	s	METAL, CHIP 390 0.5% 1/10W
R504	1-216-646-11	s	METAL, CHIP 820 0.5% 1/10W
R505	1-216-664-11	s	METAL, CHIP 3.6K 0.5% 1/10W
R506	1-216-661-11	s	METAL, CHIP 2.7K 0.5% 1/10W
R507	1-216-661-11	s	METAL, CHIP 2.7K 0.5% 1/10W
R508	1-216-065-00	s	METAL, CHIP 4.7K 5% 1/10W
R509	1-216-667-11	s	METAL, CHIP 4.7K 0.5% 1/10W
R510	1-216-667-11	s	METAL, CHIP 4.7K 0.5% 1/10W
R511	1-216-667-11	s	METAL, CHIP 4.7K 0.5% 1/10W
R512	1-216-667-11	s	METAL, CHIP 4.7K 0.5% 1/10W
R513	1-216-081-00	s	METAL, CHIP 22K 5% 1/10W
R514	1-216-679-11	s	METAL, CHIP 15K 0.5% 1/10W
R515	1-216-081-00	s	METAL, CHIP 22K 5% 1/10W
R516	1-216-679-11	s	METAL, CHIP 15K 0.5% 1/10W
R517	1-216-033-00	s	METAL, CHIP 220 5% 1/10W
R518	1-216-033-00	s	METAL, CHIP 220 5% 1/10W
R519	1-216-073-00	s	METAL, CHIP 10K 5% 1/10W
R520	1-216-073-00	s	METAL, CHIP 10K 5% 1/10W
R521	1-216-073-00	s	METAL, CHIP 10K 5% 1/10W
R522	1-216-073-00	s	METAL, CHIP 10K 5% 1/10W
R523	1-216-089-00	s	METAL, CHIP 47K 5% 1/10W
R524	1-216-089-00	s	METAL, CHIP 47K 5% 1/10W
R525	1-216-089-00	s	METAL, CHIP 47K 5% 1/10W
R526	1-216-089-00	s	METAL, CHIP 47K 5% 1/10W
R527	1-249-390-11	s	CARBON 5.6 5% 1/4W
R528	1-249-390-11	s	CARBON 5.6 5% 1/4W
R529	1-249-390-11	s	CARBON 5.6 5% 1/4W

(AU-145 BOARD)

Ref. No. or Q'ty	Part No.	SP	Description
R530	1-249-390-11	s	CARBON 5.6 5% 1/4W
R531	1-249-389-11	s	CARBON 4.7 5% 1/4W
R532	1-216-679-11	s	METAL, CHIP 15K 0.5% 1/10W
R533	1-249-389-11	s	CARBON 4.7 5% 1/4W
R534	1-216-073-00	s	METAL, CHIP 10K 5% 1/10W
R535	1-216-631-11	s	METAL, CHIP 150 0.5% 1/10W
R536	1-216-679-11	s	METAL, CHIP 15K 0.5% 1/10W
R537	1-216-073-00	s	METAL, CHIP 10K 5% 1/10W
R538	1-216-631-11	s	METAL, CHIP 150 0.5% 1/10W
R539	1-216-675-11	s	METAL, CHIP 10K 0.5% 1/10W
R540	1-216-675-11	s	METAL, CHIP 10K 0.5% 1/10W
R541	1-216-675-11	s	METAL, CHIP 10K 0.5% 1/10W
R542	1-216-675-11	s	METAL, CHIP 10K 0.5% 1/10W
R543	1-216-653-11	s	METAL, CHIP 1.2K 0.5% 1/10W
R544	1-216-610-11	s	METAL FILM CHIP 20 0.50% 1/10W
R545	1-216-614-11	s	METAL, CHIP 30 0.50% 1/10W
R601	1-216-680-11	s	METAL, CHIP 2.4K 0.5% 1/10W
R602	1-216-620-11	s	METAL, CHIP 51 0.5% 1/10W
R603	1-216-641-11	s	METAL, CHIP 390 0.5% 1/10W
R604	1-216-646-11	s	METAL, CHIP 820 0.5% 1/10W
R605	1-216-664-11	s	METAL, CHIP 3.6K 0.5% 1/10W
R606	1-216-661-11	s	METAL, CHIP 2.7K 0.5% 1/10W
R607	1-216-661-11	s	METAL, CHIP 2.7K 0.5% 1/10W
R608	1-216-065-00	s	METAL, CHIP 4.7K 5% 1/10W
R609	1-216-667-11	s	METAL, CHIP 4.7K 0.5% 1/10W
R610	1-216-667-11	s	METAL, CHIP 4.7K 0.5% 1/10W
R611	1-216-667-11	s	METAL, CHIP 4.7K 0.5% 1/10W
R612	1-216-667-11	s	METAL, CHIP 4.7K 0.5% 1/10W
R613	1-216-081-00	s	METAL, CHIP 22K 5% 1/10W
R614	1-216-679-11	s	METAL, CHIP 15K 0.5% 1/10W
R615	1-216-081-00	s	METAL, CHIP 22K 5% 1/10W
R616	1-216-679-11	s	METAL, CHIP 15K 0.5% 1/10W
R617	1-216-033-00	s	METAL, CHIP 220 5% 1/10W
R618	1-216-033-00	s	METAL, CHIP 220 5% 1/10W
R619	1-216-073-00	s	METAL, CHIP 10K 5% 1/10W
R620	1-216-073-00	s	METAL, CHIP 10K 5% 1/10W
R621	1-216-073-00	s	METAL, CHIP 10K 5% 1/10W
R622	1-216-073-00	s	METAL, CHIP 10K 5% 1/10W
R623	1-216-089-00	s	METAL, CHIP 47K 5% 1/10W
R624	1-216-089-00	s	METAL, CHIP 47K 5% 1/10W
R625	1-216-089-00	s	METAL, CHIP 47K 5% 1/10W
R626	1-216-089-00	s	METAL, CHIP 47K 5% 1/10W
R627	1-249-390-11	s	CARBON 5.6 5% 1/4W
R628	1-249-390-11	s	CARBON 5.6 5% 1/4W
R629	1-249-390-11	s	CARBON 5.6 5% 1/4W
R630	1-249-390-11	s	CARBON 5.6 5% 1/4W
R631	1-249-389-11	s	CARBON 4.7 5% 1/4W
R632	1-216-679-11	s	METAL, CHIP 15K 0.5% 1/10W
R633	1-249-389-11	s	CARBON 4.7 5% 1/4W
R634	1-216-073-00	s	METAL, CHIP 10K 5% 1/10W
R635	1-216-631-11	s	METAL, CHIP 150 0.5% 1/10W
R636	1-216-679-11	s	METAL, CHIP 15K 0.5% 1/10W
R637	1-216-073-00	s	METAL, CHIP 10K 5% 1/10W
R638	1-216-631-11	s	METAL, CHIP 150 0.5% 1/10W
R639	1-216-675-11	s	METAL, CHIP 10K 0.5% 1/10W
R640	1-216-675-11	s	METAL, CHIP 10K 0.5% 1/10W
R641	1-216-675-11	s	METAL, CHIP 10K 0.5% 1/10W
R642	1-216-675-11	s	METAL, CHIP 10K 0.5% 1/10W
R643	1-216-653-11	s	METAL, CHIP 1.2K 0.5% 1/10W

(AU-145 BOARD)

Ref. No. or Q'ty	Part No.	SP	Description
R644	1-216-610-11	s	METAL FILM CHIP 20 0.50% 1/10W
R645	1-216-614-11	s	METAL, CHIP 30 0.50% 1/10W
R703	1-216-669-11	s	METAL, CHIP 5.1K 0.5% 1/10W
R704	1-216-061-00	s	METAL, CHIP 3.3K 5% 1/10W
R801	1-249-411-11	s	CARBON 330 5% 1/4W
R802	1-249-411-11	s	CARBON 330 5% 1/4W
R803	1-249-411-11	s	CARBON 330 5% 1/4W
R804	1-249-411-11	s	CARBON 330 5% 1/4W
R805	1-249-411-11	s	CARBON 330 5% 1/4W
R806	1-249-411-11	s	CARBON 330 5% 1/4W
RV101	1-238-786-11	s	RES, ADJ METAL 5K
RV201	1-238-786-11	s	RES, ADJ METAL 5K
RV301	1-238-786-11	s	RES, ADJ METAL 5K
RV401	1-238-786-11	s	RES, ADJ METAL 5K
RV501	1-238-786-11	s	RES, ADJ METAL 5K
RV601	1-238-786-11	s	RES, ADJ METAL 5K

AU-146P BOARD

Ref. No. or Q'ty	Part No.	SP	Description
1pc	A-6713-460-A	o	MOUNTED CIRCUIT BOARD, AU-146P
2pcs	1-568-613-11	o	SOCKET, SIL 2P
2pcs	1-573-201-11	s	SOCKET, SIL 5P
1pc	1-568-616-11	o	SOCKET, SIL 6P
C101	1-126-669-11	s	ELECT 10uF 20% 16V
C121	1-130-487-00	s	MYLAR 0.022uF 5% 50V
C122	1-130-487-00	s	MYLAR 0.022uF 5% 50V
C123	1-130-488-00	s	MYLAR 0.027uF 5% 50V
C124	1-130-488-00	s	MYLAR 0.027uF 5% 50V
C125	1-130-491-00	s	MYLAR 0.047uF 5% 50V
C126	1-130-491-00	s	MYLAR 0.047uF 5% 50V
C127	1-163-235-11	s	CERAMIC, CHIP 22PF 5% 50V
C128	1-130-485-00	s	MYLAR 0.015uF 5% 50V
C129	1-124-907-11	s	ELECT 10uF 20% 50V
C151	1-124-907-11	s	ELECT 10uF 20% 50V
C152	1-124-907-11	s	ELECT 10uF 20% 50V
C181	1-124-907-11	s	ELECT 10uF 20% 50V
C201	1-126-669-11	s	ELECT 10uF 20% 16V
C221	1-130-487-00	s	MYLAR 0.022uF 5% 50V
C222	1-130-487-00	s	MYLAR 0.022uF 5% 50V
C223	1-130-488-00	s	MYLAR 0.027uF 5% 50V
C224	1-130-488-00	s	MYLAR 0.027uF 5% 50V
C225	1-130-487-00	s	MYLAR 0.022uF 5% 50V
C226	1-130-487-00	s	MYLAR 0.022uF 5% 50V
C227	1-163-235-11	s	CERAMIC, CHIP 22PF 5% 50V
C228	1-130-485-00	s	MYLAR 0.015uF 5% 50V
C229	1-124-907-11	s	ELECT 10uF 20% 50V
C251	1-124-907-11	s	ELECT 10uF 20% 50V
C252	1-124-907-11	s	ELECT 10uF 20% 50V
C281	1-124-907-11	s	ELECT 10uF 20% 50V
C301	1-126-669-11	s	ELECT 10uF 20% 16V
C351	1-124-477-11	s	ELECT 47uF 20% 25V
C352	1-163-833-00	s	CERAMIC, CHIP 0.068uF 25V
C353	1-124-907-11	s	ELECT 10uF 20% 50V
C354	1-124-477-11	s	ELECT 47uF 20% 25V
C355	1-124-477-11	s	ELECT 47uF 20% 25V
C401	1-126-669-11	s	ELECT 10uF 20% 16V
C451	1-124-477-11	s	ELECT 47uF 20% 25V
C452	1-163-833-00	s	CERAMIC, CHIP 0.068uF 25V
C453	1-124-907-11	s	ELECT 10uF 20% 50V
C501	1-124-907-11	s	ELECT 10uF 20% 50V
C502	1-124-907-11	s	ELECT 10uF 20% 50V
C503	1-163-245-11	s	CERAMIC 56PF 5% 50V
C504	1-163-245-11	s	CERAMIC 56PF 5% 50V
C601	1-124-907-11	s	ELECT 10uF 20% 50V
C602	1-124-907-11	s	ELECT 10uF 20% 50V
C603	1-163-245-11	s	CERAMIC 56PF 5% 50V
C604	1-163-245-11	s	CERAMIC 56PF 5% 50V
C801	1-126-103-11	s	ELECT 470uF 20% 16V
C802	1-124-477-11	s	ELECT 47uF 20% 25V
C803	1-126-103-11	s	ELECT 470uF 20% 16V
C804	1-124-477-11	s	ELECT 47uF 20% 25V
C805	1-124-477-11	s	ELECT 47uF 20% 25V
C806	1-163-989-11	s	CERAMIC 0.033uF 10% 25V
C807	1-163-989-11	s	CERAMIC 0.033uF 10% 25V
C808	1-163-989-11	s	CERAMIC 0.033uF 10% 25V
C809	1-163-989-11	s	CERAMIC 0.033uF 10% 25V
C810	1-124-907-11	s	ELECT 10uF 20% 50V
C811	1-124-907-11	s	ELECT 10uF 20% 50V

(AU-146P BOARD)

Ref. No. or Q'ty	Part No.	SP	Description
C812	1-124-907-11	s	ELECT 10uF 20% 50V
C813	1-124-477-11	s	ELECT 47uF 20% 25V
C814	1-124-907-11	s	ELECT 10uF 20% 50V
C815	1-124-477-11	s	ELECT 47uF 20% 25V
C816	1-163-989-11	s	CERAMIC 0.033uF 10% 25V
C817	1-163-989-11	s	CERAMIC 0.033uF 10% 25V
C901	1-163-989-11	s	CERAMIC 0.033uF 10% 25V
C902	1-163-989-11	s	CERAMIC 0.033uF 10% 25V
C903	1-163-989-11	s	CERAMIC 0.033uF 10% 25V
C904	1-163-989-11	s	CERAMIC 0.033uF 10% 25V
C905	1-163-989-11	s	CERAMIC 0.033uF 10% 25V
C906	1-163-989-11	s	CERAMIC 0.033uF 10% 25V
C907	1-163-809-11	s	CERAMIC, CHIP 0.047uF 10% 25V
C911	1-163-809-11	s	CERAMIC, CHIP 0.047uF 10% 25V
C912	1-163-809-11	s	CERAMIC, CHIP 0.047uF 10% 25V
C913	1-163-809-11	s	CERAMIC, CHIP 0.047uF 10% 25V
C914	1-163-809-11	s	CERAMIC, CHIP 0.047uF 10% 25V
C915	1-163-809-11	s	CERAMIC, CHIP 0.047uF 10% 25V
C916	1-163-989-11	s	CERAMIC 0.033uF 10% 25V
C917	1-163-989-11	s	CERAMIC 0.033uF 10% 25V
CN112	1-573-782-21	o	CONNECTOR, PHEC 60P, MALE
CN113	1-573-782-21	o	CONNECTOR, PHEC 60P, MALE
COP901	1-565-413-11	o	PLUG, SHORTING
COR901	1-566-386-11	s	CONNECTOR, 8P, MALE
D101	8-719-800-76	s	DIODE 1SS226
D201	8-719-800-76	s	DIODE 1SS226
D301	8-719-800-76	s	DIODE 1SS226
D302	8-719-800-76	s	DIODE 1SS226
D401	8-719-800-76	s	DIODE 1SS226
D402	8-719-800-76	s	DIODE 1SS226
D501	8-719-800-76	s	DIODE 1SS226
D502	8-719-800-76	s	DIODE 1SS226
D503	8-719-800-76	s	DIODE 1SS226
D601	8-719-800-76	s	DIODE 1SS226
D602	8-719-800-76	s	DIODE 1SS226
D603	8-719-800-76	s	DIODE 1SS226
D801	8-719-123-85	s	DIODE 1SS304
D901	8-719-123-85	s	DIODE 1SS304
D902	8-719-123-85	s	DIODE 1SS304
D903	8-719-123-85	s	DIODE 1SS304
D904	8-719-123-85	s	DIODE 1SS304
D905	8-719-123-85	s	DIODE 1SS304
D906	8-719-123-85	s	DIODE 1SS304
D907	8-719-123-85	s	DIODE 1SS304
D911	8-719-123-85	s	DIODE 1SS304
D912	8-719-123-85	s	DIODE 1SS304
D913	8-719-123-85	s	DIODE 1SS304
D914	8-719-123-85	s	DIODE 1SS304
D915	8-719-123-85	s	DIODE 1SS304
FL351	1-236-171-11	s	FILTER, LOW-PASS
IC101	8-759-106-02	s	IC UPC4570G2
IC102	8-759-982-04	s	IC RC5532M
IC121	8-759-106-02	s	IC UPC4570G2
IC122	8-759-106-02	s	IC UPC4570G2
IC123	8-759-106-02	s	IC UPC4570G2
IC151	8-759-106-02	s	IC UPC4570G2

(AU-146P BOARD)

Ref. No. or Q'ty	Part No.	SP	Description
IC152	8-759-982-04	s	IC RC5532M
IC181	8-759-106-02	s	IC UPC4570G2
IC201	8-759-106-02	s	IC UPC4570G2
IC202	8-759-982-04	s	IC RC5532M
IC221	8-759-106-02	s	IC UPC4570G2
IC222	8-759-106-02	s	IC UPC4570G2
IC223	8-759-106-02	s	IC UPC4570G2
IC251	8-759-106-02	s	IC UPC4570G2
IC252	8-759-982-04	s	IC RC5532M
IC281	8-759-106-02	s	IC UPC4570G2
IC301	8-759-106-02	s	IC UPC4570G2
IC302	8-759-982-04	s	IC RC5532M
IC351	8-759-106-02	s	IC UPC4570G2
IC352	8-741-164-50	s	IC SSK1645-01
IC353	8-759-908-16	s	IC TL072CPS
IC354	8-759-106-02	s	IC UPC4570G2
IC401	8-759-106-02	s	IC UPC4570G2
IC402	8-759-982-04	s	IC RC5532M
IC501	8-759-106-02	s	IC UPC4570G2
IC502	8-759-106-02	s	IC UPC4570G2
IC503	8-759-982-04	s	IC RC5532M
IC504	8-759-106-02	s	IC UPC4570G2
IC801	8-759-106-02	s	IC UPC4570G2
IC802	8-759-106-02	s	IC UPC4570G2
IC803	8-759-982-04	s	IC RC5532M
IC804	8-759-106-02	s	IC UPC4570G2
IC901	8-759-982-21	s	IC RC78L05A
IC902	8-759-982-44	s	IC RC79L05A
IC901	8-757-991-00	s	IC CX7991
IC902	8-757-991-00	s	IC CX7991
IC903	8-759-009-19	s	IC MC14081BF
IC904	8-759-008-79	s	IC MC14011BF
IC905	8-759-927-29	s	IC SN74HCUD4NS
IC906	8-759-925-80	s	IC SN74HC14NS
L801	1-412-533-11	s	INDUCTOR 47uH
L802	1-412-533-11	s	INDUCTOR 47uH
Q101	8-729-205-38	s	TRANSISTOR 2SK208-Y
Q102	8-729-203-30	s	TRANSISTOR 2SJ106-Y
Q151	8-729-109-44	s	TRANSISTOR 2SK94
Q152	8-729-209-07	s	TRANSISTOR 2SC4213-B
Q181	8-729-109-44	s	TRANSISTOR 2SK94
Q201	8-729-205-38	s	TRANSISTOR 2SK208-Y
Q202	8-729-203-30	s	TRANSISTOR 2SJ106-Y
Q251	8-729-109-44	s	TRANSISTOR 2SK94
Q252	8-729-209-07	s	TRANSISTOR 2SC4213-B
Q281	8-729-109-44	s	TRANSISTOR 2SK94
Q301	8-729-205-38	s	TRANSISTOR 2SK208-Y
Q302	8-729-203-30	s	TRANSISTOR 2SJ106-Y
Q303	8-729-205-38	s	TRANSISTOR 2SK208-Y
Q304	8-729-203-30	s	TRANSISTOR 2SJ106-Y
Q351	8-729-109-44	s	TRANSISTOR 2SK94
Q401	8-729-205-38	s	TRANSISTOR 2SK208-Y
Q402	8-729-203-30	s	TRANSISTOR 2SJ106-Y
Q403	8-729-205-38	s	TRANSISTOR 2SK208-Y
Q404	8-729-203-30	s	TRANSISTOR 2SJ106-Y
Q451	8-729-109-44	s	TRANSISTOR 2SK94
Q501	8-729-205-38	s	TRANSISTOR 2SK208-Y
Q502	8-729-203-30	s	TRANSISTOR 2SJ106-Y

(AU-146P BOARD)

Ref. No. or Q'ty	Part No.	SP	Description
Q503	8-729-205-38	s	TRANSISTOR 2SK208-Y
Q504	8-729-203-30	s	TRANSISTOR 2SJ106-Y
Q505	8-729-205-38	s	TRANSISTOR 2SK208-Y
Q506	8-729-203-30	s	TRANSISTOR 2SJ106-Y
Q601	8-729-205-38	s	TRANSISTOR 2SK208-Y
Q602	8-729-203-30	s	TRANSISTOR 2SJ106-Y
Q603	8-729-205-38	s	TRANSISTOR 2SK208-Y
Q604	8-729-203-30	s	TRANSISTOR 2SJ106-Y
Q605	8-729-205-38	s	TRANSISTOR 2SK208-Y
Q606	8-729-203-30	s	TRANSISTOR 2SJ106-Y
Q801	8-729-116-83	s	TRANSISTOR 2SD1616-K
Q802	8-729-424-00	s	TRANSISTOR 2SB324
Q803	8-729-117-32	s	TRANSISTOR 2SC4177
Q804	8-729-117-32	s	TRANSISTOR 2SC4177
Q805	8-729-117-16	s	TRANSISTOR 2SA1611-M6
Q806	8-729-117-16	s	TRANSISTOR 2SA1611-M6
Q901	8-729-117-32	s	TRANSISTOR 2SC4177
Q903	8-729-117-32	s	TRANSISTOR 2SC4177
Q905	8-729-117-32	s	TRANSISTOR 2SC4177
Q907	8-729-117-32	s	TRANSISTOR 2SC4177
Q909	8-729-905-12	s	TRANSISTOR DTA144EU
Q910	8-729-905-12	s	TRANSISTOR DTA144EU
Q911	8-729-905-12	s	TRANSISTOR DTA144EU
Q912	8-729-905-12	s	TRANSISTOR DTA144EU
Q913	8-729-905-18	s	TRANSISTOR DTC144EU
Q914	8-729-905-12	s	TRANSISTOR DTA144EU
Q915	8-729-905-18	s	TRANSISTOR DTC144EU
Q916	8-729-117-16	s	TRANSISTOR 2SA1611-M6
Q917	8-729-905-18	s	TRANSISTOR DTC144EU
Q918	8-729-117-16	s	TRANSISTOR 2SA1611-M6
Q919	8-729-905-18	s	TRANSISTOR DTC144EU
Q920	8-729-117-16	s	TRANSISTOR 2SA1611-M6
Q921	8-729-905-18	s	TRANSISTOR DTC144EU
Q922	8-729-117-16	s	TRANSISTOR 2SA1611-M6
Q923	8-729-905-18	s	TRANSISTOR DTC144EU
Q924	8-729-117-16	s	TRANSISTOR 2SA1611-M6
Q925	8-729-905-18	s	TRANSISTOR DTC144EU
Q926	8-729-117-16	s	TRANSISTOR 2SA1611-M6
Q927	8-729-905-18	s	TRANSISTOR DTC144EU
Q928	8-729-117-16	s	TRANSISTOR 2SA1611-M6
Q929	8-729-905-18	s	TRANSISTOR DTC144EU
Q930	8-729-117-16	s	TRANSISTOR 2SA1611-M6
Q931	8-729-905-18	s	TRANSISTOR DTC144EU
Q932	8-729-117-16	s	TRANSISTOR 2SA1611-M6
Q933	8-729-905-18	s	TRANSISTOR DTC144EU
Q934	8-729-117-16	s	TRANSISTOR 2SA1611-M6
Q935	8-729-905-18	s	TRANSISTOR DTC144EU
Q936	8-729-905-18	s	TRANSISTOR DTC144EU
Q937	8-729-117-16	s	TRANSISTOR 2SA1611-M6
Q938	8-729-905-18	s	TRANSISTOR DTC144EU
Q939	8-729-905-18	s	TRANSISTOR DTC144EU
Q940	8-729-117-16	s	TRANSISTOR 2SA1611-M6
R101	1-216-675-11	s	METAL, CHIP 10K 0.5% 1/10W
R102	1-216-675-11	s	METAL, CHIP 10K 0.5% 1/10W
R103	1-216-675-11	s	METAL, CHIP 10K 0.5% 1/10W
R104	1-216-675-11	s	METAL, CHIP 10K 0.5% 1/10W
R105	1-216-675-11	s	METAL, CHIP 10K 0.5% 1/10W
R106	1-216-675-11	s	METAL, CHIP 10K 0.5% 1/10W

(AU-146P BOARD)

Ref. No. or Q'ty	Part No.	SP	Description
R107	1-216-675-11	s	METAL, CHIP 10K 0.5% 1/10W
R108	1-216-675-11	s	METAL, CHIP 10K 0.5% 1/10W
R109	1-216-121-00	s	METAL, CHIP 1M 5% 1/10W
R110	1-216-121-00	s	METAL, CHIP 1M 5% 1/10W
R111	1-216-121-00	s	METAL, CHIP 1M 5% 1/10W
R112	1-216-121-00	s	METAL, CHIP 1M 5% 1/10W
R113	1-216-683-11	s	METAL, CHIP 22K 0.5% 1/10W
R114	1-216-683-11	s	METAL, CHIP 22K 0.5% 1/10W
R115	1-216-651-11	s	METAL, CHIP 1K 0.5% 1/10W
R116	1-216-661-11	s	METAL, CHIP 2.7K 0.5% 1/10W
R117	1-216-081-00	s	METAL, CHIP 22K 5% 1/10W
R118	1-216-049-00	s	METAL, CHIP 1K 5% 1/10W
R121	1-216-675-11	s	METAL, CHIP 10K 0.5% 1/10W
R122	1-216-675-11	s	METAL, CHIP 10K 0.5% 1/10W
R123	1-216-675-11	s	METAL, CHIP 10K 0.5% 1/10W
R124	1-216-675-11	s	METAL, CHIP 10K 0.5% 1/10W
R125	1-216-691-11	s	METAL, CHIP 47K 0.5% 1/10W
R126	1-216-675-11	s	METAL, CHIP 10K 0.5% 1/10W
R127	1-216-101-00	s	METAL, CHIP 150K 5% 1/10W
R128	1-216-081-00	s	METAL, CHIP 22K 5% 1/10W
R129	1-216-099-00	s	METAL, CHIP 120K 5% 1/10W
R130	1-216-073-00	s	METAL, CHIP 10K 5% 1/10W
R131	1-216-102-00	s	METAL, CHIP 180K 5% 1/10W
R132	1-216-083-00	s	METAL, CHIP 27K 5% 1/10W
R133	1-216-683-11	s	METAL, CHIP 22K 0.5% 1/10W
R134	1-216-097-00	s	METAL, CHIP 100K 5% 1/10W
R135	1-216-105-00	s	METAL, CHIP 220K 5% 1/10W
R136	1-216-097-00	s	METAL, CHIP 100K 5% 1/10W
R137	1-216-675-11	s	METAL, CHIP 10K 0.5% 1/10W
R138	1-216-683-11	s	METAL, CHIP 22K 0.5% 1/10W
R139	1-216-675-11	s	METAL, CHIP 10K 0.5% 1/10W
R140	1-216-675-11	s	METAL, CHIP 10K 0.5% 1/10W
R141	1-216-049-00	s	METAL, CHIP 1K 5% 1/10W
R142	1-216-081-00	s	METAL, CHIP 22K 5% 1/10W
R151	1-216-675-11	s	METAL, CHIP 10K 0.5% 1/10W
R152	1-216-675-11	s	METAL, CHIP 10K 0.5% 1/10W
R153	1-216-675-11	s	METAL, CHIP 10K 0.5% 1/10W
R154	1-216-675-11	s	METAL, CHIP 10K 0.5% 1/10W
R155	1-216-121-00	s	METAL, CHIP 1M 5% 1/10W
R156	1-216-121-00	s	METAL, CHIP 1M 5% 1/10W
R157	1-216-661-11	s	METAL, CHIP 2.7K 0.5% 1/10W
R159	1-216-675-11	s	METAL, CHIP 10K 0.5% 1/10W
R160	1-216-675-11	s	METAL, CHIP 10K 0.5% 1/10W
R161	1-216-081-00	s	METAL, CHIP 22K 5% 1/10W
R162	1-216-675-11	s	METAL, CHIP 10K 0.5% 1/10W
R163	1-216-675-11	s	METAL, CHIP 10K 0.5% 1/10W
R164	1-216-081-00	s	METAL, CHIP 22K 5% 1/10W
R165	1-216-073-00	s	METAL, CHIP 10K 5% 1/10W
R181	1-216-675-11	s	METAL, CHIP 10K 0.5% 1/10W
R182	1-216-675-11	s	METAL, CHIP 10K 0.5% 1/10W
R183	1-216-675-11	s	METAL, CHIP 10K 0.5% 1/10W
R184	1-216-675-11	s	METAL, CHIP 10K 0.5% 1/10W
R185	1-216-675-11	s	METAL, CHIP 10K 0.5% 1/10W
R186	1-216-675-11	s	METAL, CHIP 10K 0.5% 1/10W
R187	1-216-121-00	s	METAL, CHIP 1M 5% 1/10W
R188	1-216-121-00	s	METAL, CHIP 1M 5% 1/10W
R201	1-216-675-11	s	METAL, CHIP 10K 0.5% 1/10W
R202	1-216-675-11	s	METAL, CHIP 10K 0.5% 1/10W
R203	1-216-675-11	s	METAL, CHIP 10K 0.5% 1/10W

(AU-146P BOARD)

Ref. No. or Q'ty	Part No.	SP	Description
R204	1-216-675-11	s	METAL, CHIP 10K 0.5% 1/10W
R205	1-216-675-11	s	METAL, CHIP 10K 0.5% 1/10W
R206	1-216-675-11	s	METAL, CHIP 10K 0.5% 1/10W
R207	1-216-675-11	s	METAL, CHIP 10K 0.5% 1/10W
R208	1-216-675-11	s	METAL, CHIP 10K 0.5% 1/10W
R209	1-216-121-00	s	METAL, CHIP 1M 5% 1/10W
R210	1-216-121-00	s	METAL, CHIP 1M 5% 1/10W
R211	1-216-121-00	s	METAL, CHIP 1M 5% 1/10W
R212	1-216-121-00	s	METAL, CHIP 1M 5% 1/10W
R213	1-216-683-11	s	METAL, CHIP 22K 0.5% 1/10W
R214	1-216-683-11	s	METAL, CHIP 22K 0.5% 1/10W
R215	1-216-651-11	s	METAL, CHIP 1K 0.5% 1/10W
R216	1-216-661-11	s	METAL, CHIP 2.7K 0.5% 1/10W
R217	1-216-081-00	s	METAL, CHIP 22K 5% 1/10W
R218	1-216-049-00	s	METAL, CHIP 1K 5% 1/10W
R221	1-216-675-11	s	METAL, CHIP 10K 0.5% 1/10W
R222	1-216-675-11	s	METAL, CHIP 10K 0.5% 1/10W
R223	1-216-675-11	s	METAL, CHIP 10K 0.5% 1/10W
R224	1-216-675-11	s	METAL, CHIP 10K 0.5% 1/10W
R225	1-216-691-11	s	METAL, CHIP 47K 0.5% 1/10W
R226	1-216-675-11	s	METAL, CHIP 10K 0.5% 1/10W
R227	1-216-101-00	s	METAL, CHIP 150K 5% 1/10W
R228	1-216-081-00	s	METAL, CHIP 22K 5% 1/10W
R229	1-216-099-00	s	METAL, CHIP 120K 5% 1/10W
R230	1-216-073-00	s	METAL, CHIP 10K 5% 1/10W
R231	1-216-099-00	s	METAL, CHIP 120K 5% 1/10W
R232	1-216-089-00	s	METAL, CHIP 47K 5% 1/10W
R233	1-216-683-11	s	METAL, CHIP 22K 0.5% 1/10W
R234	1-216-105-00	s	METAL, CHIP 220K 5% 1/10W
R235	1-216-119-00	s	METAL, CHIP 820K 5% 1/10W
R236	1-216-102-00	s	METAL, CHIP 180K 5% 1/10W
R237	1-216-675-11	s	METAL, CHIP 10K 0.5% 1/10W
R238	1-216-683-11	s	METAL, CHIP 22K 0.5% 1/10W
R239	1-216-675-11	s	METAL, CHIP 10K 0.5% 1/10W
R240	1-216-675-11	s	METAL, CHIP 10K 0.5% 1/10W
R241	1-216-049-00	s	METAL, CHIP 1K 5% 1/10W
R242	1-216-081-00	s	METAL, CHIP 22K 5% 1/10W
R251	1-216-675-11	s	METAL, CHIP 10K 0.5% 1/10W
R252	1-216-675-11	s	METAL, CHIP 10K 0.5% 1/10W
R253	1-216-675-11	s	METAL, CHIP 10K 0.5% 1/10W
R254	1-216-675-11	s	METAL, CHIP 10K 0.5% 1/10W
R255	1-216-121-00	s	METAL, CHIP 1M 5% 1/10W
R256	1-216-121-00	s	METAL, CHIP 1M 5% 1/10W
R257	1-216-661-11	s	METAL, CHIP 2.7K 0.5% 1/10W
R259	1-216-675-11	s	METAL, CHIP 10K 0.5% 1/10W
R260	1-216-675-11	s	METAL, CHIP 10K 0.5% 1/10W
R261	1-216-081-00	s	METAL, CHIP 22K 5% 1/10W
R262	1-216-675-11	s	METAL, CHIP 10K 0.5% 1/10W
R263	1-216-675-11	s	METAL, CHIP 10K 0.5% 1/10W
R264	1-216-081-00	s	METAL, CHIP 22K 5% 1/10W
R265	1-216-073-00	s	METAL, CHIP 10K 5% 1/10W
R280	1-216-675-11	s	METAL, CHIP 10K 0.5% 1/10W
R281	1-216-675-11	s	METAL, CHIP 10K 0.5% 1/10W
R282	1-216-675-11	s	METAL, CHIP 10K 0.5% 1/10W
R283	1-216-675-11	s	METAL, CHIP 10K 0.5% 1/10W
R284	1-216-675-11	s	METAL, CHIP 10K 0.5% 1/10W
R285	1-216-675-11	s	METAL, CHIP 10K 0.5% 1/10W
R287	1-216-121-00	s	METAL, CHIP 1M 5% 1/10W
R288	1-216-121-00	s	METAL, CHIP 1M 5% 1/10W

(AU-146P BOARD)

Ref. No. or Q'ty	Part No.	SP	Description
R301	1-216-675-11	s	METAL, CHIP 10K 0.5% 1/10W
R302	1-216-675-11	s	METAL, CHIP 10K 0.5% 1/10W
R303	1-216-675-11	s	METAL, CHIP 10K 0.5% 1/10W
R304	1-216-675-11	s	METAL, CHIP 10K 0.5% 1/10W
R305	1-216-675-11	s	METAL, CHIP 10K 0.5% 1/10W
R306	1-216-675-11	s	METAL, CHIP 10K 0.5% 1/10W
R307	1-216-675-11	s	METAL, CHIP 10K 0.5% 1/10W
R308	1-216-675-11	s	METAL, CHIP 10K 0.5% 1/10W
R309	1-216-121-00	s	METAL, CHIP 1M 5% 1/10W
R310	1-216-121-00	s	METAL, CHIP 1M 5% 1/10W
R311	1-216-121-00	s	METAL, CHIP 1M 5% 1/10W
R312	1-216-121-00	s	METAL, CHIP 1M 5% 1/10W
R313	1-216-683-11	s	METAL, CHIP 22K 0.5% 1/10W
R314	1-216-683-11	s	METAL, CHIP 22K 0.5% 1/10W
R315	1-216-651-11	s	METAL, CHIP 1K 0.5% 1/10W
R316	1-216-661-11	s	METAL, CHIP 2.7K 0.5% 1/10W
R317	1-216-121-00	s	METAL, CHIP 1M 5% 1/10W
R318	1-216-121-00	s	METAL, CHIP 1M 5% 1/10W
R319	1-216-121-00	s	METAL, CHIP 1M 5% 1/10W
R320	1-216-121-00	s	METAL, CHIP 1M 5% 1/10W
R321	1-216-683-11	s	METAL, CHIP 22K 0.5% 1/10W
R322	1-216-683-11	s	METAL, CHIP 22K 0.5% 1/10W
R323	1-216-661-11	s	METAL, CHIP 2.7K 0.5% 1/10W
R324	1-216-661-11	s	METAL, CHIP 2.7K 0.5% 1/10W
R325	1-216-081-00	s	METAL, CHIP 22K 5% 1/10W
R351	1-216-675-11	s	METAL, CHIP 10K 0.5% 1/10W
R352	1-216-675-11	s	METAL, CHIP 10K 0.5% 1/10W
R353	1-216-675-11	s	METAL, CHIP 10K 0.5% 1/10W
R354	1-216-675-11	s	METAL, CHIP 10K 0.5% 1/10W
R355	1-216-081-00	s	METAL, CHIP 22K 5% 1/10W
R356	1-216-073-00	s	METAL, CHIP 10K 5% 1/10W
R357	1-216-049-00	s	METAL, CHIP 1K 5% 1/10W
R358	1-216-675-11	s	METAL, CHIP 10K 0.5% 1/10W
R359	1-216-675-11	s	METAL, CHIP 10K 0.5% 1/10W
R360	1-216-121-00	s	METAL, CHIP 1M 5% 1/10W
R361	1-216-121-00	s	METAL, CHIP 1M 5% 1/10W
R362	1-216-073-00	s	METAL, CHIP 10K 5% 1/10W
R401	1-216-675-11	s	METAL, CHIP 10K 0.5% 1/10W
R402	1-216-675-11	s	METAL, CHIP 10K 0.5% 1/10W
R403	1-216-675-11	s	METAL, CHIP 10K 0.5% 1/10W
R404	1-216-675-11	s	METAL, CHIP 10K 0.5% 1/10W
R405	1-216-675-11	s	METAL, CHIP 10K 0.5% 1/10W
R406	1-216-675-11	s	METAL, CHIP 10K 0.5% 1/10W
R407	1-216-675-11	s	METAL, CHIP 10K 0.5% 1/10W
R408	1-216-675-11	s	METAL, CHIP 10K 0.5% 1/10W
R409	1-216-121-00	s	METAL, CHIP 1M 5% 1/10W
R410	1-216-121-00	s	METAL, CHIP 1M 5% 1/10W
R411	1-216-121-00	s	METAL, CHIP 1M 5% 1/10W
R412	1-216-121-00	s	METAL, CHIP 1M 5% 1/10W
R413	1-216-683-11	s	METAL, CHIP 22K 0.5% 1/10W
R414	1-216-683-11	s	METAL, CHIP 22K 0.5% 1/10W
R415	1-216-651-11	s	METAL, CHIP 1K 0.5% 1/10W
R416	1-216-661-11	s	METAL, CHIP 2.7K 0.5% 1/10W
R417	1-216-121-00	s	METAL, CHIP 1M 5% 1/10W
R418	1-216-121-00	s	METAL, CHIP 1M 5% 1/10W
R419	1-216-121-00	s	METAL, CHIP 1M 5% 1/10W
R420	1-216-121-00	s	METAL, CHIP 1M 5% 1/10W
R421	1-216-683-11	s	METAL, CHIP 22K 0.5% 1/10W
R422	1-216-683-11	s	METAL, CHIP 22K 0.5% 1/10W

(AU-146P BOARD)

Ref. No. or Q'ty	Part No.	SP	Description
R423	1-216-661-11	s	METAL, CHIP 2.7K 0.5% 1/10W
R424	1-216-661-11	s	METAL, CHIP 2.7K 0.5% 1/10W
R425	1-216-081-00	s	METAL, CHIP 22K 5% 1/10W
R451	1-216-675-11	s	METAL, CHIP 10K 0.5% 1/10W
R452	1-216-675-11	s	METAL, CHIP 10K 0.5% 1/10W
R453	1-216-675-11	s	METAL, CHIP 10K 0.5% 1/10W
R454	1-216-675-11	s	METAL, CHIP 10K 0.5% 1/10W
R455	1-216-081-00	s	METAL, CHIP 22K 5% 1/10W
R456	1-216-073-00	s	METAL, CHIP 10K 5% 1/10W
R457	1-216-049-00	s	METAL, CHIP 1K 5% 1/10W
R458	1-216-675-11	s	METAL, CHIP 10K 0.5% 1/10W
R459	1-216-675-11	s	METAL, CHIP 10K 0.5% 1/10W
R460	1-216-121-00	s	METAL, CHIP 1M 5% 1/10W
R461	1-216-121-00	s	METAL, CHIP 1M 5% 1/10W
R462	1-216-073-00	s	METAL, CHIP 10K 5% 1/10W
R501	1-216-675-11	s	METAL, CHIP 10K 0.5% 1/10W
R502	1-216-675-11	s	METAL, CHIP 10K 0.5% 1/10W
R503	1-216-675-11	s	METAL, CHIP 10K 0.5% 1/10W
R504	1-216-675-11	s	METAL, CHIP 10K 0.5% 1/10W
R505	1-216-675-11	s	METAL, CHIP 10K 0.5% 1/10W
R506	1-216-675-11	s	METAL, CHIP 10K 0.5% 1/10W
R507	1-216-675-11	s	METAL, CHIP 10K 0.5% 1/10W
R508	1-216-675-11	s	METAL, CHIP 10K 0.5% 1/10W
R509	1-216-121-00	s	METAL, CHIP 1M 5% 1/10W
R510	1-216-121-00	s	METAL, CHIP 1M 5% 1/10W
R511	1-216-121-00	s	METAL, CHIP 1M 5% 1/10W
R512	1-216-121-00	s	METAL, CHIP 1M 5% 1/10W
R513	1-216-683-11	s	METAL, CHIP 22K 0.5% 1/10W
R514	1-216-683-11	s	METAL, CHIP 22K 0.5% 1/10W
R515	1-216-675-11	s	METAL, CHIP 10K 0.5% 1/10W
R516	1-216-675-11	s	METAL, CHIP 10K 0.5% 1/10W
R517	1-216-121-00	s	METAL, CHIP 1M 5% 1/10W
R518	1-216-121-00	s	METAL, CHIP 1M 5% 1/10W
R519	1-216-121-00	s	METAL, CHIP 1M 5% 1/10W
R520	1-216-121-00	s	METAL, CHIP 1M 5% 1/10W
R521	1-216-683-11	s	METAL, CHIP 22K 0.5% 1/10W
R522	1-216-683-11	s	METAL, CHIP 22K 0.5% 1/10W
R523	1-216-675-11	s	METAL, CHIP 10K 0.5% 1/10W
R524	1-216-675-11	s	METAL, CHIP 10K 0.5% 1/10W
R525	1-216-049-00	s	METAL, CHIP 1K 5% 1/10W
R526	1-216-081-00	s	METAL, CHIP 22K 5% 1/10W
R527	1-216-675-11	s	METAL, CHIP 10K 0.5% 1/10W
R528	1-216-675-11	s	METAL, CHIP 10K 0.5% 1/10W
R529	1-216-675-11	s	METAL, CHIP 10K 0.5% 1/10W
R530	1-216-675-11	s	METAL, CHIP 10K 0.5% 1/10W
R531	1-216-121-00	s	METAL, CHIP 1M 5% 1/10W
R532	1-216-121-00	s	METAL, CHIP 1M 5% 1/10W
R533	1-216-121-00	s	METAL, CHIP 1M 5% 1/10W
R534	1-216-121-00	s	METAL, CHIP 1M 5% 1/10W
R535	1-216-683-11	s	METAL, CHIP 22K 0.5% 1/10W
R536	1-216-683-11	s	METAL, CHIP 22K 0.5% 1/10W
R537	1-216-675-11	s	METAL, CHIP 10K 0.5% 1/10W
R538	1-216-675-11	s	METAL, CHIP 10K 0.5% 1/10W
R539	1-216-081-00	s	METAL, CHIP 22K 5% 1/10W
R601	1-216-675-11	s	METAL, CHIP 10K 0.5% 1/10W
R602	1-216-675-11	s	METAL, CHIP 10K 0.5% 1/10W
R603	1-216-675-11	s	METAL, CHIP 10K 0.5% 1/10W
R604	1-216-675-11	s	METAL, CHIP 10K 0.5% 1/10W
R605	1-216-675-11	s	METAL, CHIP 10K 0.5% 1/10W

(AU-146P BOARD)

Ref. No. or Q'ty	Part No.	SP	Description
R606	1-216-675-11	s	METAL, CHIP 10K 0.5% 1/10W
R607	1-216-675-11	s	METAL, CHIP 10K 0.5% 1/10W
R608	1-216-675-11	s	METAL, CHIP 10K 0.5% 1/10W
R609	1-216-121-00	s	METAL, CHIP 1M 5% 1/10W
R610	1-216-121-00	s	METAL, CHIP 1M 5% 1/10W
R611	1-216-121-00	s	METAL, CHIP 1M 5% 1/10W
R612	1-216-121-00	s	METAL, CHIP 1M 5% 1/10W
R613	1-216-683-11	s	METAL, CHIP 22K 0.5% 1/10W
R614	1-216-683-11	s	METAL, CHIP 22K 0.5% 1/10W
R615	1-216-675-11	s	METAL, CHIP 10K 0.5% 1/10W
R616	1-216-675-11	s	METAL, CHIP 10K 0.5% 1/10W
R617	1-216-121-00	s	METAL, CHIP 1M 5% 1/10W
R618	1-216-121-00	s	METAL, CHIP 1M 5% 1/10W
R619	1-216-121-00	s	METAL, CHIP 1M 5% 1/10W
R620	1-216-121-00	s	METAL, CHIP 1M 5% 1/10W
R621	1-216-683-11	s	METAL, CHIP 22K 0.5% 1/10W
R622	1-216-683-11	s	METAL, CHIP 22K 0.5% 1/10W
R623	1-216-675-11	s	METAL, CHIP 10K 0.5% 1/10W
R624	1-216-675-11	s	METAL, CHIP 10K 0.5% 1/10W
R625	1-216-049-00	s	METAL, CHIP 1K 5% 1/10W
R626	1-216-081-00	s	METAL, CHIP 22K 5% 1/10W
R627	1-216-675-11	s	METAL, CHIP 10K 0.5% 1/10W
R628	1-216-675-11	s	METAL, CHIP 10K 0.5% 1/10W
R629	1-216-675-11	s	METAL, CHIP 10K 0.5% 1/10W
R630	1-216-675-11	s	METAL, CHIP 10K 0.5% 1/10W
R631	1-216-121-00	s	METAL, CHIP 1M 5% 1/10W
R632	1-216-121-00	s	METAL, CHIP 1M 5% 1/10W
R633	1-216-121-00	s	METAL, CHIP 1M 5% 1/10W
R634	1-216-121-00	s	METAL, CHIP 1M 5% 1/10W
R635	1-216-683-11	s	METAL, CHIP 22K 0.5% 1/10W
R636	1-216-683-11	s	METAL, CHIP 22K 0.5% 1/10W
R637	1-216-675-11	s	METAL, CHIP 10K 0.5% 1/10W
R638	1-216-675-11	s	METAL, CHIP 10K 0.5% 1/10W
R639	1-216-081-00	s	METAL, CHIP 22K 5% 1/10W
R801	1-249-411-11	s	CARBON 330 5% 1/4W
R802	1-249-411-11	s	CARBON 330 5% 1/4W
R803	1-216-073-00	s	METAL, CHIP 10K 5% 1/10W
R804	1-216-073-00	s	METAL, CHIP 10K 5% 1/10W
R805	1-216-097-00	s	METAL, CHIP 100K 5% 1/10W
R806	1-216-089-00	s	METAL, CHIP 47K 5% 1/10W
R807	1-216-073-00	s	METAL, CHIP 10K 5% 1/10W
R808	1-216-073-00	s	METAL, CHIP 10K 5% 1/10W
R809	1-216-097-00	s	METAL, CHIP 100K 5% 1/10W
R830	1-216-049-00	s	METAL, CHIP 1K 5% 1/10W
R831	1-216-636-11	s	METAL, CHIP 240 0.5% 1/10W
R832	1-216-049-00	s	METAL, CHIP 1K 5% 1/10W
R833	1-216-634-11	s	METAL, CHIP 200 0.5% 1/10W
R901	1-216-097-00	s	METAL, CHIP 100K 5% 1/10W
R902	1-216-041-00	s	METAL, CHIP 470 5% 1/10W
R903	1-216-674-11	s	METAL, CHIP 9.1K 0.5% 1/10W
R904	1-216-075-00	s	METAL, CHIP 12K 5% 1/10W
R906	1-216-041-00	s	METAL, CHIP 470 5% 1/10W
R907	1-216-674-11	s	METAL, CHIP 9.1K 0.5% 1/10W
R908	1-216-075-00	s	METAL, CHIP 12K 5% 1/10W
R910	1-216-061-00	s	METAL, CHIP 3.3K 5% 1/10W
R911	1-216-067-00	s	METAL, CHIP 5.6K 5% 1/10W
R913	1-216-061-00	s	METAL, CHIP 3.3K 5% 1/10W
R914	1-216-067-00	s	METAL, CHIP 5.6K 5% 1/10W
R916	1-216-049-00	s	METAL, CHIP 1K 5% 1/10W

(AU-146P BOARD)

Ref. No. or Q'ty	Part No.	SP	Description
R917	1-216-049-00	s	METAL, CHIP 1K 5% 1/10W
R918	1-216-049-00	s	METAL, CHIP 1K 5% 1/10W
R919	1-216-049-00	s	METAL, CHIP 1K 5% 1/10W
R920	1-216-073-00	s	METAL, CHIP 10K 5% 1/10W
R921	1-216-049-00	s	METAL, CHIP 1K 5% 1/10W
R922	1-216-089-00	s	METAL, CHIP 47K 5% 1/10W
R923	1-216-748-11	s	METAL, CHIP 39K 1% 1/10W
R924	1-216-065-00	s	METAL, CHIP 4.7K 5% 1/10W
R925	1-216-089-00	s	METAL, CHIP 47K 5% 1/10W
R926	1-216-089-00	s	METAL, CHIP 47K 5% 1/10W
R927	1-216-089-00	s	METAL, CHIP 47K 5% 1/10W
R928	1-216-748-11	s	METAL, CHIP 39K 1% 1/10W
R929	1-216-065-00	s	METAL, CHIP 4.7K 5% 1/10W
R930	1-216-089-00	s	METAL, CHIP 47K 5% 1/10W
R931	1-216-049-00	s	METAL, CHIP 1K 5% 1/10W
R932	1-216-089-00	s	METAL, CHIP 47K 5% 1/10W
R933	1-216-748-11	s	METAL, CHIP 39K 1% 1/10W
R934	1-216-065-00	s	METAL, CHIP 4.7K 5% 1/10W
R935	1-216-089-00	s	METAL, CHIP 47K 5% 1/10W
R936	1-216-748-11	s	METAL, CHIP 39K 1% 1/10W
R937	1-216-065-00	s	METAL, CHIP 4.7K 5% 1/10W
R938	1-216-089-00	s	METAL, CHIP 47K 5% 1/10W
R939	1-216-049-00	s	METAL, CHIP 1K 5% 1/10W
R940	1-216-073-00	s	METAL, CHIP 10K 5% 1/10W
R941	1-216-049-00	s	METAL, CHIP 1K 5% 1/10W
R942	1-216-073-00	s	METAL, CHIP 10K 5% 1/10W
R943	1-216-049-00	s	METAL, CHIP 1K 5% 1/10W
R945	1-216-089-00	s	METAL, CHIP 47K 5% 1/10W
R946	1-216-748-11	s	METAL, CHIP 39K 1% 1/10W
R947	1-216-065-00	s	METAL, CHIP 4.7K 5% 1/10W
R948	1-216-089-00	s	METAL, CHIP 47K 5% 1/10W
R949	1-216-089-00	s	METAL, CHIP 47K 5% 1/10W
R950	1-216-748-11	s	METAL, CHIP 39K 1% 1/10W
R951	1-216-065-00	s	METAL, CHIP 4.7K 5% 1/10W
R952	1-216-089-00	s	METAL, CHIP 47K 5% 1/10W
R953	1-216-097-00	s	METAL, CHIP 100K 5% 1/10W
R954	1-216-073-00	s	METAL, CHIP 10K 5% 1/10W
R955	1-216-748-11	s	METAL, CHIP 39K 1% 1/10W
R956	1-216-065-00	s	METAL, CHIP 4.7K 5% 1/10W
R957	1-216-089-00	s	METAL, CHIP 47K 5% 1/10W
R958	1-216-073-00	s	METAL, CHIP 10K 5% 1/10W
R959	1-216-748-11	s	METAL, CHIP 39K 1% 1/10W
R960	1-216-065-00	s	METAL, CHIP 4.7K 5% 1/10W
R961	1-216-089-00	s	METAL, CHIP 47K 5% 1/10W
R962	1-216-073-00	s	METAL, CHIP 10K 5% 1/10W
R963	1-216-748-11	s	METAL, CHIP 39K 1% 1/10W
R964	1-216-065-00	s	METAL, CHIP 4.7K 5% 1/10W
R965	1-216-089-00	s	METAL, CHIP 47K 5% 1/10W
R966	1-216-073-00	s	METAL, CHIP 10K 5% 1/10W
R967	1-216-748-11	s	METAL, CHIP 39K 1% 1/10W
R968	1-216-065-00	s	METAL, CHIP 4.7K 5% 1/10W
R969	1-216-089-00	s	METAL, CHIP 47K 5% 1/10W
R970	1-216-073-00	s	METAL, CHIP 10K 5% 1/10W
R971	1-216-049-00	s	METAL, CHIP 1K 5% 1/10W
R972	1-216-073-00	s	METAL, CHIP 10K 5% 1/10W
R973	1-216-748-11	s	METAL, CHIP 39K 1% 1/10W
R974	1-216-065-00	s	METAL, CHIP 4.7K 5% 1/10W
R975	1-216-089-00	s	METAL, CHIP 47K 5% 1/10W
R976	1-216-073-00	s	METAL, CHIP 10K 5% 1/10W

(AU-146P BOARD)

Ref. No. or Q'ty	Part No.	SP	Description
R977	1-216-049-00	s	METAL, CHIP 1K 5% 1/10W
R978	1-216-097-00	s	METAL, CHIP 100K 5% 1/10W
R981	1-216-097-00	s	METAL, CHIP 100K 5% 1/10W
R982	1-216-097-00	s	METAL, CHIP 100K 5% 1/10W
R983	1-216-097-00	s	METAL, CHIP 100K 5% 1/10W
R984	1-216-748-11	s	METAL, CHIP 39K 1% 1/10W
R985	1-216-065-00	s	METAL, CHIP 4.7K 5% 1/10W
R986	1-216-089-00	s	METAL, CHIP 47K 5% 1/10W
RV121	1-237-035-11	s	RES, ADJ, METAL 5K
RV151	1-237-038-11	s	RES, ADJ, METAL 50K
RV181	1-237-036-11	s	RES, ADJ, METAL 10K
RV221	1-237-035-11	s	RES, ADJ, METAL 5K
RV251	1-237-038-11	s	RES, ADJ, METAL 50K
RV281	1-237-036-11	s	RES, ADJ, METAL 10K
RV351	1-237-035-11	s	RES, ADJ, METAL 5K
RV352	1-237-036-11	s	RES, ADJ, METAL 10K
RV451	1-237-035-11	s	RES, ADJ, METAL 5K
RV452	1-237-036-11	s	RES, ADJ, METAL 10K
S901	1-571-258-11	s	SWITCH, SLIDE

AU-147P BOARD

Ref. No. or Q'ty	Part No.	SP	Description
This board includes the DUS-485 and DUS-475 boards.			
1pc	A-6713-461-A	o	MOUNTED CIRCUIT BOARD, AU-147P
2pcs	1-568-613-11	o	SOCKET, SIL 2P
2pcs	1-573-201-11	s	SOCKET, SIL 5P
1pc	1-568-616-11	o	SOCKET, SIL 6P
C101	1-163-235-11	s	CERAMIC, CHIP 22PF 5% 50V
C102	1-131-375-00	s	TANTALUM 4.7uF 10% 10V
C103	1-131-365-00	s	TANTALUM 10uF 10% 20V
C104	1-163-109-00	s	CERAMIC, CHIP 47PF 5% 50V
C105	1-126-404-11	s	ELECT 4.7uF 20% 50V
C106	1-126-673-11	s	ELECT 100uF 20% 16V
C107	1-163-109-00	s	CERAMIC, CHIP 47PF 5% 50V
C108	1-163-989-11	s	CERAMIC 0.033uF 10% 25V
C109	1-124-477-11	s	ELECT 47uF 20% 25V
C110	1-124-477-11	s	ELECT 47uF 20% 25V
C111	1-126-396-11	s	ELECT, CHIP 47uF 20% 16V
C112	1-130-493-00	s	MYLAR 0.068uF 5% 50V
C113	1-163-037-11	s	CERAMIC, CHIP 0.022uF 10% 25V
C114	1-131-374-00	s	TANTALUM 33uF 10% 16V
C115	1-131-374-00	s	TANTALUM 33uF 10% 16V
C116	1-163-109-00	s	CERAMIC, CHIP 47PF 5% 50V
C117	1-126-394-11	s	ELECT, CHIP 10uF 20% 16V
C118	1-131-365-00	s	TANTALUM 10uF 10% 20V
C119	1-130-477-00	s	MYLAR 0.0033uF 5% 50V
C120	1-163-235-11	s	CERAMIC, CHIP 22PF 5% 50V
C122	1-130-489-00	s	MYLAR 0.033uF 5% 50V
C123	1-130-473-00	s	MYLAR 0.0015uF 5% 50V
C124	1-130-494-11	s	MYLAR 0.082uF 5% 50V
C125	1-130-473-00	s	MYLAR 0.0015uF 5% 50V
C126	1-126-394-11	s	ELECT, CHIP 10uF 20% 16V
C127	1-126-394-11	s	ELECT, CHIP 10uF 20% 16V
C128	1-131-365-00	s	TANTALUM 10uF 10% 20V
C129	1-130-475-00	s	MYLAR 0.0022uF 5% 50V
C130	1-163-235-11	s	CERAMIC, CHIP 22PF 5% 50V
C131	1-130-488-00	s	MYLAR 0.027uF 5% 50V
C132	1-130-476-00	s	MYLAR 0.0027uF 5% 50V
C133	1-130-494-11	s	MYLAR 0.082uF 5% 50V
C134	1-130-473-00	s	MYLAR 0.0015uF 5% 50V
C135	1-126-394-11	s	ELECT, CHIP 10uF 20% 16V
C136	1-126-394-11	s	ELECT, CHIP 10uF 20% 16V
C137	1-163-109-00	s	CERAMIC, CHIP 47PF 5% 50V
C138	1-130-471-00	s	MYLAR 0.001uF 5% 50V
C139	1-126-394-11	s	ELECT, CHIP 10uF 20% 16V
C140	1-130-477-00	s	MYLAR 0.0033uF 5% 50V
C141	1-130-477-00	s	MYLAR 0.0033uF 5% 50V
C201	1-163-235-11	s	CERAMIC, CHIP 22PF 5% 50V
C202	1-131-375-00	s	TANTALUM 4.7uF 10% 10V
C203	1-131-365-00	s	TANTALUM 10uF 10% 20V
C204	1-163-109-00	s	CERAMIC, CHIP 47PF 5% 50V
C205	1-126-404-11	s	ELECT 4.7uF 20% 50V
C206	1-126-673-11	s	ELECT 100uF 20% 16V
C207	1-163-109-00	s	CERAMIC, CHIP 47PF 5% 50V
C208	1-163-989-11	s	CERAMIC 0.033uF 10% 25V
C211	1-126-396-11	s	ELECT, CHIP 47uF 20% 16V
C212	1-130-493-00	s	MYLAR 0.068uF 5% 50V
C213	1-163-037-11	s	CERAMIC, CHIP 0.022uF 10% 25V
C214	1-131-374-00	s	TANTALUM 33uF 10% 16V
C215	1-131-374-00	s	TANTALUM 33uF 10% 16V

(AU-147P BOARD)

Ref. No. or Q'ty	Part No.	SP	Description
C216	1-163-109-00	s	CERAMIC, CHIP 47PF 5% 50V
C217	1-126-394-11	s	ELECT, CHIP 10uF 20% 16V
C218	1-131-365-00	s	TANTALUM 10uF 10% 20V
C219	1-130-477-00	s	MYLAR 0.0033uF 5% 50V
C220	1-163-235-11	s	CERAMIC, CHIP 22PF 5% 50V
C222	1-130-489-00	s	MYLAR 0.033uF 5% 50V
C223	1-130-473-00	s	MYLAR 0.0015uF 5% 50V
C224	1-130-494-11	s	MYLAR 0.082uF 5% 50V
C225	1-130-473-00	s	MYLAR 0.0015uF 5% 50V
C226	1-126-394-11	s	ELECT, CHIP 10uF 20% 16V
C227	1-126-394-11	s	ELECT, CHIP 10uF 20% 16V
C228	1-131-365-00	s	TANTALUM 10uF 10% 20V
C229	1-130-475-00	s	MYLAR 0.0022uF 5% 50V
C230	1-163-235-11	s	CERAMIC, CHIP 22PF 5% 50V
C231	1-130-488-00	s	MYLAR 0.027uF 5% 50V
C232	1-130-476-00	s	MYLAR 0.0027uF 5% 50V
C233	1-130-494-11	s	MYLAR 0.082uF 5% 50V
C234	1-130-473-00	s	MYLAR 0.0015uF 5% 50V
C235	1-126-394-11	s	ELECT, CHIP 10uF 20% 16V
C236	1-126-394-11	s	ELECT, CHIP 10uF 20% 16V
C237	1-163-109-00	s	CERAMIC, CHIP 47PF 5% 50V
C238	1-130-471-00	s	MYLAR 0.001uF 5% 50V
C239	1-126-394-11	s	ELECT, CHIP 10uF 20% 16V
C240	1-130-477-00	s	MYLAR 0.0033uF 5% 50V
C241	1-130-477-00	s	MYLAR 0.0033uF 5% 50V
C301	1-126-394-11	s	ELECT, CHIP 10uF 20% 16V
C302	1-163-019-00	s	CERAMIC, CHIP 0.0068uF 10% 50V
C303	1-163-121-00	s	CERAMIC, CHIP 150PF 5% 50V
C305	1-126-394-11	s	ELECT, CHIP 10uF 20% 16V
C306	1-163-137-00	s	CERAMIC, CHIP 680PF 5% 50V
C307	1-163-023-00	s	CERAMIC, CHIP 0.015uF 5% 50V
C308	1-163-121-00	s	CERAMIC, CHIP 150PF 5% 50V
C309	1-163-037-11	s	CERAMIC, CHIP 0.022uF 10% 25V
C310	1-126-394-11	s	ELECT, CHIP 10uF 20% 16V
C311	1-126-394-11	s	ELECT, CHIP 10uF 20% 16V
C312	1-163-099-00	s	CERAMIC, CHIP 18PF 5% 50V
C313	1-163-123-00	s	CERAMIC, CHIP 180PF 5% 50V
C314	1-163-137-00	s	CERAMIC, CHIP 680PF 5% 50V
C351	1-163-235-11	s	CERAMIC, CHIP 22PF 5% 50V
C352	1-163-137-00	s	CERAMIC, CHIP 680PF 5% 50V
C353	1-163-989-11	s	CERAMIC 0.033uF 10% 25V
C354	1-126-394-11	s	ELECT, CHIP 10uF 20% 16V
C401	1-126-394-11	s	ELECT, CHIP 10uF 20% 16V
C402	1-163-019-00	s	CERAMIC, CHIP 0.0068uF 10% 50V
C403	1-163-121-00	s	CERAMIC, CHIP 150PF 5% 50V
C405	1-126-394-11	s	ELECT, CHIP 10uF 20% 16V
C406	1-163-137-00	s	CERAMIC, CHIP 680PF 5% 50V
C407	1-163-023-00	s	CERAMIC, CHIP 0.015uF 5% 50V
C408	1-163-121-00	s	CERAMIC, CHIP 150PF 5% 50V
C409	1-163-037-11	s	CERAMIC, CHIP 0.022uF 10% 25V
C410	1-126-394-11	s	ELECT, CHIP 10uF 20% 16V
C411	1-126-394-11	s	ELECT, CHIP 10uF 20% 16V
C412	1-163-099-00	s	CERAMIC, CHIP 18PF 5% 50V
C413	1-163-123-00	s	CERAMIC, CHIP 180PF 5% 50V
C414	1-163-137-00	s	CERAMIC, CHIP 680PF 5% 50V
C451	1-163-235-11	s	CERAMIC, CHIP 22PF 5% 50V
C452	1-163-137-00	s	CERAMIC, CHIP 680PF 5% 50V
C453	1-163-989-11	s	CERAMIC 0.033uF 10% 25V
C454	1-126-394-11	s	ELECT, CHIP 10uF 20% 16V

(AU-147P BOARD)

Ref. No. or Q'ty	Part No.	SP	Description
C501	1-163-037-11	s	CERAMIC, CHIP 0.022uF 10% 25V
C502	1-163-809-11	s	CERAMIC, CHIP 0.047uF 10% 25V
C503	1-163-809-11	s	CERAMIC, CHIP 0.047uF 10% 25V
C504	1-163-037-11	s	CERAMIC, CHIP 0.022uF 10% 25V
C601	1-164-489-11	s	CERAMIC, CHIP 0.22uF 10% 16V
C602	1-131-587-11	s	TANTALUM 0.68MF 5% 35V
C631	1-164-489-11	s	CERAMIC, CHIP 0.22uF 10% 16V
C632	1-124-902-00	s	ELECT 0.47uF 20% 50V
C633	1-164-182-11	s	CERAMIC CHIP 3300PF 10% 100V
C634	1-164-182-11	s	CERAMIC CHIP 3300PF 10% 100V
C635	1-131-587-11	s	TANTALUM 0.68MF 5% 35V
C636	1-136-562-11	s	FILM 0.0082uF 5% 630V
C637	1-162-814-11	s	CERAMIC 0.47uF 10% 50V
C651	1-164-489-11	s	CERAMIC, CHIP 0.22uF 10% 16V
C652	1-124-902-00	s	ELECT 0.47uF 20% 50V
C653	1-164-182-11	s	CERAMIC CHIP 3300PF 10% 100V
C654	1-164-182-11	s	CERAMIC CHIP 3300PF 10% 100V
C655	1-131-587-11	s	TANTALUM 0.68MF 5% 35V
C656	1-136-562-11	s	FILM 0.0082uF 5% 630V
C657	1-162-814-11	s	CERAMIC 0.47uF 10% 50V
C671	1-164-489-11	s	CERAMIC, CHIP 0.22uF 10% 16V
C672	1-124-902-00	s	ELECT 0.47uF 20% 50V
C673	1-164-182-11	s	CERAMIC CHIP 3300PF 10% 100V
C674	1-164-182-11	s	CERAMIC CHIP 3300PF 10% 100V
C676	1-136-562-11	s	FILM 0.0082uF 5% 630V
C691	1-163-105-00	s	CERAMIC, CHIP 33PF 5% 50V
C692	1-163-105-00	s	CERAMIC, CHIP 33PF 5% 50V
C695	1-124-907-11	s	ELECT 10uF 20% 50V
C696	1-163-235-11	s	CERAMIC, CHIP 22PF 5% 50V
C697	1-163-109-00	s	CERAMIC, CHIP 47PF 5% 50V
C701	1-164-489-11	s	CERAMIC, CHIP 0.22uF 10% 16V
C702	1-131-587-11	s	TANTALUM 0.68MF 5% 35V
C801	1-124-907-11	s	ELECT 10uF 20% 50V
C802	1-124-477-11	s	ELECT 47uF 20% 25V
C803	1-124-477-11	s	ELECT 47uF 20% 25V
C804	1-163-037-11	s	CERAMIC, CHIP 0.022uF 10% 25V
C805	1-124-907-11	s	ELECT 10uF 20% 50V
C806	1-163-037-11	s	CERAMIC, CHIP 0.022uF 10% 25V
C807	1-163-037-11	s	CERAMIC, CHIP 0.022uF 10% 25V
C808	1-124-907-11	s	ELECT 10uF 20% 50V
C809	1-124-477-11	s	ELECT 47uF 20% 25V
C810	1-124-477-11	s	ELECT 47uF 20% 25V
C811	1-163-037-11	s	CERAMIC, CHIP 0.022uF 10% 25V
C812	1-124-907-11	s	ELECT 10uF 20% 50V
C813	1-163-037-11	s	CERAMIC, CHIP 0.022uF 10% 25V
C814	1-163-037-11	s	CERAMIC, CHIP 0.022uF 10% 25V
C815	1-124-907-11	s	ELECT 10uF 20% 50V
C816	1-124-907-11	s	ELECT 10uF 20% 50V
C817	1-124-477-11	s	ELECT 47uF 20% 25V
C818	1-163-037-11	s	CERAMIC, CHIP 0.022uF 10% 25V
C819	1-163-037-11	s	CERAMIC, CHIP 0.022uF 10% 25V
C820	1-163-037-11	s	CERAMIC, CHIP 0.022uF 10% 25V
C821	1-163-037-11	s	CERAMIC, CHIP 0.022uF 10% 25V
C822	1-163-037-11	s	CERAMIC, CHIP 0.022uF 10% 25V
C823	1-163-037-11	s	CERAMIC, CHIP 0.022uF 10% 25V
C824	1-163-037-11	s	CERAMIC, CHIP 0.022uF 10% 25V
C825	1-163-037-11	s	CERAMIC, CHIP 0.022uF 10% 25V
C826	1-163-037-11	s	CERAMIC, CHIP 0.022uF 10% 25V
C828	1-163-037-11	s	CERAMIC, CHIP 0.022uF 10% 25V

(AU-147P BOARD)

Ref. No. or Q'ty	Part No.	SP	Description
C901	1-163-019-00	s	CERAMIC, CHIP 0.0068uF 10% 50V
CN114	1-573-782-21	o	CONNECTOR, PHEC 60P, MALE
CN115	1-573-782-21	o	CONNECTOR, PHEC 60P, MALE
COP631	1-565-413-11	o	PLUG, SHORTING
COP651	1-565-413-11	o	PLUG, SHORTING
COP671	1-565-413-11	o	PLUG, SHORTING
COP901	1-565-413-11	o	PLUG, SHORTING
COR631	1-566-388-11	s	CONNECTOR, 8P, MALE
COR651	1-566-388-11	s	CONNECTOR, 8P, MALE
COR671	1-566-388-11	s	CONNECTOR, 8P, MALE
COR901	1-566-388-11	s	CONNECTOR, 8P, MALE
CV301	1-141-297-11	s	CAP, TRIMMER 90PF
CV401	1-141-297-11	s	CAP, TRIMMER 90PF
D101	8-719-800-76	s	DIODE 1SS226
D102	8-719-800-76	s	DIODE 1SS226
D103	8-719-123-82	s	DIODE 1SS303-T1
D104	8-719-800-76	s	DIODE 1SS226
D201	8-719-800-76	s	DIODE 1SS226
D202	8-719-800-76	s	DIODE 1SS226
D203	8-719-123-82	s	DIODE 1SS303-T1
D204	8-719-800-76	s	DIODE 1SS226
D501	8-719-123-82	s	DIODE 1SS303-T1
D502	8-719-123-82	s	DIODE 1SS303-T1
D601	8-719-123-82	s	DIODE 1SS303-T1
D631	8-719-123-82	s	DIODE 1SS303-T1
D632	8-719-123-82	s	DIODE 1SS303-T1
D633	8-719-123-82	s	DIODE 1SS303-T1
D651	8-719-123-82	s	DIODE 1SS303-T1
D652	8-719-123-82	s	DIODE 1SS303-T1
D653	8-719-123-82	s	DIODE 1SS303-T1
D671	8-719-123-82	s	DIODE 1SS303-T1
D691	8-719-123-82	s	DIODE 1SS303-T1
D692	8-719-123-82	s	DIODE 1SS303-T1
D701	8-719-123-82	s	DIODE 1SS303-T1
FL101	1-236-171-11	s	FILTER, LOW-PASS
IC101	8-759-106-02	s	IC UPC4570G2
IC103	8-759-908-16	s	IC TL072CPS
IC104	8-759-106-02	s	IC UPC4570G2
IC105	8-759-106-02	s	IC UPC4570G2
IC107	8-759-009-17	s	IC MC14077BF
IC108	8-741-164-50	s	IC SBX1645-01
IC109	8-759-908-16	s	IC TL072CPS
IC110	8-759-982-04	s	IC RC5532M
IC111	8-759-710-77	s	IC NJM4560MD
IC112	8-759-710-77	s	IC NJM4560MD
IC113	8-759-710-77	s	IC NJM4560MD
IC114	8-759-710-77	s	IC NJM4560MD
IC115	8-759-982-04	s	IC RC5532M
IC201	8-759-106-02	s	IC UPC4570G2
IC203	8-759-908-16	s	IC TL072CPS
IC205	8-759-106-02	s	IC UPC4570G2
IC211	8-759-710-77	s	IC NJM4560MD
IC212	8-759-710-77	s	IC NJM4560MD
IC213	8-759-710-77	s	IC NJM4560MD
IC214	8-759-710-77	s	IC NJM4560MD

(AU-147P BOARD)

Ref. No. or Q'ty	Part No.	SP	Description
IC301	8-759-710-77	s	IC NJM4560MD
IC302	8-759-982-04	s	IC RC5532M
IC351	8-759-100-96	s	IC UPC4558G2
IC352	8-759-100-96	s	IC UPC4558G2
IC401	8-759-710-77	s	IC NJM4560MD
IC451	8-759-100-96	s	IC UPC4558G2
IC501	8-757-991-00	s	IC CX7991
IC502	8-759-925-80	s	IC SN74HC14NS
IC601	8-759-927-29	s	IC SN74HCU04NS
IC631	8-759-927-29	s	IC SN74HCU04NS
IC691	8-759-926-97	s	IC SN74HC4024NS
IC692	8-759-008-92	s	IC MC14024BF
IC693	8-759-009-46	s	IC MC14528BF
IC694	8-759-925-76	s	IC SN74HC08NS
IC695	8-759-925-72	s	IC SN74HC02NS
IC696	8-759-925-76	s	IC SN74HC08NS
IC697	8-759-925-72	s	IC SN74HC02NS
IC699	8-759-008-82	s	IC MC14013BF
IC801	8-759-982-21	s	IC RC78L05A
IC802	8-759-982-21	s	IC RC78L05A
IC803	8-759-982-44	s	IC RC79L05A
IC804	8-759-982-44	s	IC RC79L05A
IC901	8-759-106-02	s	IC UPC4570G2
IC902	8-759-908-16	s	IC TL072CPS
IC903	8-759-939-41	s	IC S-81230AG-RB
L601	1-412-533-11	s	INDUCTOR 47uH
L631	1-412-533-11	s	INDUCTOR 47uH
L651	1-412-533-11	s	INDUCTOR 47uH
L671	1-412-533-11	s	INDUCTOR 47uH
L701	1-412-533-11	s	INDUCTOR 47uH
L801	1-412-533-11	s	INDUCTOR 47uH
LV301	1-410-855-21	s	COIL, VAR
LV401	1-410-855-21	s	COIL, VAR
LV631	1-414-007-11	s	COIL, VAR
LV651	1-414-007-11	s	COIL, VAR
LV671	1-414-007-11	s	COIL, VAR
Q101	8-729-205-38	s	TRANSISTOR 2SK208-Y
Q102	8-729-203-30	s	TRANSISTOR 2SJ106-Y
Q103	8-729-117-32	s	TRANSISTOR 2SC4177
Q104	8-729-117-32	s	TRANSISTOR 2SC4177
Q105	8-729-117-32	s	TRANSISTOR 2SC4177
Q106	8-729-905-18	s	TRANSISTOR DTC144EU
Q107	8-729-905-18	s	TRANSISTOR DTC144EU
Q108	8-729-117-16	s	TRANSISTOR 2SA1611-M6
Q109	8-729-205-38	s	TRANSISTOR 2SK208-Y
Q110	8-729-203-30	s	TRANSISTOR 2SJ106-Y
Q111	8-729-905-12	s	TRANSISTOR DTA144EU
Q112	8-729-905-12	s	TRANSISTOR DTA144EU
Q113	8-729-209-07	s	TRANSISTOR 2SC4213-B
Q115	8-729-905-12	s	TRANSISTOR DTA144EU
Q116	8-729-209-07	s	TRANSISTOR 2SC4213-B
Q118	8-729-905-12	s	TRANSISTOR DTA144EU
Q119	8-729-209-07	s	TRANSISTOR 2SC4213-B
Q120	8-729-209-07	s	TRANSISTOR 2SC4213-B
Q201	8-729-205-38	s	TRANSISTOR 2SK208-Y
Q202	8-729-203-30	s	TRANSISTOR 2SJ106-Y
Q203	8-729-117-32	s	TRANSISTOR 2SC4177
Q204	8-729-117-32	s	TRANSISTOR 2SC4177

(AU-147P BOARD)

Ref. No. or Q'ty	Part No.	SP	Description
Q205	8-729-117-32	s	TRANSISTOR 2SC4177
Q206	8-729-905-18	s	TRANSISTOR DTC144EU
Q207	8-729-905-18	s	TRANSISTOR DTC144EU
Q208	8-729-117-16	s	TRANSISTOR 2SA1611-M6
Q209	8-729-205-38	s	TRANSISTOR 2SK208-Y
Q210	8-729-203-30	s	TRANSISTOR 2SJ106-Y
Q211	8-729-905-12	s	TRANSISTOR DTA144EU
Q212	8-729-905-12	s	TRANSISTOR DTA144EU
Q213	8-729-209-07	s	TRANSISTOR 2SC4213-B
Q214	8-729-905-18	s	TRANSISTOR DTC144EU
Q215	8-729-905-12	s	TRANSISTOR DTA144EU
Q216	8-729-209-07	s	TRANSISTOR 2SC4213-B
Q217	8-729-905-18	s	TRANSISTOR DTC144EU
Q218	8-729-905-12	s	TRANSISTOR DTA144EU
Q219	8-729-209-07	s	TRANSISTOR 2SC4213-B
Q220	8-729-209-07	s	TRANSISTOR 2SC4213-B
Q301	8-729-209-07	s	TRANSISTOR 2SC4213-B
Q351	8-729-209-07	s	TRANSISTOR 2SC4213-B
Q401	8-729-209-07	s	TRANSISTOR 2SC4213-B
Q402	8-729-905-12	s	TRANSISTOR DTA144EU
Q451	8-729-209-07	s	TRANSISTOR 2SC4213-B
Q501	8-729-117-32	s	TRANSISTOR 2SC4177
Q503	8-729-117-32	s	TRANSISTOR 2SC4177
Q505	8-729-117-32	s	TRANSISTOR 2SC4177
Q507	8-729-905-18	s	TRANSISTOR DTC144EU
Q508	8-729-117-16	s	TRANSISTOR 2SA1611-M6
Q509	8-729-905-18	s	TRANSISTOR DTC144EU
Q510	8-729-117-16	s	TRANSISTOR 2SA1611-M6
Q511	8-729-905-12	s	TRANSISTOR DTA144EU
Q512	8-729-905-12	s	TRANSISTOR DTA144EU
Q513	8-729-905-12	s	TRANSISTOR DTA144EU
Q514	8-729-905-12	s	TRANSISTOR DTA144EU
Q515	8-729-905-12	s	TRANSISTOR DTA144EU
Q516	8-729-905-12	s	TRANSISTOR DTA144EU
Q601	8-729-905-18	s	TRANSISTOR DTC144EU
Q602	8-729-117-16	s	TRANSISTOR 2SA1611-M6
Q603	8-729-117-11	s	TRANSISTOR 2SB1151-L
Q604	8-729-117-32	s	TRANSISTOR 2SC4177
Q605	8-729-905-18	s	TRANSISTOR DTC144EU
Q606	8-729-905-18	s	TRANSISTOR DTC144EU
Q608	8-729-107-84	s	TRANSISTOR 2SC3623A-L
Q609	8-729-107-84	s	TRANSISTOR 2SC3623A-L
Q631	8-729-905-18	s	TRANSISTOR DTC144EU
Q632	8-729-117-16	s	TRANSISTOR 2SA1611-M6
Q633	8-729-117-11	s	TRANSISTOR 2SB1151-L
Q634	8-729-117-32	s	TRANSISTOR 2SC4177
Q635	8-729-212-02	s	TRANSISTOR 2SC2120-Y
Q636	8-729-212-02	s	TRANSISTOR 2SC2120-Y
Q637	8-729-905-18	s	TRANSISTOR DTC144EU
Q638	8-729-905-18	s	TRANSISTOR DTC144EU
Q639	8-729-117-16	s	TRANSISTOR 2SA1611-M6
Q651	8-729-905-18	s	TRANSISTOR DTC144EU
Q652	8-729-117-16	s	TRANSISTOR 2SA1611-M6
Q653	8-729-117-11	s	TRANSISTOR 2SB1151-L
Q654	8-729-117-32	s	TRANSISTOR 2SC4177
Q655	8-729-212-02	s	TRANSISTOR 2SC2120-Y
Q656	8-729-212-02	s	TRANSISTOR 2SC2120-Y
Q657	8-729-905-18	s	TRANSISTOR DTC144EU
Q658	8-729-905-18	s	TRANSISTOR DTC144EU

(AU-147P BOARD)

Ref. No. or Q'ty	Part No.	SP	Description
Q659	8-729-117-16	S	TRANSISTOR 2SA1611-M6
Q671	8-729-905-18	S	TRANSISTOR DTC144EU
Q672	8-729-117-16	S	TRANSISTOR 2SA1611-M6
Q673	8-729-117-11	S	TRANSISTOR 2SB1151-L
Q674	6-729-117-32	S	TRANSISTOR 2SC4177
Q675	8-729-212-02	S	TRANSISTOR 2SC2120-Y
Q676	8-729-212-02	S	TRANSISTOR 2SC2120-Y
Q701	8-729-905-18	S	TRANSISTOR DTC144EU
Q702	8-729-117-16	S	TRANSISTOR 2SA1611-M6
Q703	8-729-117-11	S	TRANSISTOR 2SB1151-L
Q704	8-729-117-32	S	TRANSISTOR 2SC4177
Q705	8-729-905-18	S	TRANSISTOR DTC144EU
Q706	8-729-905-12	S	TRANSISTOR DTA144EU
Q706	8-729-905-18	S	TRANSISTOR DTC144EU
Q707	8-729-905-12	S	TRANSISTOR DTA144EU
Q708	8-729-107-84	S	TRANSISTOR 2SC3623A-L
Q709	8-729-107-84	S	TRANSISTOR 2SC3623A-L
Q801	8-729-106-68	S	TRANSISTOR 2SC1615A-GP
Q802	8-729-106-80	S	TRANSISTOR 2SB1115A
Q901	8-729-117-32	S	TRANSISTOR 2SC4177
Q902	8-729-905-18	S	TRANSISTOR DTC144EU
R101	1-216-675-11	S	METAL, CHIP 10K 0.5% 1/10W
R102	1-216-675-11	S	METAL, CHIP 10K 0.5% 1/10W
R103	1-216-675-11	S	METAL, CHIP 10K 0.5% 1/10W
R104	1-216-675-11	S	METAL, CHIP 10K 0.5% 1/10W
R108	1-216-121-00	S	METAL, CHIP 1M 5% 1/10W
R109	1-216-121-00	S	METAL, CHIP 1M 5% 1/10W
R110	1-216-121-00	S	METAL, CHIP 1M 5% 1/10W
R111	1-216-121-00	S	METAL, CHIP 1M 5% 1/10W
R112	1-216-691-11	S	METAL, CHIP 47K 0.5% 1/10W
R113	1-216-691-11	S	METAL, CHIP 47K 0.5% 1/10W
R114	1-216-081-00	S	METAL, CHIP 22K 5% 1/10W
R115	1-216-685-11	S	METAL, CHIP 27K 0.5% 1/10W
R116	1-216-651-11	S	METAL, CHIP 1K 0.5% 1/10W
R117	1-216-009-00	S	METAL, CHIP 22 5% 1/10W
R118	1-216-025-00	S	METAL, CHIP 100 5% 1/10W
R119	1-216-105-00	S	METAL, CHIP 220K 5% 1/10W
R120	1-216-073-00	S	METAL, CHIP 10K 5% 1/10W
R121	1-216-686-11	S	METAL, CHIP 30K 0.5% 1/10W
R122	1-216-661-11	S	METAL, CHIP 2.7K 0.5% 1/10W
R123	1-216-659-11	S	METAL, CHIP 2.2K 0.5% 1/10W
R124	1-216-686-11	S	METAL, CHIP 30K 0.5% 1/10W
R125	1-216-077-00	S	METAL, CHIP 15K 5% 1/10W
R126	1-216-679-11	S	METAL, CHIP 15K 0.5% 1/10W
R127	1-216-089-00	S	METAL, CHIP 47K 5% 1/10W
R128	1-216-845-11	S	METAL, CHIP 560 0.5% 1/10W
R129	1-216-679-11	S	METAL, CHIP 15K 0.5% 1/10W
R130	1-216-675-11	S	METAL, CHIP 10K 0.5% 1/10W
R131	1-216-675-11	S	METAL, CHIP 10K 0.5% 1/10W
R132	1-216-675-11	S	METAL, CHIP 10K 0.5% 1/10W
R133	1-216-675-11	S	METAL, CHIP 10K 0.5% 1/10W
R134	1-216-659-11	S	METAL, CHIP 2.2K 0.5% 1/10W
R135	1-216-659-11	S	METAL, CHIP 2.2K 0.5% 1/10W
R136	1-216-089-00	S	METAL, CHIP 47K 5% 1/10W
R137	1-216-085-00	S	METAL, CHIP 4.7K 5% 1/10W
R138	1-216-089-00	S	METAL, CHIP 47K 5% 1/10W
R139	1-216-121-00	S	METAL, CHIP 1M 5% 1/10W
R140	1-216-121-00	S	METAL, CHIP 1M 5% 1/10W

(AU-147P BOARD)

Ref. No. or Q'ty	Part No.	SP	Description
R141	1-216-121-00	S	METAL, CHIP 1M 5% 1/10W
R142	1-216-121-00	S	METAL, CHIP 1M 5% 1/10W
R143	1-216-089-00	S	METAL, CHIP 47K 5% 1/10W
R144	1-216-073-00	S	METAL, CHIP 10K 5% 1/10W
R145	1-216-073-00	S	METAL, CHIP 10K 5% 1/10W
R146	1-216-073-00	S	METAL, CHIP 10K 5% 1/10W
R147	1-216-109-00	S	METAL, CHIP 330K 5% 1/10W
R148	1-216-073-00	S	METAL, CHIP 10K 5% 1/10W
R149	1-216-687-11	S	METAL, CHIP 4.7K 0.5% 1/10W
R150	1-216-683-11	S	METAL, CHIP 22K 0.5% 1/10W
R151	1-216-665-11	S	METAL, CHIP 3.9K 0.5% 1/10W
R152	1-216-663-11	S	METAL, CHIP 3.3K 0.5% 1/10W
R154	1-216-081-00	S	METAL, CHIP 22K 5% 1/10W
R155	1-216-081-00	S	METAL, CHIP 22K 5% 1/10W
R158	1-216-059-00	S	METAL, CHIP 2.7K 5% 1/10W
R157	1-216-073-00	S	METAL, CHIP 10K 5% 1/10W
R158	1-216-071-00	S	METAL, CHIP 8.2K 5% 1/10W
R160	1-216-095-00	S	METAL, CHIP 82K 5% 1/10W
R161	1-216-097-00	S	METAL, CHIP 100K 5% 1/10W
R162	1-216-644-11	S	METAL, CHIP 510 0.5% 1/10W
R163	1-216-644-11	S	METAL, CHIP 510 0.5% 1/10W
R164	1-216-073-00	S	METAL, CHIP 10K 5% 1/10W
R165	1-216-073-00	S	METAL, CHIP 10K 5% 1/10W
R166	1-216-049-00	S	METAL, CHIP 1K 5% 1/10W
R167	1-216-073-00	S	METAL, CHIP 10K 5% 1/10W
R168	1-216-073-00	S	METAL, CHIP 10K 5% 1/10W
R169	1-216-085-00	S	METAL, CHIP 33K 5% 1/10W
R170	1-216-057-00	S	METAL, CHIP 2.2K 5% 1/10W
R171	1-216-073-00	S	METAL, CHIP 10K 5% 1/10W
R172	1-216-694-11	S	METAL, CHIP 62K 0.5% 1/10W
R173	1-216-095-00	S	METAL, CHIP 82K 5% 1/10W
R174	1-216-097-00	S	METAL, CHIP 100K 5% 1/10W
R175	1-216-644-11	S	METAL, CHIP 510 0.5% 1/10W
R176	1-216-644-11	S	METAL, CHIP 510 0.5% 1/10W
R177	1-216-073-00	S	METAL, CHIP 10K 5% 1/10W
R178	1-216-073-00	S	METAL, CHIP 10K 5% 1/10W
R179	1-216-049-00	S	METAL, CHIP 1K 5% 1/10W
R180	1-216-073-00	S	METAL, CHIP 10K 5% 1/10W
R181	1-216-073-00	S	METAL, CHIP 10K 5% 1/10W
R182	1-216-073-00	S	METAL, CHIP 10K 5% 1/10W
R183	1-216-073-00	S	METAL, CHIP 10K 5% 1/10W
R184	1-216-073-00	S	METAL, CHIP 10K 5% 1/10W
R185	1-216-073-00	S	METAL, CHIP 10K 5% 1/10W
R186	1-216-073-00	S	METAL, CHIP 10K 5% 1/10W
R187	1-216-057-00	S	METAL, CHIP 2.2K 5% 1/10W
R188	1-216-079-00	S	METAL, CHIP 18K 5% 1/10W
R189	1-216-045-00	S	METAL, CHIP 680 5% 1/10W
R190	1-216-089-00	S	METAL, CHIP 47K 5% 1/10W
R191	1-216-081-00	S	METAL, CHIP 22K 5% 1/10W
R201	1-216-675-11	S	METAL, CHIP 10K 0.5% 1/10W
R202	1-216-675-11	S	METAL, CHIP 10K 0.5% 1/10W
R203	1-216-675-11	S	METAL, CHIP 10K 0.5% 1/10W
R204	1-216-675-11	S	METAL, CHIP 10K 0.5% 1/10W
R206	1-216-121-00	S	METAL, CHIP 1M 5% 1/10W
R209	1-216-121-00	S	METAL, CHIP 1M 5% 1/10W
R210	1-216-121-00	S	METAL, CHIP 1M 5% 1/10W
R211	1-216-121-00	S	METAL, CHIP 1M 5% 1/10W
R212	1-216-691-11	S	METAL, CHIP 47K 0.5% 1/10W
R213	1-216-691-11	S	METAL, CHIP 47K 0.5% 1/10W

(AU-147P BOARD)

Ref. No. or Q'ty	Part No.	SP	Description
R214	1-216-081-00	s	METAL, CHIP 22K 5% 1/10W
R215	1-216-685-11	s	METAL, CHIP 27K 0.5% 1/10W
R216	1-216-651-11	s	METAL, CHIP 1K 0.5% 1/10W
R217	1-216-009-00	s	METAL, CHIP 22 5% 1/10W
R218	1-216-025-00	s	METAL, CHIP 100 5% 1/10W
R219	1-216-105-00	s	METAL, CHIP 220K 5% 1/10W
R220	1-216-073-00	s	METAL, CHIP 10K 5% 1/10W
R221	1-216-686-11	s	METAL, CHIP 30K 0.5% 1/10W
R222	1-216-661-11	s	METAL, CHIP 2.7K 0.5% 1/10W
R223	1-216-659-11	s	METAL, CHIP 2.2K 0.5% 1/10W
R224	1-216-686-11	s	METAL, CHIP 30K 0.5% 1/10W
R225	1-216-077-00	s	METAL, CHIP 15K 5% 1/10W
R226	1-216-673-11	s	METAL, CHIP 15K 0.5% 1/10W
R227	1-216-089-00	s	METAL, CHIP 47K 5% 1/10W
R228	1-216-645-11	s	METAL, CHIP 560 0.5% 1/10W
R229	1-216-679-11	s	METAL, CHIP 15K 0.5% 1/10W
R230	1-216-675-11	s	METAL, CHIP 10K 0.5% 1/10W
R231	1-216-675-11	s	METAL, CHIP 10K 0.5% 1/10W
R232	1-216-675-11	s	METAL, CHIP 10K 0.5% 1/10W
R233	1-216-675-11	s	METAL, CHIP 10K 0.5% 1/10W
R234	1-216-659-11	s	METAL, CHIP 2.2K 0.5% 1/10W
R235	1-216-659-11	s	METAL, CHIP 2.2K 0.5% 1/10W
R236	1-216-089-00	s	METAL, CHIP 47K 5% 1/10W
R237	1-216-065-00	s	METAL, CHIP 4.7K 5% 1/10W
R238	1-216-089-00	s	METAL, CHIP 47K 5% 1/10W
R239	1-216-121-00	s	METAL, CHIP 1M 5% 1/10W
R240	1-216-121-00	s	METAL, CHIP 1M 5% 1/10W
R241	1-216-121-00	s	METAL, CHIP 1M 5% 1/10W
R242	1-216-121-00	s	METAL, CHIP 1M 5% 1/10W
R243	1-216-089-00	s	METAL, CHIP 47K 5% 1/10W
R244	1-216-073-00	s	METAL, CHIP 10K 5% 1/10W
R245	1-216-073-00	s	METAL, CHIP 10K 5% 1/10W
R246	1-216-073-00	s	METAL, CHIP 10K 5% 1/10W
R247	1-216-109-00	s	METAL, CHIP 330K 5% 1/10W
R248	1-216-073-00	s	METAL, CHIP 10K 5% 1/10W
R249	1-216-667-11	s	METAL, CHIP 4.7K 0.5% 1/10W
R250	1-216-663-11	s	METAL, CHIP 22K 0.5% 1/10W
R251	1-216-665-11	s	METAL, CHIP 3.9K 0.5% 1/10W
R252	1-216-663-11	s	METAL, CHIP 3.3K 0.5% 1/10W
R254	1-216-081-00	s	METAL, CHIP 22K 5% 1/10W
R255	1-216-081-00	s	METAL, CHIP 22K 5% 1/10W
R256	1-216-059-00	s	METAL, CHIP 2.7K 5% 1/10W
R257	1-216-073-00	s	METAL, CHIP 10K 5% 1/10W
R258	1-216-071-00	s	METAL, CHIP 8.2K 5% 1/10W
R260	1-216-095-00	s	METAL, CHIP 82K 5% 1/10W
R261	1-216-097-00	s	METAL, CHIP 100K 5% 1/10W
R262	1-216-039-00	s	METAL, CHIP 390 5% 1/10W
R263	1-216-039-00	s	METAL, CHIP 390 5% 1/10W
R264	1-216-073-00	s	METAL, CHIP 10K 5% 1/10W
R265	1-216-073-00	s	METAL, CHIP 10K 5% 1/10W
R266	1-216-049-00	s	METAL, CHIP 1K 5% 1/10W
R267	1-216-073-00	s	METAL, CHIP 10K 5% 1/10W
R268	1-216-073-00	s	METAL, CHIP 10K 5% 1/10W
R269	1-216-085-00	s	METAL, CHIP 33K 5% 1/10W
R270	1-216-057-00	s	METAL, CHIP 2.2K 5% 1/10W
R271	1-216-073-00	s	METAL, CHIP 10K 5% 1/10W
R272	1-216-694-11	s	METAL, CHIP 82K 0.5% 1/10W
R273	1-216-095-00	s	METAL, CHIP 82K 5% 1/10W
R274	1-216-097-00	s	METAL, CHIP 100K 5% 1/10W

(AU-147P BOARD)

Ref. No. or Q'ty	Part No.	SP	Description
R275	1-216-041-00	s	METAL, CHIP 470 5% 1/10W
R276	1-216-041-00	s	METAL, CHIP 470 5% 1/10W
R277	1-216-073-00	s	METAL, CHIP 10K 5% 1/10W
R278	1-216-073-00	s	METAL, CHIP 10K 5% 1/10W
R279	1-216-049-00	s	METAL, CHIP 1K 5% 1/10W
R280	1-216-073-00	s	METAL, CHIP 10K 5% 1/10W
R281	1-216-073-00	s	METAL, CHIP 10K 5% 1/10W
R282	1-216-073-00	s	METAL, CHIP 10K 5% 1/10W
R283	1-216-073-00	s	METAL, CHIP 10K 5% 1/10W
R284	1-216-073-00	s	METAL, CHIP 10K 5% 1/10W
R285	1-216-073-00	s	METAL, CHIP 10K 5% 1/10W
R286	1-216-073-00	s	METAL, CHIP 10K 5% 1/10W
R287	1-216-057-00	s	METAL, CHIP 2.2K 5% 1/10W
R288	1-216-079-00	s	METAL, CHIP 68K 5% 1/10W
R289	1-216-045-00	s	METAL, CHIP 680 5% 1/10W
R290	1-216-089-00	s	METAL, CHIP 47K 5% 1/10W
R291	1-216-081-00	s	METAL, CHIP 22K 5% 1/10W
R301	1-216-081-00	s	METAL, CHIP 22K 5% 1/10W
R302	1-216-077-00	s	METAL, CHIP 15K 5% 1/10W
R303	1-216-089-00	s	METAL, CHIP 47K 5% 1/10W
R304	1-216-093-00	s	METAL, CHIP 68K 5% 1/10W
R305	1-216-077-00	s	METAL, CHIP 15K 5% 1/10W
R306	1-216-025-00	s	METAL, CHIP 100 5% 1/10W
R307	1-216-081-00	s	METAL, CHIP 22K 5% 1/10W
R308	1-216-089-00	s	METAL, CHIP 47K 5% 1/10W
R309	1-216-073-00	s	METAL, CHIP 10K 5% 1/10W
R310	1-216-069-00	s	METAL, CHIP 6.8K 5% 1/10W
R311	1-216-097-00	s	METAL, CHIP 100K 5% 1/10W
R312	1-216-025-00	s	METAL, CHIP 100 5% 1/10W
R313	1-216-073-00	s	METAL, CHIP 10K 5% 1/10W
R315	1-216-097-00	s	METAL, CHIP 100K 5% 1/10W
R316	1-216-081-00	s	METAL, CHIP 22K 5% 1/10W
R317	1-216-073-00	s	METAL, CHIP 10K 5% 1/10W
R324	1-216-105-00	s	METAL, CHIP 220K 5% 1/10W
R351	1-216-675-11	s	METAL, CHIP 10K 0.5% 1/10W
R352	1-216-675-11	s	METAL, CHIP 10K 0.5% 1/10W
R353	1-216-675-11	s	METAL, CHIP 10K 0.5% 1/10W
R354	1-216-675-11	s	METAL, CHIP 10K 0.5% 1/10W
R355	1-216-057-00	s	METAL, CHIP 2.2K 5% 1/10W
R356	1-216-073-00	s	METAL, CHIP 10K 5% 1/10W
R357	1-216-073-00	s	METAL, CHIP 10K 5% 1/10W
R358	1-216-065-00	s	METAL, CHIP 4.7K 5% 1/10W
R359	1-216-073-00	s	METAL, CHIP 10K 5% 1/10W
R361	1-216-025-00	s	METAL, CHIP 100 5% 1/10W
R362	1-216-105-00	s	METAL, CHIP 220K 5% 1/10W
R363	1-216-073-00	s	METAL, CHIP 10K 5% 1/10W
R364	1-216-097-00	s	METAL, CHIP 100K 5% 1/10W
R365	1-216-073-00	s	METAL, CHIP 10K 5% 1/10W
R401	1-216-081-00	s	METAL, CHIP 22K 5% 1/10W
R402	1-216-077-00	s	METAL, CHIP 15K 5% 1/10W
R403	1-216-089-00	s	METAL, CHIP 47K 5% 1/10W
R404	1-216-093-00	s	METAL, CHIP 68K 5% 1/10W
R405	1-216-077-00	s	METAL, CHIP 15K 5% 1/10W
R406	1-216-025-00	s	METAL, CHIP 100 5% 1/10W
R407	1-216-081-00	s	METAL, CHIP 22K 5% 1/10W
R408	1-216-089-00	s	METAL, CHIP 47K 5% 1/10W
R409	1-216-073-00	s	METAL, CHIP 10K 5% 1/10W
R410	1-216-069-00	s	METAL, CHIP 6.8K 5% 1/10W
R411	1-216-097-00	s	METAL, CHIP 100K 5% 1/10W

(AU-147P BOARD)

Ref. No. or Q'ty	Part No.	SP	Description
R412	1-216-025-00	s	METAL, CHIP 100 5% 1/10W
R413	1-216-073-00	s	METAL, CHIP 10K 5% 1/10W
R415	1-216-097-00	s	METAL, CHIP 100K 5% 1/10W
R416	1-216-081-00	s	METAL, CHIP 22K 5% 1/10W
R417	1-216-073-00	s	METAL, CHIP 10K 5% 1/10W
R424	1-216-105-00	s	METAL, CHIP 220K 5% 1/10W
R455	1-216-057-00	s	METAL, CHIP 2.2K 5% 1/10W
R456	1-216-073-00	s	METAL, CHIP 10K 5% 1/10W
R457	1-216-073-00	s	METAL, CHIP 10K 5% 1/10W
R458	1-216-065-00	s	METAL, CHIP 4.7K 5% 1/10W
R459	1-216-073-00	s	METAL, CHIP 10K 5% 1/10W
R461	1-216-025-00	s	METAL, CHIP 100 5% 1/10W
R462	1-216-105-00	s	METAL, CHIP 220K 5% 1/10W
R483	1-216-073-00	s	METAL, CHIP 10K 5% 1/10W
R485	1-216-073-00	s	METAL, CHIP 10K 5% 1/10W
R501	1-216-097-00	s	METAL, CHIP 100K 5% 1/10W
R502	1-216-041-00	s	METAL, CHIP 470 5% 1/10W
R503	1-216-674-11	s	METAL, CHIP 9.1K 0.5% 1/10W
R504	1-216-075-00	s	METAL, CHIP 12K 5% 1/10W
R506	1-216-041-00	s	METAL, CHIP 470 5% 1/10W
R507	1-216-674-11	s	METAL, CHIP 9.1K 0.5% 1/10W
R508	1-216-075-00	s	METAL, CHIP 12K 5% 1/10W
R510	1-216-663-11	s	METAL, CHIP 3.3K 0.5% 1/10W
R511	1-216-067-00	s	METAL, CHIP 5.6K 5% 1/10W
R513	1-216-097-00	s	METAL, CHIP 100K 5% 1/10W
R514	1-216-065-00	s	METAL, CHIP 4.7K 5% 1/10W
R515	1-216-085-00	s	METAL, CHIP 33K 5% 1/10W
R516	1-216-065-00	s	METAL, CHIP 4.7K 5% 1/10W
R517	1-216-089-00	s	METAL, CHIP 47K 5% 1/10W
R518	1-216-065-00	s	METAL, CHIP 4.7K 5% 1/10W
R519	1-216-085-00	s	METAL, CHIP 33K 5% 1/10W
R520	1-216-065-00	s	METAL, CHIP 4.7K 5% 1/10W
R521	1-216-089-00	s	METAL, CHIP 47K 5% 1/10W
R522	1-216-065-00	s	METAL, CHIP 4.7K 5% 1/10W
R523	1-216-065-00	s	METAL, CHIP 4.7K 5% 1/10W
R524	1-216-065-00	s	METAL, CHIP 4.7K 5% 1/10W
R525	1-216-049-00	s	METAL, CHIP 1K 5% 1/10W
R526	1-216-089-00	s	METAL, CHIP 47K 5% 1/10W
R527	1-216-049-00	s	METAL, CHIP 1K 5% 1/10W
R801	1-216-089-00	s	METAL, CHIP 47K 5% 1/10W
R802	1-216-069-00	s	METAL, CHIP 6.8K 5% 1/10W
R803	1-216-051-00	s	METAL, CHIP 1.2K 5% 1/10W
R804	1-216-081-00	s	METAL, CHIP 22K 5% 1/10W
R805	1-216-093-00	s	METAL, CHIP 68K 5% 1/10W
R806	1-216-049-00	s	METAL, CHIP 1K 5% 1/10W
R807	1-216-049-00	s	METAL, CHIP 1K 5% 1/10W
R808	1-216-295-00	s	METAL, CHIP 0-OHM
R809	1-216-053-00	s	METAL, CHIP 1.5K 5% 1/10W
R810	1-216-041-00	s	METAL, CHIP 470 5% 1/10W
R812	1-216-043-00	s	METAL, CHIP 560 5% 1/10W
R813	1-216-043-00	s	METAL, CHIP 560 5% 1/10W
R831	1-216-089-00	s	METAL, CHIP 47K 5% 1/10W
R832	1-216-065-00	s	METAL, CHIP 4.7K 5% 1/10W
R833	1-216-049-00	s	METAL, CHIP 1K 5% 1/10W
R834	1-216-079-00	s	METAL, CHIP 18K 5% 1/10W
R835	1-216-081-00	s	METAL, CHIP 22K 5% 1/10W
R836	1-216-059-00	s	METAL, CHIP 2.7K 5% 1/10W
R837	1-216-049-00	s	METAL, CHIP 1K 5% 1/10W
R838	1-216-049-00	s	METAL, CHIP 1K 5% 1/10W

(AU-147P BOARD)

Ref. No. or Q'ty	Part No.	SP	Description
R839	1-249-387-11	s	CARBON 3.3 5% 1/4W
R840	1-249-387-11	s	CARBON 3.3 5% 1/4W
R841	1-216-093-00	s	METAL, CHIP 68K 5% 1/10W
R842	1-216-073-00	s	METAL, CHIP 10K 5% 1/10W
R843	1-216-065-00	s	METAL, CHIP 4.7K 5% 1/10W
R844	1-249-381-11	s	CARBON 1 5% 1/4W
R851	1-216-089-00	s	METAL, CHIP 47K 5% 1/10W
R852	1-216-065-00	s	METAL, CHIP 4.7K 5% 1/10W
R853	1-216-049-00	s	METAL, CHIP 1K 5% 1/10W
R854	1-216-079-00	s	METAL, CHIP 18K 5% 1/10W
R855	1-216-081-00	s	METAL, CHIP 22K 5% 1/10W
R856	1-216-059-00	s	METAL, CHIP 2.7K 5% 1/10W
R857	1-216-049-00	s	METAL, CHIP 1K 5% 1/10W
R858	1-216-049-00	s	METAL, CHIP 1K 5% 1/10W
R859	1-249-387-11	s	CARBON 3.3 5% 1/4W
R860	1-249-387-11	s	CARBON 3.3 5% 1/4W
R861	1-216-093-00	s	METAL, CHIP 68K 5% 1/10W
R862	1-216-073-00	s	METAL, CHIP 10K 5% 1/10W
R863	1-216-065-00	s	METAL, CHIP 4.7K 5% 1/10W
R864	1-249-381-11	s	CARBON 1 5% 1/4W
R871	1-216-089-00	s	METAL, CHIP 47K 5% 1/10W
R872	1-216-065-00	s	METAL, CHIP 4.7K 5% 1/10W
R873	1-216-049-00	s	METAL, CHIP 1K 5% 1/10W
R874	1-216-059-00	s	METAL, CHIP 2.7K 5% 1/10W
R875	1-216-081-00	s	METAL, CHIP 22K 5% 1/10W
R877	1-216-049-00	s	METAL, CHIP 1K 5% 1/10W
R878	1-216-049-00	s	METAL, CHIP 1K 5% 1/10W
R879	1-249-387-11	s	CARBON 3.3 5% 1/4W
R880	1-249-387-11	s	CARBON 3.3 5% 1/4W
R884	1-249-381-11	s	CARBON 1 5% 1/4W
R891	1-216-121-00	s	METAL, CHIP 1M 5% 1/10W
R892	1-216-089-00	s	METAL, CHIP 47K 5% 1/10W
R893	1-216-065-00	s	METAL, CHIP 4.7K 5% 1/10W
R894	1-216-095-00	s	METAL, CHIP 82K 5% 1/10W
R895	1-216-089-00	s	METAL, CHIP 47K 5% 1/10W
R896	1-216-049-00	s	METAL, CHIP 1K 5% 1/10W
R897	1-216-121-00	s	METAL, CHIP 1M 5% 1/10W
R898	1-216-121-00	s	METAL, CHIP 1M 5% 1/10W
R899	1-216-121-00	s	METAL, CHIP 1M 5% 1/10W
R701	1-216-089-00	s	METAL, CHIP 47K 5% 1/10W
R702	1-216-069-00	s	METAL, CHIP 6.8K 5% 1/10W
R703	1-216-051-00	s	METAL, CHIP 1.2K 5% 1/10W
R704	1-216-081-00	s	METAL, CHIP 22K 5% 1/10W
R705	1-216-093-00	s	METAL, CHIP 68K 5% 1/10W
R706	1-216-049-00	s	METAL, CHIP 1K 5% 1/10W
R707	1-216-049-00	s	METAL, CHIP 1K 5% 1/10W
R708	1-216-295-00	s	METAL, CHIP 0-OHM
R709	1-216-053-00	s	METAL, CHIP 1.5K 5% 1/10W
R710	1-216-041-00	s	METAL, CHIP 470 5% 1/10W
R712	1-216-043-00	s	METAL, CHIP 560 5% 1/10W
R713	1-216-043-00	s	METAL, CHIP 560 5% 1/10W
R801	1-249-411-11	s	CARBON 330 5% 1/4W
R802	1-216-049-00	s	METAL, CHIP 1K 5% 1/10W
R803	1-216-636-11	s	METAL, CHIP 240 0.5% 1/10W
R804	1-249-411-11	s	CARBON 330 5% 1/4W
R805	1-216-049-00	s	METAL, CHIP 1K 5% 1/10W
R806	1-216-634-11	s	METAL, CHIP 200 0.5% 1/10W
R901	1-216-691-11	s	METAL, CHIP 47K 0.5% 1/10W
R902	1-216-691-11	s	METAL, CHIP 47K 0.5% 1/10W

(AU-147P BOARD)

Ref. No. or Q'ty	Part No.	SP	Description
R903	1-216-697-11	s	METAL, CHIP 82K 0.5% 1/10W
R904	1-216-693-11	s	METAL, CHIP 56K 0.5% 1/10W
R905	1-216-109-00	s	METAL, CHIP 330K 5% 1/10W
R906	1-216-081-00	s	METAL, CHIP 22K 5% 1/10W
R907	1-216-089-00	s	METAL, CHIP 47K 5% 1/10W
R908	1-216-105-00	s	METAL, CHIP 220K 5% 1/10W
R909	1-216-081-00	s	METAL, CHIP 22K 5% 1/10W
R910	1-216-667-11	s	METAL, CHIP 4.7K 0.5% 1/10W
R911	1-216-667-11	s	METAL, CHIP 4.7K 0.5% 1/10W
R912	1-216-057-00	s	METAL, CHIP 2.2K 5% 1/10W
RV101	1-237-036-11	s	RES, ADJ, METAL 10K
RV102	1-237-036-11	s	RES, ADJ, METAL 10K
RV103	1-237-035-11	s	RES, ADJ, METAL 5K
RV104	1-237-037-11	s	RES, ADJ, METAL 20K
RV105	1-237-035-11	s	RES, ADJ, METAL 5K
RV106	1-237-034-11	s	RES, ADJ, METAL 2K
RV107	1-237-037-11	s	RES, ADJ, METAL 20K
RV108	1-237-035-11	s	RES, ADJ, METAL 5K
RV201	1-237-036-11	s	RES, ADJ, METAL 10K
RV202	1-237-036-11	s	RES, ADJ, METAL 10K
RV203	1-237-035-11	s	RES, ADJ, METAL 5K
RV204	1-237-037-11	s	RES, ADJ, METAL 20K
RV205	1-237-035-11	s	RES, ADJ, METAL 5K
RV206	1-237-034-11	s	RES, ADJ, METAL 2K
RV207	1-237-037-11	s	RES, ADJ, METAL 20K
RV208	1-237-035-11	s	RES, ADJ, METAL 5K
RV301	1-237-036-11	s	RES, ADJ, METAL 10K
RV302	1-237-036-11	s	RES, ADJ, METAL 10K
RV303	1-237-035-11	s	RES, ADJ, METAL 5K
RV304	1-237-033-11	s	RES, ADJ, METAL 1K
RV351	1-237-036-11	s	RES, ADJ, METAL 10K
RV352	1-237-036-11	s	RES, ADJ, METAL 10K
RV401	1-237-036-11	s	RES, ADJ, METAL 10K
RV402	1-237-036-11	s	RES, ADJ, METAL 10K
RV403	1-237-035-11	s	RES, ADJ, METAL 5K
RV404	1-237-033-11	s	RES, ADJ, METAL 1K
RV451	1-237-036-11	s	RES, ADJ, METAL 10K
RV452	1-237-036-11	s	RES, ADJ, METAL 10K
RV601	1-237-035-11	s	RES, ADJ, METAL 5K
RV602	1-237-034-11	s	RES, ADJ, METAL 2K
RV701	1-237-035-11	s	RES, ADJ, METAL 5K
RV702	1-237-034-11	s	RES, ADJ, METAL 2K
RV901	1-237-039-11	s	RES, ADJ, METAL 100K
RY631	1-515-434-00	s	RELAY, REED
RY651	1-515-434-00	s	RELAY, REED
T631	1-424-511-11	s	TRANSFORMER, FE
T651	1-424-511-11	s	TRANSFORMER, FE
T671	1-424-511-11	s	TRANSFORMER, FE
X691	1-567-160-21	s	RESONATOR, CERAMIC 4.19MHz

CL-25 BOARD

Ref. No. or Q'ty	Part No.	SP	Description
1pc	1-640-170-12	o	PRINTED CIRCUIT BOARD, CL-25
1pc	3-171-424-01	o	HOLDER, SENSOR
C1	1-161-051-00	s	CERAMIC 0.01uF 10% 50V
CN930	1-506-477-11	s	CONNECTOR, 12P, MALE
CN931	1-506-467-11	s	CONNECTOR, 2P, MALE
CN933	1-573-599-11	s	CONNECTOR, SOCKET 5P
CN935	1-506-467-11	s	CONNECTOR, 2P, MALE
D1	8-719-938-07	s	LED GL480, INFRARED
D2	8-719-938-07	s	LED GL480, INFRARED
Q1	8-729-903-81	s	PHOTOTRANSISTOR PT480
Q2	8-729-903-81	s	PHOTOTRANSISTOR PT480
R1	1-249-414-11	s	CARBON 560 5% 1/4W
R2	1-249-414-11	s	CARBON 560 5% 1/4W

CP-175 BOARD

Ref. No. or Q'ty	Part No.	SP	Description
1pc	A-6713-466-A	o	MOUNTED CIRCUIT BOARD, CP-175
C101	1-124-910-11	s	ELECT 47uF 20% 50V
C102	1-124-910-11	s	ELECT 47uF 20% 50V
C103	1-163-275-11	s	CERAMIC, CHIP 0.001uF 5% 50V
C104	1-163-113-00	s	CERAMIC, CHIP 68PF 5% 50V
C105	1-163-113-00	s	CERAMIC, CHIP 68PF 5% 50V
C106	1-124-907-11	s	ELECT 10uF 20% 50V
C107	1-163-133-00	s	CERAMIC, CHIP 470PF 5% 50V
C108	1-163-133-00	s	CERAMIC, CHIP 470PF 5% 50V
C109	1-163-133-00	s	CERAMIC, CHIP 470PF 5% 50V
C110	1-163-133-00	s	CERAMIC, CHIP 470PF 5% 50V
C201	1-124-910-11	s	ELECT 47uF 20% 50V
C202	1-124-910-11	s	ELECT 47uF 20% 50V
C203	1-163-275-11	s	CERAMIC, CHIP 0.001uF 5% 50V
C204	1-163-113-00	s	CERAMIC, CHIP 68PF 5% 50V
C205	1-163-113-00	s	CERAMIC, CHIP 68PF 5% 50V
C206	1-124-907-11	s	ELECT 10uF 20% 50V
C207	1-163-133-00	s	CERAMIC, CHIP 470PF 5% 50V
C208	1-163-133-00	s	CERAMIC, CHIP 470PF 5% 50V
C209	1-163-133-00	s	CERAMIC, CHIP 470PF 5% 50V
C210	1-163-133-00	s	CERAMIC, CHIP 470PF 5% 50V
C301	1-124-910-11	s	ELECT 47uF 20% 50V
C302	1-124-910-11	s	ELECT 47uF 20% 50V
C303	1-163-275-11	s	CERAMIC, CHIP 0.001uF 5% 50V
C304	1-163-113-00	s	CERAMIC, CHIP 68PF 5% 50V
C305	1-163-113-00	s	CERAMIC, CHIP 68PF 5% 50V
C306	1-124-907-11	s	ELECT 10uF 20% 50V
C307	1-163-133-00	s	CERAMIC, CHIP 470PF 5% 50V
C308	1-163-133-00	s	CERAMIC, CHIP 470PF 5% 50V
C309	1-163-133-00	s	CERAMIC, CHIP 470PF 5% 50V
C310	1-163-133-00	s	CERAMIC, CHIP 470PF 5% 50V
C401	1-124-910-11	s	ELECT 47uF 20% 50V
C402	1-124-910-11	s	ELECT 47uF 20% 50V
C403	1-163-275-11	s	CERAMIC, CHIP 0.001uF 5% 50V
C404	1-163-113-00	s	CERAMIC, CHIP 68PF 5% 50V
C405	1-163-113-00	s	CERAMIC, CHIP 68PF 5% 50V
C406	1-124-907-11	s	ELECT 10uF 20% 50V
C407	1-163-133-00	s	CERAMIC, CHIP 470PF 5% 50V
C408	1-163-133-00	s	CERAMIC, CHIP 470PF 5% 50V
C409	1-163-133-00	s	CERAMIC, CHIP 470PF 5% 50V
C410	1-163-133-00	s	CERAMIC, CHIP 470PF 5% 50V
C501	1-126-103-11	s	ELECT 470uF 20% 16V
C502	1-126-103-11	s	ELECT 470uF 20% 16V
C503	1-124-910-11	s	ELECT 47uF 20% 50V
C504	1-124-910-11	s	ELECT 47uF 20% 50V
CN1	1-573-594-11	s	CONNECTOR, XLR 3P, FEMALE
CN2	1-573-594-11	s	CONNECTOR, XLR 3P, FEMALE
CN3	1-573-594-11	s	CONNECTOR, XLR 3P, FEMALE
CN4	1-573-594-11	s	CONNECTOR, XLR 3P, FEMALE
CN5	1-573-593-11	s	CONNECTOR, XLR 3P, MALE
CN6	1-573-593-11	s	CONNECTOR, XLR 3P, MALE
CN7	1-573-593-11	s	CONNECTOR, XLR 3P, MALE
CN8	1-573-593-11	s	CONNECTOR, XLR 3P, MALE
CN9	1-573-593-11	s	CONNECTOR, XLR 3P, MALE
CN10	1-573-593-11	s	CONNECTOR, XLR 3P, MALE
CN400	1-580-562-11	o	CONNECTOR, LY 14P, MALE
CN401	1-580-567-11	s	CONNECTOR, LY 24P, MALE

(CP-175 BOARD)

Ref. No. or Q'ty	Part No.	SP	Description
COP101	1-565-413-11	o	PLUG, SHORTING
COP201	1-565-413-11	o	PLUG, SHORTING
COP301	1-565-413-11	o	PLUG, SHORTING
COP401	1-565-413-11	o	PLUG, SHORTING
COR101	1-566-388-11	s	CONNECTOR, 8P, MALE
COR201	1-566-388-11	s	CONNECTOR, 8P, MALE
COR301	1-566-388-11	s	CONNECTOR, 8P, MALE
COR401	1-566-388-11	s	CONNECTOR, 8P, MALE
D101	8-719-800-76	s	DIODE 1SS226
D102	8-719-800-76	s	DIODE 1SS226
D201	8-719-800-76	s	DIODE 1SS226
D202	8-719-800-76	s	DIODE 1SS226
D301	8-719-800-76	s	DIODE 1SS226
D302	8-719-800-76	s	DIODE 1SS226
D401	8-719-800-76	s	DIODE 1SS226
D402	8-719-800-76	s	DIODE 1SS226
IC101	8-759-106-02	s	IC UPC4570G2
IC102	8-759-982-03	s	IC RC5532DD
IC201	8-759-106-02	s	IC UPC4570G2
IC301	8-759-106-02	s	IC UPC4570G2
IC302	8-759-982-03	s	IC RC5532DD
IC401	8-759-106-02	s	IC UPC4570G2
L101	1-410-380-31	s	INDUCTOR, CHIP 8.2uH
L102	1-410-380-31	s	INDUCTOR, CHIP 8.2uH
L201	1-410-380-31	s	INDUCTOR, CHIP 8.2uH
L202	1-410-380-31	s	INDUCTOR, CHIP 8.2uH
L301	1-410-380-31	s	INDUCTOR, CHIP 8.2uH
L302	1-410-380-31	s	INDUCTOR, CHIP 8.2uH
L401	1-410-380-31	s	INDUCTOR, CHIP 8.2uH
L402	1-410-380-31	s	INDUCTOR, CHIP 8.2uH
Q501	8-729-180-93	s	TRANSISTOR 2SD809
Q502	8-729-173-13	s	TRANSISTOR 2SB731
R101	1-215-423-00	s	METAL 1.2K 1% 1/6W
R102	1-215-424-00	s	METAL 1.3K 1% 1/6W
R103	1-216-668-11	s	METAL, CHIP 5.1K 0.5% 1/10W
R104	1-216-668-11	s	METAL, CHIP 5.1K 0.5% 1/10W
R105	1-216-654-11	s	METAL, CHIP 1.3K 0.5% 1/10W
R106	1-216-653-11	s	METAL, CHIP 1.2K 0.5% 1/10W
R107	1-216-657-11	s	METAL, CHIP 1.8K 0.5% 1/10W
R108	1-216-660-11	s	METAL, CHIP 2.4K 0.5% 1/10W
R109	1-216-654-11	s	METAL, CHIP 1.3K 0.5% 1/10W
R110	1-216-635-11	s	METAL, CHIP 220 0.5% 1/10W
R111	1-216-699-11	s	METAL, CHIP 100K 0.5% 1/10W
R112	1-216-696-11	s	METAL, CHIP 75K 0.5% 1/10W
R113	1-216-663-11	s	METAL, CHIP 3.3K 0.5% 1/10W
R114	1-216-699-11	s	METAL, CHIP 100K 0.5% 1/10W
R115	1-216-699-11	s	METAL, CHIP 100K 0.5% 1/10W
R116	1-216-607-11	s	METAL CHIP 15 0.50% 1/10W
R117	1-216-629-11	s	METAL, CHIP 120 0.5% 1/10W
R118	1-216-626-11	s	METAL FILM CHIP 91 0.50% 1/10W
R119	1-216-662-11	s	METAL, CHIP 3K 0.5% 1/10W
R120	1-216-662-11	s	METAL, CHIP 3K 0.5% 1/10W
R121	1-216-667-11	s	METAL, CHIP 4.7K 0.5% 1/10W
R122	1-216-667-11	s	METAL, CHIP 4.7K 0.5% 1/10W
R123	1-216-667-11	s	METAL, CHIP 4.7K 0.5% 1/10W
R124	1-216-667-11	s	METAL, CHIP 4.7K 0.5% 1/10W
R125	1-216-081-00	s	METAL, CHIP 22K 5% 1/10W

(CP-175 BOARD)

Ref. No. or Q'ty	Part No.	SP	Description
R201	1-215-423-00	s	METAL 1.2K 1% 1/6W
R202	1-215-424-00	s	METAL 1.3K 1% 1/6W
R203	1-216-668-11	s	METAL, CHIP 5.1K 0.5% 1/10W
R204	1-216-668-11	s	METAL, CHIP 5.1K 0.5% 1/10W
R205	1-216-654-11	s	METAL, CHIP 1.3K 0.5% 1/10W
R206	1-216-653-11	s	METAL, CHIP 1.2K 0.5% 1/10W
R207	1-216-657-11	s	METAL, CHIP 1.8K 0.5% 1/10W
R208	1-216-660-11	s	METAL, CHIP 2.4K 0.5% 1/10W
R209	1-216-654-11	s	METAL, CHIP 1.3K 0.5% 1/10W
R210	1-216-635-11	s	METAL, CHIP 220 0.5% 1/10W
R211	1-216-699-11	s	METAL, CHIP 100K 0.5% 1/10W
R212	1-216-696-11	s	METAL, CHIP 75K 0.5% 1/10W
R213	1-216-663-11	s	METAL, CHIP 3.3K 0.5% 1/10W
R214	1-216-699-11	s	METAL, CHIP 100K 0.5% 1/10W
R215	1-216-699-11	s	METAL, CHIP 100K 0.5% 1/10W
R216	1-216-607-11	s	METAL CHIP 15 0.50% 1/10W
R217	1-216-629-11	s	METAL, CHIP 120 0.5% 1/10W
R218	1-216-626-11	s	METAL FILM CHIP 91 0.50% 1/10W
R219	1-216-662-11	s	METAL, CHIP 3K 0.5% 1/10W
R220	1-216-662-11	s	METAL, CHIP 3K 0.5% 1/10W
R221	1-216-667-11	s	METAL, CHIP 4.7K 0.5% 1/10W
R222	1-216-667-11	s	METAL, CHIP 4.7K 0.5% 1/10W
R223	1-216-667-11	s	METAL, CHIP 4.7K 0.5% 1/10W
R224	1-216-667-11	s	METAL, CHIP 4.7K 0.5% 1/10W
R225	1-216-081-00	s	METAL, CHIP 22K 5% 1/10W
R301	1-215-423-00	s	METAL 1.2K 1% 1/6W
R302	1-215-424-00	s	METAL 1.3K 1% 1/6W
R303	1-216-668-11	s	METAL, CHIP 5.1K 0.5% 1/10W
R304	1-216-668-11	s	METAL, CHIP 5.1K 0.5% 1/10W
R305	1-216-654-11	s	METAL, CHIP 1.3K 0.5% 1/10W
R306	1-216-653-11	s	METAL, CHIP 1.2K 0.5% 1/10W
R307	1-216-657-11	s	METAL, CHIP 1.8K 0.5% 1/10W
R308	1-216-660-11	s	METAL, CHIP 2.4K 0.5% 1/10W
R309	1-216-654-11	s	METAL, CHIP 1.3K 0.5% 1/10W
R310	1-216-635-11	s	METAL, CHIP 220 0.5% 1/10W
R311	1-216-699-11	s	METAL, CHIP 100K 0.5% 1/10W
R312	1-216-696-11	s	METAL, CHIP 75K 0.5% 1/10W
R313	1-216-663-11	s	METAL, CHIP 3.3K 0.5% 1/10W
R314	1-216-699-11	s	METAL, CHIP 100K 0.5% 1/10W
R315	1-216-699-11	s	METAL, CHIP 100K 0.5% 1/10W
R316	1-216-607-11	s	METAL CHIP 15 0.50% 1/10W
R317	1-216-629-11	s	METAL, CHIP 120 0.5% 1/10W
R318	1-216-626-11	s	METAL FILM CHIP 91 0.50% 1/10W
R319	1-216-662-11	s	METAL, CHIP 3K 0.5% 1/10W
R320	1-216-662-11	s	METAL, CHIP 3K 0.5% 1/10W
R321	1-216-667-11	s	METAL, CHIP 4.7K 0.5% 1/10W
R322	1-216-667-11	s	METAL, CHIP 4.7K 0.5% 1/10W
R323	1-216-667-11	s	METAL, CHIP 4.7K 0.5% 1/10W
R324	1-216-667-11	s	METAL, CHIP 4.7K 0.5% 1/10W
R325	1-216-081-00	s	METAL, CHIP 22K 5% 1/10W
R401	1-215-423-00	s	METAL 1.2K 1% 1/6W
R402	1-215-424-00	s	METAL 1.3K 1% 1/6W
R403	1-216-668-11	s	METAL, CHIP 5.1K 0.5% 1/10W
R404	1-216-668-11	s	METAL, CHIP 5.1K 0.5% 1/10W
R405	1-216-654-11	s	METAL, CHIP 1.3K 0.5% 1/10W
R406	1-216-653-11	s	METAL, CHIP 1.2K 0.5% 1/10W
R407	1-216-657-11	s	METAL, CHIP 1.8K 0.5% 1/10W
R408	1-216-660-11	s	METAL, CHIP 2.4K 0.5% 1/10W
R409	1-216-654-11	s	METAL, CHIP 1.3K 0.5% 1/10W

(CP-175 BOARD)

Ref. No. or Q'ty	Part No.	SP	Description
R410	1-216-635-11	s	METAL, CHIP 220 0.5% 1/10W
R411	1-216-699-11	s	METAL, CHIP 100K 0.5% 1/10W
R412	1-216-696-11	s	METAL, CHIP 75K 0.5% 1/10W
R413	1-216-663-11	s	METAL, CHIP 3.3K 0.5% 1/10W
R414	1-216-699-11	s	METAL, CHIP 100K 0.5% 1/10W
R415	1-216-699-11	s	METAL, CHIP 100K 0.5% 1/10W
R416	1-216-607-11	s	METAL CHIP 15 0.50% 1/10W
R417	1-216-629-11	s	METAL, CHIP 120 0.5% 1/10W
R418	1-216-626-11	s	METAL FILM CHIP 91 0.50% 1/10W
R419	1-216-662-11	s	METAL, CHIP 3K 0.5% 1/10W
R420	1-216-662-11	s	METAL, CHIP 3K 0.5% 1/10W
R421	1-216-667-11	s	METAL, CHIP 4.7K 0.5% 1/10W
R422	1-216-667-11	s	METAL, CHIP 4.7K 0.5% 1/10W
R423	1-216-667-11	s	METAL, CHIP 4.7K 0.5% 1/10W
R424	1-216-667-11	s	METAL, CHIP 4.7K 0.5% 1/10W
R425	1-216-081-00	s	METAL, CHIP 22K 5% 1/10W
R501	1-249-411-11	s	CARBON 330 5% 1/4W
R502	1-249-411-11	s	CARBON 330 5% 1/4W
S101	1-554-958-11	s	SWITCH, SLIDE
S102	1-571-062-11	s	SWITCH, SLIDE
S201	1-554-958-11	s	SWITCH, SLIDE
S202	1-571-062-11	s	SWITCH, SLIDE
S301	1-554-958-11	s	SWITCH, SLIDE
S302	1-571-062-11	s	SWITCH, SLIDE
S401	1-554-958-11	s	SWITCH, SLIDE
S402	1-571-062-11	s	SWITCH, SLIDE

CP-185 BOARD

Ref. No. or Q'ty	Part No.	SP	Description
1pc	A-6713-467-A	o	MOUNTED CIRCUIT BOARD, CP-185
C1	1-124-907-11	s	ELECT 10uF 20% 50V
C2	1-163-088-00	s	CERAMIC, CHIP 5PF 50V
C3	1-124-120-11	s	ELECT 220uF 20% 25V
C4	1-124-120-11	s	ELECT 220uF 20% 25V
C11	1-124-907-11	s	ELECT 10uF 20% 50V
C12	1-124-443-00	s	ELECT 100uF 20% 10V
C13	1-124-443-00	s	ELECT 100uF 20% 10V
C14	1-124-443-00	s	ELECT 100uF 20% 10V
C101	1-163-235-11	s	CERAMIC, CHIP 22PF 5% 50V
C102	1-163-235-11	s	CERAMIC, CHIP 22PF 5% 50V
C103	1-164-004-11	s	CERAMIC, CHIP 0.1uF 10% 25V
C104	1-164-232-11	s	CERAMIC 0.01uF 10% 100V
C201	1-163-235-11	s	CERAMIC, CHIP 22PF 5% 50V
C202	1-163-235-11	s	CERAMIC, CHIP 22PF 5% 50V
C203	1-164-004-11	s	CERAMIC, CHIP 0.1uF 10% 25V
C301	1-164-004-11	s	CERAMIC, CHIP 0.1uF 10% 25V
C401	1-164-004-11	s	CERAMIC, CHIP 0.1uF 10% 25V
C402	1-164-232-11	s	CERAMIC 0.01uF 10% 100V
CN5	1-573-594-11	s	CONNECTOR, XLR 3P, FEMALE
CN6	1-573-593-11	s	CONNECTOR, XLR 3P, MALE
CN101	1-573-594-11	s	CONNECTOR, XLR 3P, FEMALE
CN201	1-573-594-11	s	CONNECTOR, XLR 3P, FEMALE
CN301	1-573-593-11	s	CONNECTOR, XLR 3P, MALE
CN401	1-573-593-11	s	CONNECTOR, XLR 3P, MALE
CN402	1-506-489-11	s	CONNECTOR, 10P, MALE
CN430	1-506-485-11	s	CONNECTOR, 6P, MALE
D101	8-719-800-76	s	DIODE 1SS226
D102	8-719-800-76	s	DIODE 1SS226
D201	8-719-800-76	s	DIODE 1SS226
D202	8-719-800-76	s	DIODE 1SS226
D301	8-719-800-76	s	DIODE 1SS226
D302	8-719-800-76	s	DIODE 1SS226
D401	8-719-800-76	s	DIODE 1SS226
D402	8-719-800-76	s	DIODE 1SS226
IC1	8-759-981-85	s	IC RC4556D
IC101	8-759-942-37	s	IC SN75179BP
IC301	8-759-942-37	s	IC SN75179BP
L11	1-412-533-11	s	INDUCTOR 47uH
Q11	8-729-159-65	s	TRANSISTOR 2SD596-DV5
R1	1-216-699-11	s	METAL, CHIP 100K 0.5% 1/10W
R2	1-216-698-11	s	METAL, CHIP 100K 0.5% 1/10W
R3	1-216-675-11	s	METAL, CHIP 10K 0.5% 1/10W
R4	1-216-682-11	s	METAL, CHIP 20K 0.5% 1/10W
R5	1-216-686-11	s	METAL, CHIP 30K 0.5% 1/10W
R6	1-216-679-11	s	METAL, CHIP 15K 0.5% 1/10W
R7	1-216-679-11	s	METAL, CHIP 15K 0.5% 1/10W
R8	1-216-624-11	s	METAL, CHIP 75 0.5% 1/10W
R9	1-216-624-11	s	METAL, CHIP 75 0.5% 1/10W
R10	1-216-073-00	s	METAL, CHIP 10K 5% 1/10W
R11	1-216-073-00	s	METAL, CHIP 10K 5% 1/10W
R12	1-216-039-00	s	METAL, CHIP 390 5% 1/10W
R13	1-216-039-00	s	METAL, CHIP 390 5% 1/10W
R14	1-216-624-11	s	METAL, CHIP 75 0.5% 1/10W
R15	1-216-624-11	s	METAL, CHIP 75 0.5% 1/10W

(CP-185 BOARD)

Ref. No. or Q'ty	Part No.	SP	Description
R101	1-216-628-11	s	METAL, CHIP 110 0.5% 1/10W
R102	1-216-025-00	s	METAL, CHIP 100 5% 1/10W
R103	1-216-025-00	s	METAL, CHIP 100 5% 1/10W
R201	1-216-628-11	s	METAL, CHIP 110 0.5% 1/10W
R202	1-216-025-00	s	METAL, CHIP 100 5% 1/10W
R203	1-216-025-00	s	METAL, CHIP 100 5% 1/10W
R301	1-216-001-00	s	METAL, CHIP 10 5% 1/10W
R302	1-216-001-00	s	METAL, CHIP 10 5% 1/10W
R401	1-216-001-00	s	METAL, CHIP 10 5% 1/10W
R402	1-216-001-00	s	METAL, CHIP 10 5% 1/10W
T101	1-437-194-21	s	TRANSFORMER, PULSE
T201	1-437-194-21	s	TRANSFORMER, PULSE
T301	1-437-194-21	s	TRANSFORMER, PULSE
T401	1-437-194-21	s	TRANSFORMER, PULSE

CP-187 BOARD

Ref. No. or Q'ty	Part No.	SP	Description
1pc	A-6727-369-A	o	MOUNTED CIRCUIT BOARD, CP-187
C1	1-126-101-11	s	ELECT 100uF 20% 16V
C11	1-163-037-11	s	CERAMIC, CHIP 0.022uF 10% 25V
C12	1-163-037-11	s	CERAMIC, CHIP 0.022uF 10% 25V
C13	1-126-101-11	s	ELECT 100uF 20% 16V
C14	1-126-101-11	s	ELECT 100uF 20% 16V
C15	1-163-037-11	s	CERAMIC, CHIP 0.022uF 10% 25V
C16	1-163-037-11	s	CERAMIC, CHIP 0.022uF 10% 25V
C17	1-126-101-11	s	ELECT 100uF 20% 16V
C18	1-126-101-11	s	ELECT 100uF 20% 16V
CN001	1-573-581-11	s	CONNECTOR, BNC, FEMALE
CN002	1-573-584-11	s	CONNECTOR, BNC, FEMALE
CN410	1-506-490-21	s	CONNECTOR, 11P MALE (ANGLE TYPE)
IC1	8-759-982-21	s	IC RC78L05A
IC2	8-759-982-44	s	IC RC79L05A
Q1	8-729-117-32	s	TRANSISTOR 2SC4177
R1	1-216-624-11	s	METAL, CHIP 75 0.5% 1/10W
R2	1-216-097-00	s	METAL, CHIP 100K 5% 1/10W
R3	1-216-089-00	s	METAL, CHIP 47K 5% 1/10W
R4	1-216-041-00	s	METAL, CHIP 470 5% 1/10W
R5	1-216-619-11	s	METAL, CHIP 47 0.5% 1/10W
S1	1-570-157-51	s	SWITCH, SLIDE

DD-17 BOARD

Ref. No. or Q'ty	Part No.	SP	Description
1pc	A-6715-455-A	o	MOUNTED CIRCUIT BOARD, DD-17
1pc	3-172-462-01	o	HEAT SINK (C)
1pc	3-860-976-00	s	SHEET, HEAT RESISTING
1pc	2-371-561-00	s	BUSHING (P), INSULATING
7pcs	7-682-547-04	s	SCREW +B 3X6
2pcs	7-682-903-11	s	SCREW +PWH 3X6
C1	1-126-101-11	s	ELECT 100uF 20% 16V
C2	1-126-101-11	s	ELECT 100uF 20% 16V
C3	1-124-480-11	s	ELECT 470uF 20% 25V
C4	1-164-232-11	s	CERAMIC 0.01uF 10% 100V
C5	1-164-232-11	s	CERAMIC 0.01uF 10% 100V
C6	1-164-232-11	s	CERAMIC 0.01uF 10% 100V
C7	1-164-232-11	s	CERAMIC 0.01uF 10% 100V
C8	1-124-480-11	s	ELECT 470uF 20% 25V
C9	1-124-477-11	s	ELECT 47uF 20% 25V
C10	1-124-477-11	s	ELECT 47uF 20% 25V
C11	1-124-477-11	s	ELECT 47uF 20% 25V
C12	1-124-477-11	s	ELECT 47uF 20% 25V
CN1	1-564-210-00	o	CONNECTOR, 11-S 12P, MALE
CN2	1-566-763-11	o	CONNECTOR, 8P, MALE
CN3	1-508-901-00	o	CONNECTOR, 3P, MALE
D1	8-719-200-02	s	DIODE 10E2
IC1	8-759-108-77	s	IC CX877
IC2	8-759-908-17	s	IC TL082CPS
L1	1-410-478-11	s	INDUCTOR 47uH
L2	1-410-478-11	s	INDUCTOR 47uH
Q1	8-729-376-84	s	TRANSISTOR 2SA768-G
Q2	8-729-807-50	s	TRANSISTOR 2SD1623-R
Q3	8-729-101-07	s	TRANSISTOR 2SS79B
Q4	8-729-402-12	s	TRANSISTOR 2SD1276A
Q5	8-729-402-12	s	TRANSISTOR 2SD1276A
Q6	8-729-402-12	s	TRANSISTOR 2SD1276A
Q7	8-729-402-12	s	TRANSISTOR 2SD1276A
Q8	8-729-402-12	s	TRANSISTOR 2SD1276A
Q9	8-729-402-12	s	TRANSISTOR 2SD1276A
R1	1-216-073-00	s	METAL, CHIP 10K 5% 1/10W
R2	1-216-073-00	s	METAL, CHIP 10K 5% 1/10W
R3	⚠ 1-216-389-11	s	METAL 1 5% 3W
R4	1-216-089-00	s	METAL, CHIP 47K 5% 1/10W
R5	1-216-089-00	s	METAL, CHIP 47K 5% 1/10W
R6	1-216-065-00	s	METAL, CHIP 4.7K 5% 1/10W
R7	1-216-065-00	s	METAL, CHIP 4.7K 5% 1/10W
R8	1-216-065-00	s	METAL, CHIP 4.7K 5% 1/10W
R9	1-216-065-00	s	METAL, CHIP 4.7K 5% 1/10W
R10	1-216-065-00	s	METAL, CHIP 4.7K 5% 1/10W

DE-15 BOARD

Ref. No. or Q'ty	Part No.	SP	Description
1pc	1-622-606-11	o	PRINTED CIRCUIT BOARD, DE-15
1pc	1-559-266-11	o	FLAT CABLE
1pc	1-807-683-11	s	DME

DIF-11P BOARD

This boaed includes the DUS-359 and DUS-490 boards.

Ref. No. or Q'ty	Part No.	SP	Description
1pc	A-6727-364-A	o	MOUNTED CIRCUIT BOARD, DIF-11P
1pc	3-171-453-01	o	PLATE (L), SHIELD, CARD
1pc	3-171-454-02	o	SHEET (L), CARD
1pc	7-621-759-45	s	+PSW, 2.6X6
4pcs	3-672-754-01	o	HOLDER, PC BOARD
C1	1-126-154-11	s	ELECT 47uF 20% 6.3V
C2	1-163-037-11	s	CERAMIC, CHIP 0.022uF 10% 25V
C3	1-126-154-11	s	ELECT 47uF 20% 6.3V
C4	1-163-037-11	s	CERAMIC, CHIP 0.022uF 10% 25V
C5	1-126-160-11	s	ELECT 1uF 20% 50V
C6	1-163-037-11	s	CERAMIC, CHIP 0.022uF 10% 25V
C7	1-163-037-11	s	CERAMIC, CHIP 0.022uF 10% 25V
C8	1-163-037-11	s	CERAMIC, CHIP 0.022uF 10% 25V
C9	1-163-037-11	s	CERAMIC, CHIP 0.022uF 10% 25V
C10	1-126-154-11	s	ELECT 47uF 20% 6.3V
C11	1-163-037-11	s	CERAMIC, CHIP 0.022uF 10% 25V
C12	1-163-037-11	s	CERAMIC, CHIP 0.022uF 10% 25V
C13	1-163-097-00	s	CERAMIC, CHIP 15PF 5% 50V
C14	1-163-125-00	s	CERAMIC, CHIP 220PF 5% 50V
C15	1-126-154-11	s	ELECT 47uF 20% 6.3V
C16	1-163-109-00	s	CERAMIC, CHIP 47PF 5% 50V
C17	1-163-037-11	s	CERAMIC, CHIP 0.022uF 10% 25V
C18	1-163-037-11	s	CERAMIC, CHIP 0.022uF 10% 25V
C19	1-163-037-11	s	CERAMIC, CHIP 0.022uF 10% 25V
C20	1-163-037-11	s	CERAMIC, CHIP 0.022uF 10% 25V
C21	1-126-154-11	s	ELECT 47uF 20% 6.3V
C22	1-163-037-11	s	CERAMIC, CHIP 0.022uF 10% 25V
C26	1-163-037-11	s	CERAMIC, CHIP 0.022uF 10% 25V
C27	1-126-154-11	s	ELECT 47uF 20% 6.3V
C28	1-163-037-11	s	CERAMIC, CHIP 0.022uF 10% 25V
C29	1-163-037-11	s	CERAMIC, CHIP 0.022uF 10% 25V
C30	1-126-154-11	s	ELECT 47uF 20% 6.3V
C31	1-163-037-11	s	CERAMIC, CHIP 0.022uF 10% 25V
C40	1-126-154-11	s	ELECT 47uF 20% 6.3V
C41	1-163-037-11	s	CERAMIC, CHIP 0.022uF 10% 25V
C44	1-126-160-11	s	ELECT 1uF 20% 50V
C45	1-163-037-11	s	CERAMIC, CHIP 0.022uF 10% 25V
C46	1-163-037-11	s	CERAMIC, CHIP 0.022uF 10% 25V
C47	1-163-037-11	s	CERAMIC, CHIP 0.022uF 10% 25V
C48	1-163-037-11	s	CERAMIC, CHIP 0.022uF 10% 25V
C49	1-163-037-11	s	CERAMIC, CHIP 0.022uF 10% 25V
C54	1-126-160-11	s	ELECT 1uF 20% 50V
C55	1-163-037-11	s	CERAMIC, CHIP 0.022uF 10% 25V
C56	1-163-037-11	s	CERAMIC, CHIP 0.022uF 10% 25V
C57	1-163-037-11	s	CERAMIC, CHIP 0.022uF 10% 25V
C58	1-163-037-11	s	CERAMIC, CHIP 0.022uF 10% 25V
C59	1-163-037-11	s	CERAMIC, CHIP 0.022uF 10% 25V
C102	1-164-004-11	s	CERAMIC, CHIP 0.1uF 10% 25V
C109	1-163-093-00	s	CERAMIC, CHIP 8PF 50V
C110	1-124-584-00	s	ELECT 100uF 20% 10V
C111	1-163-245-11	s	CERAMIC 56PF 5% 50V
C112	1-164-004-11	s	CERAMIC, CHIP 0.1uF 10% 25V
C113	1-124-584-00	s	ELECT 100uF 20% 10V
C114	1-124-584-00	s	ELECT 100uF 20% 10V
C115	1-164-232-11	s	CERAMIC 0.01uF 10% 100V
C116	1-164-232-11	s	CERAMIC 0.01uF 10% 100V
C117	1-163-037-11	s	CERAMIC, CHIP 0.022uF 10% 25V

(DIF-11P BOARD)

Ref. No. or Q'ty	Part No.	SP	Description
C118	1-126-157-11	s	ELECT 10uF 20% 16V
C119	1-124-584-00	s	ELECT 100uF 20% 10V
C121	1-126-157-11	s	ELECT 10uF 20% 16V
C122	1-163-037-11	s	CERAMIC, CHIP 0.022uF 10% 25V
C123	1-163-067-00	s	CERAMIC, CHIP 4PF 50V
C124	1-164-004-11	s	CERAMIC, CHIP 0.1uF 10% 25V
C125	1-164-004-11	s	CERAMIC, CHIP 0.1uF 10% 25V
C126	1-164-004-11	s	CERAMIC, CHIP 0.1uF 10% 25V
C127	1-164-004-11	s	CERAMIC, CHIP 0.1uF 10% 25V
C128	1-163-037-11	s	CERAMIC, CHIP 0.022uF 10% 25V
C130	1-163-037-11	s	CERAMIC, CHIP 0.022uF 10% 25V
C131	1-163-037-11	s	CERAMIC, CHIP 0.022uF 10% 25V
C132	1-163-037-11	s	CERAMIC, CHIP 0.022uF 10% 25V
C133	1-163-037-11	s	CERAMIC, CHIP 0.022uF 10% 25V
C134	1-163-037-11	s	CERAMIC, CHIP 0.022uF 10% 25V
C135	1-163-037-11	s	CERAMIC, CHIP 0.022uF 10% 25V
C136	1-163-037-11	s	CERAMIC, CHIP 0.022uF 10% 25V
C137	1-126-160-11	s	ELECT 1uF 20% 50V
C138	1-126-160-11	s	ELECT 1uF 20% 50V
C139	1-164-004-11	s	CERAMIC, CHIP 0.1uF 10% 25V
C140	1-164-004-11	s	CERAMIC, CHIP 0.1uF 10% 25V
C141	1-124-589-11	s	ELECT 47uF 20% 16V
C142	1-163-037-11	s	CERAMIC, CHIP 0.022uF 10% 25V
C143	1-163-037-11	s	CERAMIC, CHIP 0.022uF 10% 25V
C147	1-163-037-11	s	CERAMIC, CHIP 0.022uF 10% 25V
C148	1-163-037-11	s	CERAMIC, CHIP 0.022uF 10% 25V
C150	1-163-037-11	s	CERAMIC, CHIP 0.022uF 10% 25V
C151	1-163-037-11	s	CERAMIC, CHIP 0.022uF 10% 25V
C152	1-124-589-11	s	ELECT 47uF 20% 16V
C153	1-124-589-11	s	ELECT 47uF 20% 16V
C154	1-124-589-11	s	ELECT 47uF 20% 16V
C155	1-124-589-11	s	ELECT 47uF 20% 16V
C156	1-163-037-11	s	CERAMIC, CHIP 0.022uF 10% 25V
C157	1-126-160-11	s	ELECT 1uF 20% 50V
C158	1-126-160-11	s	ELECT 1uF 20% 50V
C159	1-164-004-11	s	CERAMIC, CHIP 0.1uF 10% 25V
C160	1-164-004-11	s	CERAMIC, CHIP 0.1uF 10% 25V
C161	1-124-589-11	s	ELECT 47uF 20% 16V
C162	1-163-037-11	s	CERAMIC, CHIP 0.022uF 10% 25V
C163	1-163-037-11	s	CERAMIC, CHIP 0.022uF 10% 25V
C167	1-163-037-11	s	CERAMIC, CHIP 0.022uF 10% 25V
C168	1-163-037-11	s	CERAMIC, CHIP 0.022uF 10% 25V
C170	1-163-037-11	s	CERAMIC, CHIP 0.022uF 10% 25V
C171	1-163-037-11	s	CERAMIC, CHIP 0.022uF 10% 25V
C172	1-124-589-11	s	ELECT 47uF 20% 16V
C173	1-124-589-11	s	ELECT 47uF 20% 16V
C174	1-124-589-11	s	ELECT 47uF 20% 16V
C175	1-124-589-11	s	ELECT 47uF 20% 16V
C176	1-163-037-11	s	CERAMIC, CHIP 0.022uF 10% 25V
C178	1-163-037-11	s	CERAMIC, CHIP 0.022uF 10% 25V
C179	1-163-105-00	s	CERAMIC, CHIP 33PF 5% 50V
C180	1-163-251-11	s	CERAMIC, CHIP 100PF 5% 50V
C181	1-163-235-11	s	CERAMIC, CHIP 22PF 5% 50V
C182	1-163-251-11	s	CERAMIC, CHIP 100PF 5% 50V
C188	1-163-037-11	s	CERAMIC, CHIP 0.022uF 10% 25V
C189	1-163-037-11	s	CERAMIC, CHIP 0.022uF 10% 25V
C190	1-163-037-11	s	CERAMIC, CHIP 0.022uF 10% 25V
C191	1-163-037-11	s	CERAMIC, CHIP 0.022uF 10% 25V
C192	1-163-037-11	s	CERAMIC, CHIP 0.022uF 10% 25V

(DIF-11P BOARD)

Ref. No. or Q'ty	Part No.	SP	Description
C193	1-163-037-11	s	CERAMIC, CHIP 0.022uF 10% 25V
C194	1-163-037-11	s	CERAMIC, CHIP 0.022uF 10% 25V
C195	1-163-037-11	s	CERAMIC, CHIP 0.022uF 10% 25V
C196	1-163-037-11	s	CERAMIC, CHIP 0.022uF 10% 25V
C197	1-163-037-11	s	CERAMIC, CHIP 0.022uF 10% 25V
C198	1-163-037-11	s	CERAMIC, CHIP 0.022uF 10% 25V
C199	1-163-037-11	s	CERAMIC, CHIP 0.022uF 10% 25V
C200	1-163-037-11	s	CERAMIC, CHIP 0.022uF 10% 25V
C201	1-163-037-11	s	CERAMIC, CHIP 0.022uF 10% 25V
C202	1-163-037-11	s	CERAMIC, CHIP 0.022uF 10% 25V
C206	1-124-584-00	s	ELECT 100uF 20% 10V
C207	1-124-584-00	s	ELECT 100uF 20% 10V
C208	1-124-584-00	s	ELECT 100uF 20% 10V
C209	1-124-584-00	s	ELECT 100uF 20% 10V
C210	1-124-584-00	s	ELECT 100uF 20% 10V
C211	1-124-584-00	s	ELECT 100uF 20% 10V
C218	1-164-004-11	s	CERAMIC, CHIP 0.1uF 10% 25V
C219	1-164-004-11	s	CERAMIC, CHIP 0.1uF 10% 25V
C220	1-164-004-11	s	CERAMIC, CHIP 0.1uF 10% 25V
C221	1-164-004-11	s	CERAMIC, CHIP 0.1uF 10% 25V
C222	1-164-004-11	s	CERAMIC, CHIP 0.1uF 10% 25V
C223	1-164-004-11	s	CERAMIC, CHIP 0.1uF 10% 25V
C224	1-164-004-11	s	CERAMIC, CHIP 0.1uF 10% 25V
C225	1-164-004-11	s	CERAMIC, CHIP 0.1uF 10% 25V
C226	1-164-004-11	s	CERAMIC, CHIP 0.1uF 10% 25V
C227	1-164-004-11	s	CERAMIC, CHIP 0.1uF 10% 25V
C228	1-163-235-11	s	CERAMIC, CHIP 22PF 5% 50V
C229	1-163-235-11	s	CERAMIC, CHIP 22PF 5% 50V
C230	1-163-037-11	s	CERAMIC, CHIP 0.022uF 10% 25V
C231	1-163-037-11	s	CERAMIC, CHIP 0.022uF 10% 25V
C232	1-163-037-11	s	CERAMIC, CHIP 0.022uF 10% 25V
C233	1-124-584-00	s	ELECT 100uF 20% 10V
C234	1-163-037-11	s	CERAMIC, CHIP 0.022uF 10% 25V
C235	1-164-232-11	s	CERAMIC 0.01uF 10% 100V
C236	1-164-232-11	s	CERAMIC 0.01uF 10% 100V
C237	1-163-037-11	s	CERAMIC, CHIP 0.022uF 10% 25V
C400	1-124-584-00	s	ELECT 100uF 20% 10V
C401	1-163-037-11	s	CERAMIC, CHIP 0.022uF 10% 25V
C402	1-126-160-11	s	ELECT 1uF 20% 50V
C403	1-163-037-11	s	CERAMIC, CHIP 0.022uF 10% 25V
C404	1-130-488-00	s	MYLAR 0.027uF 5% 50V
C405	1-130-475-00	s	MYLAR 0.0022uF 5% 50V
C406	1-130-463-00	s	MYLAR 0.01uF 5% 50V
C407	1-130-475-00	s	MYLAR 0.0022uF 5% 50V
C408	1-130-475-00	s	MYLAR 0.0022uF 5% 50V
C409	1-130-475-00	s	MYLAR 0.0022uF 5% 50V
C410	1-163-227-11	s	CERAMIC, CHIP 10PF 5% 50V
C411	1-124-034-51	s	ELECT 33uF 20% 16V
C412	1-163-227-11	s	CERAMIC, CHIP 10PF 5% 50V
C413	1-124-477-11	s	ELECT 47uF 20% 25V
C415	1-124-477-11	s	ELECT 47uF 20% 25V
C416	1-124-477-11	s	ELECT 47uF 20% 25V
C417	1-126-233-11	s	ELECT 22uF 20% 50V
C419	1-163-037-11	s	CERAMIC, CHIP 0.022uF 10% 25V
C420	1-163-037-11	s	CERAMIC, CHIP 0.022uF 10% 25V
C421	1-163-037-11	s	CERAMIC, CHIP 0.022uF 10% 25V
C422	1-163-037-11	s	CERAMIC, CHIP 0.022uF 10% 25V
C423	1-126-233-11	s	ELECT 22uF 20% 50V
C424	1-126-233-11	s	ELECT 22uF 20% 50V

(DIF-11P BOARD)

Ref. No. or Q'ty	Part No.	SP	Description
C425	1-130-478-00	S	MYLAR 0.0039uF 5% 50V
C426	1-124-443-00	S	ELECT 100uF 20% 10V
C427	1-163-037-11	S	CERAMIC, CHIP 0.022uF 10% 25V
C428	1-163-037-11	S	CERAMIC, CHIP 0.022uF 10% 25V
C429	1-126-233-11	S	ELECT 22uF 20% 50V
C431	1-163-037-11	S	CERAMIC, CHIP 0.022uF 10% 25V
C432	1-163-037-11	S	CERAMIC, CHIP 0.022uF 10% 25V
C433	1-124-443-00	S	ELECT 100uF 20% 10V
C435	1-124-477-11	S	ELECT 47uF 20% 25V
C436	1-124-477-11	S	ELECT 47uF 20% 25V
C437	1-126-160-11	S	ELECT 1uF 20% 50V
C438	1-163-037-11	S	CERAMIC, CHIP 0.022uF 10% 25V
C439	1-130-488-00	S	MYLAR 0.027uF 5% 50V
C440	1-130-475-00	S	MYLAR 0.0022uF 5% 50V
C441	1-130-483-00	S	MYLAR 0.01uF 5% 50V
C442	1-130-475-00	S	MYLAR 0.0022uF 5% 50V
C443	1-130-475-00	S	MYLAR 0.0022uF 5% 50V
C444	1-130-475-00	S	MYLAR 0.0022uF 5% 50V
C445	1-163-227-11	S	CERAMIC, CHIP 10PF 5% 50V
C446	1-124-034-51	S	ELECT 33uF 20% 16V
C447	1-163-227-11	S	CERAMIC, CHIP 10PF 5% 50V
C448	1-124-477-11	S	ELECT 47uF 20% 25V
C450	1-124-477-11	S	ELECT 47uF 20% 25V
C451	1-124-477-11	S	ELECT 47uF 20% 25V
C452	1-126-233-11	S	ELECT 22uF 20% 50V
C454	1-163-037-11	S	CERAMIC, CHIP 0.022uF 10% 25V
C455	1-163-037-11	S	CERAMIC, CHIP 0.022uF 10% 25V
C456	1-163-037-11	S	CERAMIC, CHIP 0.022uF 10% 25V
C457	1-163-037-11	S	CERAMIC, CHIP 0.022uF 10% 25V
C458	1-126-233-11	S	ELECT 22uF 20% 50V
C459	1-126-233-11	S	ELECT 22uF 20% 50V
C460	1-130-478-00	S	MYLAR 0.0039uF 5% 50V
C461	1-124-443-00	S	ELECT 100uF 20% 10V
C462	1-163-037-11	S	CERAMIC, CHIP 0.022uF 10% 25V
C463	1-163-037-11	S	CERAMIC, CHIP 0.022uF 10% 25V
C464	1-126-233-11	S	ELECT 22uF 20% 50V
C466	1-163-037-11	S	CERAMIC, CHIP 0.022uF 10% 25V
C467	1-163-037-11	S	CERAMIC, CHIP 0.022uF 10% 25V
C468	1-124-443-00	S	ELECT 100uF 20% 10V
C470	1-124-477-11	S	ELECT 47uF 20% 25V
C471	1-124-477-11	S	ELECT 47uF 20% 25V
C472	1-124-584-00	S	ELECT 100uF 20% 10V
C473	1-163-037-11	S	CERAMIC, CHIP 0.022uF 10% 25V
C474	1-126-160-11	S	ELECT 1uF 20% 50V
C475	1-163-037-11	S	CERAMIC, CHIP 0.022uF 10% 25V
C476	1-130-488-00	S	MYLAR 0.027uF 5% 50V
C477	1-130-475-00	S	MYLAR 0.0022uF 5% 50V
C478	1-130-483-00	S	MYLAR 0.01uF 5% 50V
C479	1-130-475-00	S	MYLAR 0.0022uF 5% 50V
C480	1-130-475-00	S	MYLAR 0.0022uF 5% 50V
C481	1-130-475-00	S	MYLAR 0.0022uF 5% 50V
C482	1-163-227-11	S	CERAMIC, CHIP 10PF 5% 50V
C483	1-124-034-51	S	ELECT 33uF 20% 16V
C484	1-163-227-11	S	CERAMIC, CHIP 10PF 5% 50V
C485	1-124-477-11	S	ELECT 47uF 20% 25V
C487	1-124-477-11	S	ELECT 47uF 20% 25V
C488	1-124-477-11	S	ELECT 47uF 20% 25V
C489	1-126-233-11	S	ELECT 22uF 20% 50V
C491	1-163-037-11	S	CERAMIC, CHIP 0.022uF 10% 25V

(DIF-11P BOARD)

Ref. No. or Q'ty	Part No.	SP	Description
C492	1-163-037-11	S	CERAMIC, CHIP 0.022uF 10% 25V
C493	1-163-037-11	S	CERAMIC, CHIP 0.022uF 10% 25V
C494	1-163-037-11	S	CERAMIC, CHIP 0.022uF 10% 25V
C495	1-126-233-11	S	ELECT 22uF 20% 50V
C496	1-126-233-11	S	ELECT 22uF 20% 50V
C497	1-130-478-00	S	MYLAR 0.0039uF 5% 50V
C498	1-124-443-00	S	ELECT 100uF 20% 10V
C499	1-163-037-11	S	CERAMIC, CHIP 0.022uF 10% 25V
C500	1-163-037-11	S	CERAMIC, CHIP 0.022uF 10% 25V
C501	1-126-233-11	S	ELECT 22uF 20% 50V
C503	1-163-037-11	S	CERAMIC, CHIP 0.022uF 10% 25V
C504	1-163-037-11	S	CERAMIC, CHIP 0.022uF 10% 25V
C505	1-124-443-00	S	ELECT 100uF 20% 10V
C507	1-124-477-11	S	ELECT 47uF 20% 25V
C508	1-124-477-11	S	ELECT 47uF 20% 25V
C509	1-126-160-11	S	ELECT 1uF 20% 50V
C510	1-163-037-11	S	CERAMIC, CHIP 0.022uF 10% 25V
C511	1-130-488-00	S	MYLAR 0.027uF 5% 50V
C512	1-130-475-00	S	MYLAR 0.0022uF 5% 50V
C513	1-130-483-00	S	MYLAR 0.01uF 5% 50V
C514	1-130-475-00	S	MYLAR 0.0022uF 5% 50V
C515	1-130-475-00	S	MYLAR 0.0022uF 5% 50V
C516	1-130-475-00	S	MYLAR 0.0022uF 5% 50V
C517	1-163-227-11	S	CERAMIC, CHIP 10PF 5% 50V
C518	1-124-034-51	S	ELECT 33uF 20% 16V
C519	1-163-227-11	S	CERAMIC, CHIP 10PF 5% 50V
C520	1-124-477-11	S	ELECT 47uF 20% 25V
C522	1-124-477-11	S	ELECT 47uF 20% 25V
C523	1-124-477-11	S	ELECT 47uF 20% 25V
C524	1-126-233-11	S	ELECT 22uF 20% 50V
C526	1-163-037-11	S	CERAMIC, CHIP 0.022uF 10% 25V
C527	1-163-037-11	S	CERAMIC, CHIP 0.022uF 10% 25V
C528	1-163-037-11	S	CERAMIC, CHIP 0.022uF 10% 25V
C529	1-163-037-11	S	CERAMIC, CHIP 0.022uF 10% 25V
C530	1-126-233-11	S	ELECT 22uF 20% 50V
C531	1-126-233-11	S	ELECT 22uF 20% 50V
C532	1-130-478-00	S	MYLAR 0.0039uF 5% 50V
C533	1-124-443-00	S	ELECT 100uF 20% 10V
C534	1-163-037-11	S	CERAMIC, CHIP 0.022uF 10% 25V
C535	1-163-037-11	S	CERAMIC, CHIP 0.022uF 10% 25V
C536	1-126-233-11	S	ELECT 22uF 20% 50V
C538	1-163-037-11	S	CERAMIC, CHIP 0.022uF 10% 25V
C539	1-163-037-11	S	CERAMIC, CHIP 0.022uF 10% 25V
C540	1-124-443-00	S	ELECT 100uF 20% 10V
C542	1-124-477-11	S	ELECT 47uF 20% 25V
C543	1-124-477-11	S	ELECT 47uF 20% 25V
C544	1-163-037-11	S	CERAMIC, CHIP 0.022uF 10% 25V
C545	1-163-037-11	S	CERAMIC, CHIP 0.022uF 10% 25V
C546	1-163-037-11	S	CERAMIC, CHIP 0.022uF 10% 25V
C547	1-163-037-11	S	CERAMIC, CHIP 0.022uF 10% 25V
C548	1-163-037-11	S	CERAMIC, CHIP 0.022uF 10% 25V
C549	1-163-037-11	S	CERAMIC, CHIP 0.022uF 10% 25V
C550	1-163-037-11	S	CERAMIC, CHIP 0.022uF 10% 25V
C551	1-124-034-51	S	ELECT 33uF 20% 16V
C552	1-163-037-11	S	CERAMIC, CHIP 0.022uF 10% 25V
C553	1-163-037-11	S	CERAMIC, CHIP 0.022uF 10% 25V
C554	1-163-037-11	S	CERAMIC, CHIP 0.022uF 10% 25V
C555	1-163-037-11	S	CERAMIC, CHIP 0.022uF 10% 25V
C556	1-163-037-11	S	CERAMIC, CHIP 0.022uF 10% 25V

(DIF-11P BOARD)

Ref. No. or Q'ty	Part No.	SP	Description
C557	1-163-037-11	S	CERAMIC, CHIP 0.022uF 10% 25V
C558	1-124-034-51	S	ELECT 33uF 20% 16V
C559	1-163-037-11	S	CERAMIC, CHIP 0.022uF 10% 25V
C560	1-163-037-11	S	CERAMIC, CHIP 0.022uF 10% 25V
C561	1-163-037-11	S	CERAMIC, CHIP 0.022uF 10% 25V
C562	1-163-037-11	S	CERAMIC, CHIP 0.022uF 10% 25V
C563	1-163-037-11	S	CERAMIC, CHIP 0.022uF 10% 25V
C564	1-163-037-11	S	CERAMIC, CHIP 0.022uF 10% 25V
C565	1-124-034-51	S	ELECT 33uF 20% 16V
C566	1-163-037-11	S	CERAMIC, CHIP 0.022uF 10% 25V
C567	1-163-037-11	S	CERAMIC, CHIP 0.022uF 10% 25V
C568	1-163-037-11	S	CERAMIC, CHIP 0.022uF 10% 25V
C569	1-163-037-11	S	CERAMIC, CHIP 0.022uF 10% 25V
C570	1-163-037-11	S	CERAMIC, CHIP 0.022uF 10% 25V
C571	1-163-037-11	S	CERAMIC, CHIP 0.022uF 10% 25V
C572	1-124-034-51	S	ELECT 33uF 20% 16V
C573	1-163-037-11	S	CERAMIC, CHIP 0.022uF 10% 25V
C574	1-163-037-11	S	CERAMIC, CHIP 0.022uF 10% 25V
C575	1-163-037-11	S	CERAMIC, CHIP 0.022uF 10% 25V
C600	1-124-477-11	S	ELECT 47uF 20% 25V
C601	1-124-477-11	S	ELECT 47uF 20% 25V
C602	1-124-477-11	S	ELECT 47uF 20% 25V
C603	1-163-037-11	S	CERAMIC, CHIP 0.022uF 10% 25V
C604	1-126-160-11	S	ELECT 1uF 20% 50V
C605	1-124-477-11	S	ELECT 47uF 20% 25V
C606	1-130-479-00	S	MYLAR 0.0047uF 5% 50V
C607	1-163-227-11	S	CERAMIC, CHIP 10PF 5% 50V
C608	1-124-477-11	S	ELECT 47uF 20% 25V
C609	1-124-477-11	S	ELECT 47uF 20% 25V
C610	1-163-017-00	S	CERAMIC, CHIP 0.0047uF 5% 50V
C611	1-163-017-00	S	CERAMIC, CHIP 0.0047uF 5% 50V
C612	1-163-017-00	S	CERAMIC, CHIP 0.0047uF 5% 50V
C613	1-124-477-11	S	ELECT 47uF 20% 25V
C614	1-124-120-11	S	ELECT 220uF 20% 25V
C615	1-163-037-11	S	CERAMIC, CHIP 0.022uF 10% 25V
C616	1-126-233-11	S	ELECT 22uF 20% 50V
C617	1-126-233-11	S	ELECT 22uF 20% 50V
C618	1-163-037-11	S	CERAMIC, CHIP 0.022uF 10% 25V
C619	1-126-233-11	S	ELECT 22uF 20% 50V
C621	1-124-477-11	S	ELECT 47uF 20% 25V
C622	1-124-477-11	S	ELECT 47uF 20% 25V
C623	1-124-477-11	S	ELECT 47uF 20% 25V
C624	1-163-037-11	S	CERAMIC, CHIP 0.022uF 10% 25V
C625	1-126-160-11	S	ELECT 1uF 20% 50V
C626	1-124-477-11	S	ELECT 47uF 20% 25V
C627	1-130-479-00	S	MYLAR 0.0047uF 5% 50V
C628	1-163-227-11	S	CERAMIC, CHIP 10PF 5% 50V
C629	1-124-477-11	S	ELECT 47uF 20% 25V
C630	1-163-017-00	S	CERAMIC, CHIP 0.0047uF 5% 50V
C631	1-124-477-11	S	ELECT 47uF 20% 25V
C632	1-163-017-00	S	CERAMIC, CHIP 0.0047uF 5% 50V
C633	1-163-017-00	S	CERAMIC, CHIP 0.0047uF 5% 50V
C634	1-124-477-11	S	ELECT 47uF 20% 25V
C635	1-126-233-11	S	ELECT 22uF 20% 50V
C636	1-163-037-11	S	CERAMIC, CHIP 0.022uF 10% 25V
C637	1-126-233-11	S	ELECT 22uF 20% 50V
C638	1-126-233-11	S	ELECT 22uF 20% 50V
C639	1-163-037-11	S	CERAMIC, CHIP 0.022uF 10% 25V
C640	1-126-233-11	S	ELECT 22uF 20% 50V

(DIF-11P BOARD)

Ref. No. or Q'ty	Part No.	SP	Description
C641	1-124-120-11	S	ELECT 220uF 20% 25V
C642	1-124-120-11	S	ELECT 220uF 20% 25V
C643	1-163-037-11	S	CERAMIC, CHIP 0.022uF 10% 25V
C644	1-164-232-11	S	CERAMIC 0.01uF 10% 100V
C645	1-164-232-11	S	CERAMIC 0.01uF 10% 100V
C646	1-164-232-11	S	CERAMIC 0.01uF 10% 100V
C647	1-164-232-11	S	CERAMIC 0.01uF 10% 100V
C649	1-131-387-00	S	TANTALUM 22uF 10% 20V
C650	1-163-037-11	S	CERAMIC, CHIP 0.022uF 10% 25V
C651	1-124-120-11	S	ELECT 220uF 20% 25V
C652	1-163-037-11	S	CERAMIC, CHIP 0.022uF 10% 25V
C653	1-163-037-11	S	CERAMIC, CHIP 0.022uF 10% 25V
C654	1-126-233-11	S	ELECT 22uF 20% 50V
C657	1-163-037-11	S	CERAMIC, CHIP 0.022uF 10% 25V
C658	1-124-120-11	S	ELECT 220uF 20% 25V
C659	1-124-477-11	S	ELECT 47uF 20% 25V
C660	1-124-477-11	S	ELECT 47uF 20% 25V
C661	1-124-477-11	S	ELECT 47uF 20% 25V
C662	1-163-037-11	S	CERAMIC, CHIP 0.022uF 10% 25V
C663	1-126-160-11	S	ELECT 1uF 20% 50V
C664	1-124-477-11	S	ELECT 47uF 20% 25V
C665	1-130-479-00	S	MYLAR 0.0047uF 5% 50V
C666	1-163-227-11	S	CERAMIC, CHIP 10PF 5% 50V
C667	1-124-477-11	S	ELECT 47uF 20% 25V
C668	1-124-477-11	S	ELECT 47uF 20% 25V
C669	1-163-017-00	S	CERAMIC, CHIP 0.0047uF 5% 50V
C670	1-163-017-00	S	CERAMIC, CHIP 0.0047uF 5% 50V
C671	1-163-017-00	S	CERAMIC, CHIP 0.0047uF 5% 50V
C672	1-124-477-11	S	ELECT 47uF 20% 25V
C673	1-124-120-11	S	ELECT 220uF 20% 25V
C674	1-163-037-11	S	CERAMIC, CHIP 0.022uF 10% 25V
C675	1-126-233-11	S	ELECT 22uF 20% 50V
C676	1-126-233-11	S	ELECT 22uF 20% 50V
C677	1-163-037-11	S	CERAMIC, CHIP 0.022uF 10% 25V
C678	1-126-233-11	S	ELECT 22uF 20% 50V
C680	1-124-477-11	S	ELECT 47uF 20% 25V
C681	1-124-477-11	S	ELECT 47uF 20% 25V
C682	1-124-477-11	S	ELECT 47uF 20% 25V
C683	1-163-037-11	S	CERAMIC, CHIP 0.022uF 10% 25V
C684	1-126-160-11	S	ELECT 1uF 20% 50V
C685	1-124-477-11	S	ELECT 47uF 20% 25V
C686	1-130-479-00	S	MYLAR 0.0047uF 5% 50V
C687	1-163-227-11	S	CERAMIC, CHIP 10PF 5% 50V
C688	1-124-477-11	S	ELECT 47uF 20% 25V
C689	1-163-017-00	S	CERAMIC, CHIP 0.0047uF 5% 50V
C690	1-124-477-11	S	ELECT 47uF 20% 25V
C691	1-163-017-00	S	CERAMIC, CHIP 0.0047uF 5% 50V
C692	1-163-017-00	S	CERAMIC, CHIP 0.0047uF 5% 50V
C693	1-124-477-11	S	ELECT 47uF 20% 25V
C694	1-126-233-11	S	ELECT 22uF 20% 50V
C695	1-163-037-11	S	CERAMIC, CHIP 0.022uF 10% 25V
C696	1-126-233-11	S	ELECT 22uF 20% 50V
C697	1-126-233-11	S	ELECT 22uF 20% 50V
C698	1-163-037-11	S	CERAMIC, CHIP 0.022uF 10% 25V
C699	1-126-233-11	S	ELECT 22uF 20% 50V
C700	1-124-120-11	S	ELECT 220uF 20% 25V
C701	1-124-120-11	S	ELECT 220uF 20% 25V
C702	1-163-037-11	S	CERAMIC, CHIP 0.022uF 10% 25V
C703	1-164-232-11	S	CERAMIC 0.01uF 10% 100V

(DIF-11P BOARD)

Ref. No. or Q'ty	Part No.	SP	Description
C704	1-184-232-11	s	CERAMIC 0.01uF 10% 100V
C705	1-184-232-11	s	CERAMIC 0.01uF 10% 100V
C706	1-184-232-11	s	CERAMIC 0.01uF 10% 100V
C708	1-131-367-00	s	TANTALUM 22uF 10% 20V
C709	1-163-037-11	s	CERAMIC, CHIP 0.022uF 10% 25V
C710	1-124-120-11	s	ELECT 220uF 20% 25V
C711	1-163-037-11	s	CERAMIC, CHIP 0.022uF 10% 25V
C712	1-163-037-11	s	CERAMIC, CHIP 0.022uF 10% 25V
C713	1-126-233-11	s	ELECT 22uF 20% 50V
C716	1-163-037-11	s	CERAMIC, CHIP 0.022uF 10% 25V
C717	1-124-120-11	s	ELECT 220uF 20% 25V
C718	1-126-157-11	s	ELECT 10uF 20% 16V
C719	1-163-037-11	s	CERAMIC, CHIP 0.022uF 10% 25V
C720	1-163-037-11	s	CERAMIC, CHIP 0.022uF 10% 25V
C721	1-163-037-11	s	CERAMIC, CHIP 0.022uF 10% 25V
C722	1-163-037-11	s	CERAMIC, CHIP 0.022uF 10% 25V
C723	1-163-037-11	s	CERAMIC, CHIP 0.022uF 10% 25V
C724	1-163-037-11	s	CERAMIC, CHIP 0.022uF 10% 25V
C725	1-163-037-11	s	CERAMIC, CHIP 0.022uF 10% 25V
C726	1-163-037-11	s	CERAMIC, CHIP 0.022uF 10% 25V
C727	1-163-037-11	s	CERAMIC, CHIP 0.022uF 10% 25V
C728	1-163-037-11	s	CERAMIC, CHIP 0.022uF 10% 25V
C729	1-163-037-11	s	CERAMIC, CHIP 0.022uF 10% 25V
C730	1-163-037-11	s	CERAMIC, CHIP 0.022uF 10% 25V
C740	1-163-037-11	s	CERAMIC, CHIP 0.022uF 10% 25V
C741	1-163-037-11	s	CERAMIC, CHIP 0.022uF 10% 25V
C742	1-163-037-11	s	CERAMIC, CHIP 0.022uF 10% 25V
C743	1-163-037-11	s	CERAMIC, CHIP 0.022uF 10% 25V
C744	1-163-037-11	s	CERAMIC, CHIP 0.022uF 10% 25V
C745	1-163-037-11	s	CERAMIC, CHIP 0.022uF 10% 25V
C746	1-163-037-11	s	CERAMIC, CHIP 0.022uF 10% 25V
C800	1-164-004-11	s	CERAMIC, CHIP 0.1uF 10% 25V
C801	1-164-004-11	s	CERAMIC, CHIP 0.1uF 10% 25V
C802	1-163-121-00	s	CERAMIC, CHIP 150PF 5% 50V
C803	1-126-157-11	s	ELECT 10uF 20% 16V
C804	1-164-004-11	s	CERAMIC, CHIP 0.1uF 10% 25V
C805	1-164-004-11	s	CERAMIC, CHIP 0.1uF 10% 25V
C807	1-164-004-11	s	CERAMIC, CHIP 0.1uF 10% 25V
C808	1-164-004-11	s	CERAMIC, CHIP 0.1uF 10% 25V
C809	1-164-004-11	s	CERAMIC, CHIP 0.1uF 10% 25V
C810	1-164-004-11	s	CERAMIC, CHIP 0.1uF 10% 25V
C811	1-126-157-11	s	ELECT 10uF 20% 16V
C812	1-126-157-11	s	ELECT 10uF 20% 16V
C813	1-164-004-11	s	CERAMIC, CHIP 0.1uF 10% 25V
C814	1-126-157-11	s	ELECT 10uF 20% 16V
C815	1-164-004-11	s	CERAMIC, CHIP 0.1uF 10% 25V
C816	1-164-004-11	s	CERAMIC, CHIP 0.1uF 10% 25V
C817	1-164-004-11	s	CERAMIC, CHIP 0.1uF 10% 25V
C818	1-164-004-11	s	CERAMIC, CHIP 0.1uF 10% 25V
C819	1-164-004-11	s	CERAMIC, CHIP 0.1uF 10% 25V
C820	1-164-004-11	s	CERAMIC, CHIP 0.1uF 10% 25V
C821	1-164-004-11	s	CERAMIC, CHIP 0.1uF 10% 25V
C822	1-164-004-11	s	CERAMIC, CHIP 0.1uF 10% 25V
C823	1-164-004-11	s	CERAMIC, CHIP 0.1uF 10% 25V
C824	1-164-004-11	s	CERAMIC, CHIP 0.1uF 10% 25V
C825	1-164-004-11	s	CERAMIC, CHIP 0.1uF 10% 25V
C826	1-164-004-11	s	CERAMIC, CHIP 0.1uF 10% 25V
C827	1-163-037-11	s	CERAMIC, CHIP 0.022uF 10% 25V
C828	1-163-037-11	s	CERAMIC, CHIP 0.022uF 10% 25V

(DIF-11P BOARD)

Ref. No. or Q'ty	Part No.	SP	Description
C829	1-163-037-11	s	CERAMIC, CHIP 0.022uF 10% 25V
C830	1-163-037-11	s	CERAMIC, CHIP 0.022uF 10% 25V
C833	1-163-037-11	s	CERAMIC, CHIP 0.022uF 10% 25V
C839	1-163-037-11	s	CERAMIC, CHIP 0.022uF 10% 25V
C840	1-163-037-11	s	CERAMIC, CHIP 0.022uF 10% 25V
C841	1-163-037-11	s	CERAMIC, CHIP 0.022uF 10% 25V
C900	1-163-037-11	s	CERAMIC, CHIP 0.022uF 10% 25V
C901	1-163-037-11	s	CERAMIC, CHIP 0.022uF 10% 25V
C902	1-124-144-00	s	ELECT 220uF 20% 16V
C903	1-163-037-11	s	CERAMIC, CHIP 0.022uF 10% 25V
C904	1-124-584-00	s	ELECT 100uF 20% 10V
C905	1-163-037-11	s	CERAMIC, CHIP 0.022uF 10% 25V
C906	1-124-584-00	s	ELECT 100uF 20% 10V
C907	1-163-037-11	s	CERAMIC, CHIP 0.022uF 10% 25V
C908	1-124-584-00	s	ELECT 100uF 20% 10V
C909	1-163-037-11	s	CERAMIC, CHIP 0.022uF 10% 25V
C910	1-124-584-00	s	ELECT 100uF 20% 10V
C911	1-163-037-11	s	CERAMIC, CHIP 0.022uF 10% 25V
C912	1-124-584-00	s	ELECT 100uF 20% 10V
C913	1-163-037-11	s	CERAMIC, CHIP 0.022uF 10% 25V
C914	1-124-584-00	s	ELECT 100uF 20% 10V
C915	1-163-037-11	s	CERAMIC, CHIP 0.022uF 10% 25V
C916	1-124-584-00	s	ELECT 100uF 20% 10V
C919	1-163-037-11	s	CERAMIC, CHIP 0.022uF 10% 25V
C920	1-124-584-00	s	ELECT 100uF 20% 10V
C921	1-163-037-11	s	CERAMIC, CHIP 0.022uF 10% 25V
C922	1-163-037-11	s	CERAMIC, CHIP 0.022uF 10% 25V
C923	1-124-144-00	s	ELECT 220uF 20% 16V
C999	1-126-233-11	s	ELECT 22uF 20% 50V
C1058	1-126-233-11	s	ELECT 22uF 20% 50V
CN31	1-566-343-11	o	CONNECTOR, 40P, MALE
CN32	1-566-343-11	o	CONNECTOR, 40P, MALE
CN101	1-569-170-11	o	CONNECTOR, COAXIAL, MALE
CN103	1-561-365-21	o	CONNECTOR, COAXIAL, MALE
CN104	1-569-170-11	o	CONNECTOR, COAXIAL, MALE
CN133	1-573-600-21	s	CONNECTOR, PHEC 100P, MALE
CN134	1-573-600-21	s	CONNECTOR, PHEC 100P, MALE
CN135	1-573-600-21	s	CONNECTOR, PHEC 100P, MALE
CN800	1-569-170-11	o	CONNECTOR, COAXIAL, MALE
CN801	1-569-170-11	o	CONNECTOR, COAXIAL, MALE
CN802	1-569-170-11	o	CONNECTOR, COAXIAL, MALE
CN803	1-569-170-11	o	CONNECTOR, COAXIAL, MALE
CN1006	1-526-653-21	s	SOCKET, IC (DP) 14P
CN1007	1-526-653-21	s	SOCKET, IC (DP) 14P
CN1008	1-526-653-21	s	SOCKET, IC (DP) 14P
CN1009	1-526-653-21	s	SOCKET, IC (DP) 14P
D101	8-719-911-19	s	DIODE 1SS119
D102	8-719-400-35	s	LED LN35BP, GRN
D104	8-719-812-31	s	LED TLR123, RED
D105	8-719-812-31	s	LED TLR123, RED
D106	8-719-812-31	s	LED TLR123, RED
D107	8-719-812-31	s	LED TLR123, RED
D108	8-719-812-31	s	LED TLR123, RED
D109	8-719-812-31	s	LED TLR123, RED
D110	8-719-812-31	s	LED TLR123, RED
D111	8-719-812-31	s	LED TLR123, RED
D400	8-719-400-18	s	DIODE MA152WK
D401	8-719-400-18	s	DIODE MA152WK

(DIF-11P BOARD)

Ref. No. or Q'ty	Part No.	SP	Description
D402	8-719-400-18	s	DIODE MA152WK
D403	8-719-400-18	s	DIODE MA152WK
D600	8-719-400-18	s	DIODE MA152WK
D601	8-719-400-18	s	DIODE MA152WK
D602	8-719-941-04	s	DIODE SB007-03CP
D603	8-719-941-04	s	DIODE SB007-03CP
D604	8-719-941-04	s	DIODE SB007-03CP
D605	8-719-941-04	s	DIODE SB007-03CP
D606	8-719-400-18	s	DIODE MA152WK
D607	8-719-400-18	s	DIODE MA152WK
D608	8-719-941-04	s	DIODE SB007-03CP
D609	8-719-941-04	s	DIODE SB007-03CP
D610	8-719-941-04	s	DIODE SB007-03CP
D611	8-719-941-04	s	DIODE SB007-03CP
D612	8-719-400-18	s	DIODE MA152WK
D800	8-719-400-35	s	LED LN35BP, GRN
D801	8-719-911-19	s	DIODE 1SS119
FB102	1-535-180-00	s	BEAD, FERRITE
FB103	1-535-180-00	s	BEAD, FERRITE
FB104	1-535-180-00	s	BEAD, FERRITE
FB801	1-535-180-00	s	BEAD, FERRITE
FB802	1-535-180-00	s	BEAD, FERRITE
FB803	1-535-180-00	s	BEAD, FERRITE
FB804	1-535-180-00	s	BEAD, FERRITE
FL1	1-239-176-11	s	FILTER, LOW-PASS (NTSC)
FL100	1-239-134-11	s	FILTER, LOW-PASS
FL101	1-239-162-11	s	FILTER, LOW-PASS
FL102	1-239-166-11	s	FILTER, LOW-PASS
FL103	1-236-019-11	s	FILTER, LOW-PASS
FL104	1-236-021-11	s	FILTER, LOW-PASS
IC1	8-752-052-82	s	IC CXA1432M
IC2	8-752-052-73	s	IC CXA1451M
IC3	8-759-209-97	s	IC TC4S81F
IC4	8-759-234-20	s	IC TC7S08F
IC5	8-759-234-20	s	IC TC7S08F
IC6	8-759-982-44	s	IC RC79L05A
IC8	8-759-982-21	s	IC RC78L05A
IC9	8-759-982-21	s	IC RC78L05A
IC10	8-752-052-82	s	IC CXA1432M
IC11	8-752-054-80	s	IC CXA1521M
IC12	8-752-052-73	s	IC CXA1451M
IC13	8-752-052-82	s	IC CXA1432M
IC14	8-752-054-80	s	IC CXA1521M
IC15	8-752-052-73	s	IC CXA1451M
IC102	8-759-927-46	s	IC SN74HC00NS
IC104	8-741-602-11	s	IC SBX1602A
IC105	8-759-209-57	s	IC TC4S69F
IC106	8-759-012-13	s	IC MC10H125M
IC107	8-759-012-13	s	IC MC10H125M
IC108	8-759-012-13	s	IC MC10H125M
IC110	8-759-992-91	s	IC 74F280SJ
IC111	8-759-948-02	s	IC 74F86SJ
IC113	8-759-983-64	s	IC 74F10SJ
IC118	8-759-989-62	s	IC SN74ALS564ANS
IC120	8-759-239-64	s	IC TC74HC590AF
IC121	8-759-150-98	s	IC CXD8069Q
IC123	8-759-925-76	s	IC SN74HC08NS

(DIF-11P BOARD)

Ref. No. or Q'ty	Part No.	SP	Description
IC124	8-759-925-76	s	IC SN74HC08NS
IC125	8-759-925-76	s	IC SN74HC08NS
IC126	8-759-925-76	s	IC SN74HC08NS
IC127	8-759-925-76	s	IC SN74HC08NS
IC128	8-759-925-76	s	IC SN74HC08NS
IC129	8-759-925-85	s	IC SN74HC32NS
IC131	8-759-748-87	s	IC KPM5032DC
IC132	8-752-329-28	s	IC CXD1151Q
IC133	8-759-421-09	s	IC MN6557AS
IC135	1-809-333-11	s	IC H8D7151
IC136	8-759-929-26	s	IC TL431CPS
IC137	8-759-421-09	s	IC MN6557AS
IC139	1-809-333-11	s	IC H8D7151
IC140	8-759-929-26	s	IC TL431CPS
IC141	8-759-926-05	s	IC SN74HC125ANS
IC142	8-759-907-61	s	IC SN74LS221NS
IC143	8-759-907-61	s	IC SN74LS221NS
IC144	8-759-300-71	s	IC HD14053BFP
IC147	8-759-925-76	s	IC SN74HC08NS
IC148	8-759-982-44	s	IC RC79L05A
IC149	8-759-982-44	s	IC RC79L05A
IC150	8-759-982-21	s	IC RC78L05A
IC151	8-759-209-57	s	IC TC4S69F
IC400	8-759-926-18	s	IC SN74HC157NS
IC401	8-759-999-32	s	IC SM5813APT
IC402	8-759-982-04	s	IC RC5532M
IC403	8-759-982-04	s	IC RC5532M
IC404	8-759-982-04	s	IC RC5532M
IC405	8-759-982-21	s	IC RC78L05A
IC406	8-759-982-21	s	IC RC78L05A
IC407	8-759-504-27	s	IC PCM61P-K
IC409	8-759-982-44	s	IC RC79L05A
IC410	8-759-982-44	s	IC RC79L05A
IC411	8-759-982-04	s	IC RC5532M
IC412	8-759-982-04	s	IC RC5532M
IC413	8-759-982-04	s	IC RC5532M
IC414	8-759-982-21	s	IC RC78L05A
IC415	8-759-982-21	s	IC RC78L05A
IC416	8-759-504-27	s	IC PCM61P-K
IC418	8-759-982-44	s	IC RC79L05A
IC419	8-759-982-44	s	IC RC79L05A
IC420	8-759-926-18	s	IC SN74HC157NS
IC421	8-759-999-32	s	IC SM5813APT
IC422	8-759-982-04	s	IC RC5532M
IC423	8-759-982-04	s	IC RC5532M
IC424	8-759-982-04	s	IC RC5532M
IC425	8-759-982-21	s	IC RC78L05A
IC426	8-759-982-21	s	IC RC78L05A
IC427	8-759-504-27	s	IC PCM61P-K
IC429	8-759-982-44	s	IC RC79L05A
IC430	8-759-982-44	s	IC RC79L05A
IC431	8-759-982-04	s	IC RC5532M
IC432	8-759-982-04	s	IC RC5532M
IC433	8-759-982-04	s	IC RC5532M
IC434	8-759-982-21	s	IC RC78L05A
IC435	8-759-982-21	s	IC RC78L05A
IC436	8-759-504-27	s	IC PCM61P-K
IC438	8-759-982-44	s	IC RC79L05A
IC439	8-759-982-44	s	IC RC79L05A

(DIF-11P BOARD)

Ref. No. or Q'ty	Part No.	SP	Description
IC440	8-759-209-97	S	IC TC4S81F
IC441	8-759-209-97	S	IC TC4S81F
IC600	8-759-982-04	S	IC RC5532M
IC601	8-759-982-04	S	IC RC5532M
IC603	8-759-982-21	S	IC RC78L05A
IC604	8-759-982-04	S	IC RC5532M
IC605	8-759-982-04	S	IC RC5532M
IC606	8-759-982-44	S	IC RC79L05A
IC607	8-759-999-09	S	CS5326-KP
IC608	8-759-925-90	S	IC SN74HC74NS
IC609	8-759-925-90	S	IC SN74HC74NS
IC610	8-759-982-04	S	IC RC5532M
IC611	8-759-982-04	S	IC RC5532M
IC613	8-759-982-21	S	IC RC78L05A
IC614	8-759-982-04	S	IC RC5532M
IC615	8-759-982-04	S	IC RC5532M
IC616	8-759-982-44	S	IC RC79L05A
IC617	8-759-999-09	S	CS5326-KP
IC619	8-759-925-90	S	IC SN74HC74NS
IC620	8-759-925-74	S	IC SN74HC04NS
IC622	8-759-239-64	S	IC TC74HC590AF
IC623	8-759-925-90	S	IC SN74HC74NS
IC624	8-759-925-90	S	IC SN74HC74NS
IC627	8-759-245-04	S	IC TC4S584F
IC800	8-759-150-97	S	IC CXD8068G
IC801	8-741-601-11	S	IC SBX1601A
IC802	8-752-050-69	S	IC CXA1389AQ
IC804	8-759-992-34	S	IC 74F161ASJ
IC805	8-759-992-91	S	IC 74F280SJ
IC806	8-759-982-91	S	IC 74F157ASJ
IC807	8-759-926-82	S	IC SN74HC574ANS
IC808	8-759-926-82	S	IC SN74HC574ANS
IC809	8-759-012-02	S	IC MC10H124M
IC810	8-759-012-02	S	IC MC10H124M
IC811	8-759-012-02	S	IC MC10H124M
IC812	8-759-926-82	S	IC SN74HC574ANS
IC813	8-759-946-01	S	IC 74F045J
IC900	8-759-982-21	S	IC RC78L05A
IC902	8-759-982-44	S	IC RC79L05A
L1	1-410-482-31	S	INDUCTOR 100uH
L2	1-410-482-31	S	INDUCTOR 100uH
L3	1-410-482-31	S	INDUCTOR 100uH
L4	1-410-482-31	S	INDUCTOR 100uH
L5	1-410-482-31	S	INDUCTOR 100uH
L6	1-410-482-31	S	INDUCTOR 100uH
L103	1-408-425-00	S	INDUCTOR 220uH
L800	1-410-184-51	S	INDUCTOR CHIP 0.22uH
L900	1-412-533-11	S	INDUCTOR 47uH
L901	1-412-533-11	S	INDUCTOR 47uH
L902	1-421-370-00	S	COIL, CHOKE
L903	1-421-370-00	S	COIL, CHOKE
L904	1-412-533-11	S	INDUCTOR 47uH
Q1	8-729-904-41	S	TRANSISTOR FMY3
Q2	8-729-143-14	S	TRANSISTOR 2SC4176-B35
Q3	8-729-140-63	S	TRANSISTOR 2SA1611-M5M6
Q4	8-729-117-32	S	TRANSISTOR 2SC4177
Q5	8-729-140-63	S	TRANSISTOR 2SA1611-M5M6
Q6	8-729-117-32	S	TRANSISTOR 2SC4177

(DIF-11P BOARD)

Ref. No. or Q'ty	Part No.	SP	Description
Q7	8-729-904-41	S	TRANSISTOR FMY3
Q102	8-729-105-68	S	TRANSISTOR 2SC3356-K
Q103	8-729-105-68	S	TRANSISTOR 2SC3356-K
Q104	8-729-117-32	S	TRANSISTOR 2SC4177
Q105	8-729-100-66	S	TRANSISTOR 2SC1623
Q106	8-729-117-32	S	TRANSISTOR 2SC4177
Q107	8-729-117-32	S	TRANSISTOR 2SC4177
Q108	8-729-117-32	S	TRANSISTOR 2SC4177
Q109	8-729-106-68	S	TRANSISTOR 2SD1615A-GP
Q110	8-729-117-32	S	TRANSISTOR 2SC4177
Q111	8-729-117-32	S	TRANSISTOR 2SC4177
Q112	8-729-117-32	S	TRANSISTOR 2SC4177
Q113	8-729-106-68	S	TRANSISTOR 2SD1615A-GP
Q114	8-729-117-32	S	TRANSISTOR 2SC4177
Q115	8-729-117-32	S	TRANSISTOR 2SC4177
Q116	8-729-117-32	S	TRANSISTOR 2SC4177
Q117	8-729-117-32	S	TRANSISTOR 2SC4177
Q118	8-729-117-32	S	TRANSISTOR 2SC4177
Q119	8-729-117-32	S	TRANSISTOR 2SC4177
Q121	8-729-901-01	S	TRANSISTOR DTC144EK
Q122	8-765-420-01	S	TRANSISTOR 2SK300-2
Q123	8-765-420-01	S	TRANSISTOR 2SK300-2
Q124	8-765-420-01	S	TRANSISTOR 2SK300-2
Q400	8-729-900-80	S	TRANSISTOR DTC114ES
Q401	8-729-100-66	S	TRANSISTOR 2SC1623
Q402	8-729-216-22	S	TRANSISTOR 2SA1162
Q403	8-729-900-80	S	TRANSISTOR DTC114ES
Q404	8-729-100-66	S	TRANSISTOR 2SC1623
Q405	8-729-216-22	S	TRANSISTOR 2SA1162
Q406	8-729-900-80	S	TRANSISTOR DTC114ES
Q407	8-729-100-66	S	TRANSISTOR 2SC1623
Q408	8-729-216-22	S	TRANSISTOR 2SA1162
Q409	8-729-900-80	S	TRANSISTOR DTC114ES
Q410	8-729-100-66	S	TRANSISTOR 2SC1623
Q411	8-729-216-22	S	TRANSISTOR 2SA1162
Q600	8-729-216-22	S	TRANSISTOR 2SA1162
Q601	8-729-100-66	S	TRANSISTOR 2SC1623
Q602	8-729-100-66	S	TRANSISTOR 2SC1623
Q603	8-729-216-22	S	TRANSISTOR 2SA1162
Q604	8-729-216-22	S	TRANSISTOR 2SA1162
Q605	8-729-100-66	S	TRANSISTOR 2SC1623
Q606	8-729-100-66	S	TRANSISTOR 2SC1623
Q607	8-729-900-53	S	TRANSISTOR DTC114EK
Q608	8-729-900-53	S	TRANSISTOR DTC114EK
Q609	8-729-216-22	S	TRANSISTOR 2SA1162
Q800	8-729-901-01	S	TRANSISTOR DTC144EK
Q801	8-729-100-66	S	TRANSISTOR 2SC1623
Q802	8-729-140-63	S	TRANSISTOR 2SA1611-M5M6
Q803	8-729-140-63	S	TRANSISTOR 2SA1611-M5M6
R1	1-216-638-11	S	METAL, CHIP 300 0.5% 1/10W
R2	1-216-073-00	S	METAL, CHIP 10K 5% 1/10W
R3	1-216-643-11	S	METAL, CHIP 470 0.5% 1/10W
R4	1-216-659-11	S	METAL, CHIP 2.2K 0.5% 1/10W
R5	1-216-659-11	S	METAL, CHIP 2.2K 0.5% 1/10W
R6	1-216-643-11	S	METAL, CHIP 470 0.5% 1/10W
R8	1-216-009-00	S	METAL, CHIP 22 5% 1/10W
R9	1-216-624-11	S	METAL, CHIP 75 0.5% 1/10W
R10	1-216-089-00	S	METAL, CHIP 47K 5% 1/10W
R11	1-216-089-00	S	METAL, CHIP 47K 5% 1/10W

(DIF-11P BOARD)

Ref. No. or Q'ty	Part No.	SP	Description
R12	1-216-049-00	s	METAL, CHIP 1K 5% 1/10W
R13	1-216-065-00	s	METAL, CHIP 4.7K 5% 1/10W
R14	1-216-065-00	s	METAL, CHIP 4.7K 5% 1/10W
R15	1-216-651-11	s	METAL, CHIP 1K 0.5% 1/10W
R16	1-216-651-11	s	METAL, CHIP 1K 0.5% 1/10W
R17	1-216-683-11	s	METAL, CHIP 22K 0.5% 1/10W
R18	1-216-683-11	s	METAL, CHIP 22K 0.5% 1/10W
R19	1-216-683-11	s	METAL, CHIP 22K 0.5% 1/10W
R20	1-216-651-11	s	METAL, CHIP 1K 0.5% 1/10W
R21	1-216-635-11	s	METAL, CHIP 220 0.5% 1/10W
R22	1-216-651-11	s	METAL, CHIP 1K 0.5% 1/10W
R23	1-216-683-11	s	METAL, CHIP 22K 0.5% 1/10W
R24	1-216-627-11	s	METAL, CHIP 100 0.5% 1/10W
R25	1-216-651-11	s	METAL, CHIP 1K 0.5% 1/10W
R26	1-216-089-00	s	METAL, CHIP 47K 5% 1/10W
R27	1-216-089-00	s	METAL, CHIP 47K 5% 1/10W
R28	1-216-055-00	s	METAL, CHIP 1.8K 5% 1/10W
R29	1-216-049-00	s	METAL, CHIP 1K 5% 1/10W
R30	1-216-844-11	s	METAL, CHIP 510 0.5% 1/10W
R31	1-216-841-11	s	METAL, CHIP 390 0.5% 1/10W
R32	1-216-631-11	s	METAL, CHIP 150 0.5% 1/10W
R33	1-216-659-11	s	METAL, CHIP 2.2K 0.5% 1/10W
R34	1-216-659-11	s	METAL, CHIP 2.2K 0.5% 1/10W
R35	1-216-295-00	s	METAL, CHIP 0-OHM
R40	1-216-638-11	s	METAL, CHIP 300 0.5% 1/10W
R41	1-216-669-11	s	METAL, CHIP 5.6K 0.5% 1/10W
R42	1-216-669-11	s	METAL, CHIP 5.6K 0.5% 1/10W
R43	1-216-073-00	s	METAL, CHIP 10K 5% 1/10W
R44	1-216-009-00	s	METAL, CHIP 22 5% 1/10W
R45	1-216-624-11	s	METAL, CHIP 75 0.5% 1/10W
R46	1-216-295-00	s	METAL, CHIP 0-OHM
R50	1-216-638-11	s	METAL, CHIP 300 0.5% 1/10W
R51	1-216-669-11	s	METAL, CHIP 5.6K 0.5% 1/10W
R52	1-216-669-11	s	METAL, CHIP 5.6K 0.5% 1/10W
R53	1-216-073-00	s	METAL, CHIP 10K 5% 1/10W
R54	1-216-009-00	s	METAL, CHIP 22 5% 1/10W
R55	1-216-624-11	s	METAL, CHIP 75 0.5% 1/10W
R56	1-216-295-00	s	METAL, CHIP 0-OHM
R81	1-216-295-00	s	METAL, CHIP 0-OHM
R104	1-216-624-11	s	METAL, CHIP 75 0.5% 1/10W
R105	1-216-699-11	s	METAL, CHIP 100K 0.5% 1/10W
R106	1-216-675-11	s	METAL, CHIP 10K 0.5% 1/10W
R107	1-216-675-11	s	METAL, CHIP 10K 0.5% 1/10W
R109	1-216-651-11	s	METAL, CHIP 1K 0.5% 1/10W
R110	1-216-675-11	s	METAL, CHIP 10K 0.5% 1/10W
R111	1-216-651-11	s	METAL, CHIP 1K 0.5% 1/10W
R113	1-216-627-11	s	METAL, CHIP 100 0.5% 1/10W
R114	1-216-651-11	s	METAL, CHIP 1K 0.5% 1/10W
R115	1-216-651-11	s	METAL, CHIP 1K 0.5% 1/10W
R119	1-216-615-11	s	METAL, CHIP 33 0.5% 1/10W
R120	1-216-615-11	s	METAL, CHIP 33 0.5% 1/10W
R121	1-216-675-11	s	METAL, CHIP 10K 0.5% 1/10W
R122	1-216-625-11	s	METAL, CHIP 82 0.5% 1/10W
R123	1-216-675-11	s	METAL, CHIP 10K 0.5% 1/10W
R124	1-216-635-11	s	METAL, CHIP 220 0.5% 1/10W
R125	1-216-635-11	s	METAL, CHIP 220 0.5% 1/10W
R126	1-216-675-11	s	METAL, CHIP 10K 0.5% 1/10W
R127	1-216-631-11	s	METAL, CHIP 150 0.5% 1/10W
R128	1-216-661-11	s	METAL, CHIP 2.7K 0.5% 1/10W

(DIF-11P BOARD)

Ref. No. or Q'ty	Part No.	SP	Description
R131	1-216-859-11	s	METAL, CHIP 2.2K 0.5% 1/10W
R132	1-216-624-11	s	METAL, CHIP 75 0.5% 1/10W
R133	1-216-624-11	s	METAL, CHIP 75 0.5% 1/10W
R134	1-216-664-11	s	METAL, CHIP 3.6K 0.5% 1/10W
R135	1-216-675-11	s	METAL, CHIP 10K 0.5% 1/10W
R138	1-216-681-11	s	METAL, CHIP 18K 0.5% 1/10W
R139	1-216-675-11	s	METAL, CHIP 10K 0.5% 1/10W
R140	1-216-627-11	s	METAL, CHIP 100 0.5% 1/10W
R141	1-216-645-11	s	METAL, CHIP 560 0.5% 1/10W
R142	1-216-645-11	s	METAL, CHIP 560 0.5% 1/10W
R143	1-216-645-11	s	METAL, CHIP 560 0.5% 1/10W
R144	1-216-631-11	s	METAL, CHIP 150 0.5% 1/10W
R145	1-216-645-11	s	METAL, CHIP 560 0.5% 1/10W
R146	1-216-645-11	s	METAL, CHIP 560 0.5% 1/10W
R147	1-216-645-11	s	METAL, CHIP 560 0.5% 1/10W
R148	1-216-655-11	s	METAL, CHIP 1.5K 0.5% 1/10W
R149	1-216-645-11	s	METAL, CHIP 560 0.5% 1/10W
R150	1-216-659-11	s	METAL, CHIP 2.2K 0.5% 1/10W
R151	1-216-645-11	s	METAL, CHIP 560 0.5% 1/10W
R152	1-216-645-11	s	METAL, CHIP 560 0.5% 1/10W
R153	1-216-645-11	s	METAL, CHIP 560 0.5% 1/10W
R154	1-216-661-11	s	METAL, CHIP 2.7K 0.5% 1/10W
R156	1-216-673-11	s	METAL, CHIP 8.2K 0.5% 1/10W
R157	1-216-645-11	s	METAL, CHIP 560 0.5% 1/10W
R158	1-216-639-11	s	METAL, CHIP 330 0.5% 1/10W
R159	1-216-675-11	s	METAL, CHIP 10K 0.5% 1/10W
R160	1-216-295-00	s	METAL, CHIP 0-OHM
R161	1-216-651-11	s	METAL, CHIP 1K 0.5% 1/10W
R162	1-216-655-11	s	METAL, CHIP 1.5K 0.5% 1/10W
R163	1-216-661-11	s	METAL, CHIP 2.7K 0.5% 1/10W
R164	1-216-639-11	s	METAL, CHIP 330 0.5% 1/10W
R165	1-216-639-11	s	METAL, CHIP 330 0.5% 1/10W
R166	1-216-663-11	s	METAL, CHIP 3.3K 0.5% 1/10W
R167	1-216-657-11	s	METAL, CHIP 1.8K 0.5% 1/10W
R168	1-216-651-11	s	METAL, CHIP 1K 0.5% 1/10W
R169	1-216-641-11	s	METAL, CHIP 390 0.5% 1/10W
R170	1-216-619-11	s	METAL, CHIP 47 0.5% 1/10W
R175	1-216-660-11	s	METAL, CHIP 2.4K 0.5% 1/10W
R176	1-216-651-11	s	METAL, CHIP 1K 0.5% 1/10W
R177	1-216-643-11	s	METAL, CHIP 470 0.5% 1/10W
R178	1-216-651-11	s	METAL, CHIP 1K 0.5% 1/10W
R179	1-216-295-00	s	METAL, CHIP 0-OHM
R180	1-216-620-11	s	METAL, CHIP 51 0.5% 1/10W
R181	1-216-639-11	s	METAL, CHIP 330 0.5% 1/10W
R182	1-216-675-11	s	METAL, CHIP 10K 0.5% 1/10W
R183	1-216-675-11	s	METAL, CHIP 10K 0.5% 1/10W
R184	1-216-619-11	s	METAL, CHIP 47 0.5% 1/10W
R185	1-216-643-11	s	METAL, CHIP 470 0.5% 1/10W
R186	1-216-651-11	s	METAL, CHIP 1K 0.5% 1/10W
R187	1-216-655-11	s	METAL, CHIP 1.5K 0.5% 1/10W
R188	1-216-661-11	s	METAL, CHIP 2.7K 0.5% 1/10W
R189	1-216-639-11	s	METAL, CHIP 330 0.5% 1/10W
R190	1-216-639-11	s	METAL, CHIP 330 0.5% 1/10W
R191	1-216-663-11	s	METAL, CHIP 3.3K 0.5% 1/10W
R192	1-216-657-11	s	METAL, CHIP 1.8K 0.5% 1/10W
R193	1-216-651-11	s	METAL, CHIP 1K 0.5% 1/10W
R194	1-216-639-11	s	METAL, CHIP 330 0.5% 1/10W
R195	1-216-619-11	s	METAL, CHIP 47 0.5% 1/10W
R200	1-216-657-11	s	METAL, CHIP 1.8K 0.5% 1/10W

(DIF-11P BOARD)

Ref. No. or Q'ty	Part No.	SP	Description
R201	1-216-643-11	S	METAL, CHIP 470 0.5% 1/10W
R202	1-216-651-11	S	METAL, CHIP 1K 0.5% 1/10W
R203	1-216-295-00	S	METAL, CHIP 0-OHM
R204	1-216-620-11	S	METAL, CHIP 51 0.5% 1/10W
R205	1-216-639-11	S	METAL, CHIP 330 0.5% 1/10W
R206	1-216-675-11	S	METAL, CHIP 10K 0.5% 1/10W
R207	1-216-675-11	S	METAL, CHIP 10K 0.5% 1/10W
R208	1-216-619-11	S	METAL, CHIP 47 0.5% 1/10W
R209	1-216-643-11	S	METAL, CHIP 470 0.5% 1/10W
R210	1-216-662-11	S	METAL, CHIP 3K 0.5% 1/10W
R211	1-216-651-11	S	METAL, CHIP 1K 0.5% 1/10W
R212	1-216-644-11	S	METAL, CHIP 510 0.5% 1/10W
R213	1-216-651-11	S	METAL, CHIP 1K 0.5% 1/10W
R214	1-216-644-11	S	METAL, CHIP 510 0.5% 1/10W
R215	1-216-659-11	S	METAL, CHIP 2.2K 0.5% 1/10W
R216	1-216-675-11	S	METAL, CHIP 10K 0.5% 1/10W
R217	1-216-677-11	S	METAL, CHIP 12K 0.5% 1/10W
R218	1-216-687-11	S	METAL, CHIP 33K 0.5% 1/10W
R219	1-216-662-11	S	METAL, CHIP 3K 0.5% 1/10W
R220	1-216-651-11	S	METAL, CHIP 1K 0.5% 1/10W
R221	1-216-651-11	S	METAL, CHIP 1K 0.5% 1/10W
R222	1-216-659-11	S	METAL, CHIP 2.2K 0.5% 1/10W
R223	1-216-651-11	S	METAL, CHIP 1K 0.5% 1/10W
R224	1-216-659-11	S	METAL, CHIP 2.2K 0.5% 1/10W
R225	1-216-669-11	S	METAL, CHIP 5.6K 0.5% 1/10W
R226	1-216-295-00	S	METAL, CHIP 0-OHM
R228	1-216-685-11	S	METAL, CHIP 27K 0.5% 1/10W
R229	1-216-662-11	S	METAL, CHIP 3K 0.5% 1/10W
R230	1-216-651-11	S	METAL, CHIP 1K 0.5% 1/10W
R231	1-216-651-11	S	METAL, CHIP 1K 0.5% 1/10W
R232	1-216-659-11	S	METAL, CHIP 2.2K 0.5% 1/10W
R233	1-216-651-11	S	METAL, CHIP 1K 0.5% 1/10W
R234	1-216-659-11	S	METAL, CHIP 2.2K 0.5% 1/10W
R239	1-216-651-11	S	METAL, CHIP 1K 0.5% 1/10W
R240	1-216-651-11	S	METAL, CHIP 1K 0.5% 1/10W
R241	1-216-651-11	S	METAL, CHIP 1K 0.5% 1/10W
R249	1-216-295-00	S	METAL, CHIP 0-OHM
R251	1-216-017-00	S	METAL, CHIP 47 5% 1/10W
R252	1-216-029-00	S	METAL, CHIP 150 5% 1/10W
R253	1-216-029-00	S	METAL, CHIP 150 5% 1/10W
R254	1-216-029-00	S	METAL, CHIP 150 5% 1/10W
R255	1-216-029-00	S	METAL, CHIP 150 5% 1/10W
R256	1-216-029-00	S	METAL, CHIP 150 5% 1/10W
R257	1-216-029-00	S	METAL, CHIP 150 5% 1/10W
R258	1-216-029-00	S	METAL, CHIP 150 5% 1/10W
R259	1-216-029-00	S	METAL, CHIP 150 5% 1/10W
R260	1-216-029-00	S	METAL, CHIP 150 5% 1/10W
R261	1-216-029-00	S	METAL, CHIP 150 5% 1/10W
R262	1-216-017-00	S	METAL, CHIP 47 5% 1/10W
R263	1-216-017-00	S	METAL, CHIP 47 5% 1/10W
R264	1-216-017-00	S	METAL, CHIP 47 5% 1/10W
R265	1-216-017-00	S	METAL, CHIP 47 5% 1/10W
R266	1-216-017-00	S	METAL, CHIP 47 5% 1/10W
R267	1-216-017-00	S	METAL, CHIP 47 5% 1/10W
R268	1-216-017-00	S	METAL, CHIP 47 5% 1/10W
R269	1-216-017-00	S	METAL, CHIP 47 5% 1/10W
R270	1-216-017-00	S	METAL, CHIP 47 5% 1/10W
R271	1-216-017-00	S	METAL, CHIP 47 5% 1/10W
R272	1-216-017-00	S	METAL, CHIP 47 5% 1/10W

(DIF-11P BOARD)

Ref. No. or Q'ty	Part No.	SP	Description
R273	1-216-643-11	S	METAL, CHIP 470 0.5% 1/10W
R274	1-216-643-11	S	METAL, CHIP 470 0.5% 1/10W
R275	1-216-643-11	S	METAL, CHIP 470 0.5% 1/10W
R276	1-216-643-11	S	METAL, CHIP 470 0.5% 1/10W
R277	1-216-643-11	S	METAL, CHIP 470 0.5% 1/10W
R278	1-216-643-11	S	METAL, CHIP 470 0.5% 1/10W
R279	1-216-643-11	S	METAL, CHIP 470 0.5% 1/10W
R280	1-216-643-11	S	METAL, CHIP 470 0.5% 1/10W
R281	1-216-651-11	S	METAL, CHIP 1K 0.5% 1/10W
R282	1-216-624-11	S	METAL, CHIP 75 0.5% 1/10W
R283	1-216-624-11	S	METAL, CHIP 75 0.5% 1/10W
R284	1-216-699-11	S	METAL, CHIP 100K 0.5% 1/10W
R285	1-216-699-11	S	METAL, CHIP 100K 0.5% 1/10W
R286	1-216-699-11	S	METAL, CHIP 100K 0.5% 1/10W
R400	1-216-619-11	S	METAL, CHIP 47 0.5% 1/10W
R401	1-216-645-11	S	METAL, CHIP 560 0.5% 1/10W
R402	1-216-121-00	S	METAL, CHIP 1M 5% 1/10W
R403	1-216-656-11	S	METAL, CHIP 1.6K 0.5% 1/10W
R404	1-216-656-11	S	METAL, CHIP 1.6K 0.5% 1/10W
R405	1-216-656-11	S	METAL, CHIP 1.6K 0.5% 1/10W
R406	1-216-656-11	S	METAL, CHIP 1.6K 0.5% 1/10W
R407	1-216-663-11	S	METAL, CHIP 3.3K 0.5% 1/10W
R408	1-216-679-11	S	METAL, CHIP 15K 0.5% 1/10W
R409	1-216-295-00	S	METAL, CHIP 0-OHM
R410	1-216-675-11	S	METAL, CHIP 10K 0.5% 1/10W
R411	1-216-675-11	S	METAL, CHIP 10K 0.5% 1/10W
R412	1-216-691-11	S	METAL, CHIP 47K 0.5% 1/10W
R413	1-216-647-11	S	METAL, CHIP 680 0.5% 1/10W
R416	1-216-650-11	S	METAL, CHIP 910 0.5% 1/10W
R417	1-216-113-00	S	METAL, CHIP 470K 5% 1/10W
R418	1-216-105-00	S	METAL, CHIP 220K 5% 1/10W
R419	1-216-121-00	S	METAL, CHIP 1M 5% 1/10W
R422	1-216-647-11	S	METAL, CHIP 680 0.5% 1/10W
R423	1-216-619-11	S	METAL, CHIP 47 0.5% 1/10W
R424	1-216-645-11	S	METAL, CHIP 560 0.5% 1/10W
R425	1-216-121-00	S	METAL, CHIP 1M 5% 1/10W
R426	1-216-656-11	S	METAL, CHIP 1.6K 0.5% 1/10W
R427	1-216-656-11	S	METAL, CHIP 1.6K 0.5% 1/10W
R428	1-216-656-11	S	METAL, CHIP 1.6K 0.5% 1/10W
R429	1-216-656-11	S	METAL, CHIP 1.6K 0.5% 1/10W
R430	1-216-663-11	S	METAL, CHIP 3.3K 0.5% 1/10W
R431	1-216-679-11	S	METAL, CHIP 15K 0.5% 1/10W
R432	1-216-295-00	S	METAL, CHIP 0-OHM
R433	1-216-675-11	S	METAL, CHIP 10K 0.5% 1/10W
R434	1-216-675-11	S	METAL, CHIP 10K 0.5% 1/10W
R435	1-216-691-11	S	METAL, CHIP 47K 0.5% 1/10W
R436	1-216-647-11	S	METAL, CHIP 680 0.5% 1/10W
R439	1-216-650-11	S	METAL, CHIP 910 0.5% 1/10W
R440	1-216-113-00	S	METAL, CHIP 470K 5% 1/10W
R441	1-216-105-00	S	METAL, CHIP 220K 5% 1/10W
R442	1-216-121-00	S	METAL, CHIP 1M 5% 1/10W
R445	1-216-647-11	S	METAL, CHIP 680 0.5% 1/10W
R446	1-216-619-11	S	METAL, CHIP 47 0.5% 1/10W
R447	1-216-645-11	S	METAL, CHIP 560 0.5% 1/10W
R448	1-216-121-00	S	METAL, CHIP 1M 5% 1/10W
R449	1-216-656-11	S	METAL, CHIP 1.6K 0.5% 1/10W
R450	1-216-656-11	S	METAL, CHIP 1.6K 0.5% 1/10W
R451	1-216-656-11	S	METAL, CHIP 1.6K 0.5% 1/10W
R452	1-216-656-11	S	METAL, CHIP 1.6K 0.5% 1/10W

(DIF-11P BOARD)

Ref. No. or Q'ty	Part No.	SP	Description
R453	1-218-663-11	s	METAL, CHIP 3.3K 0.5% 1/10W
R454	1-218-679-11	s	METAL, CHIP 15K 0.5% 1/10W
R455	1-218-295-00	s	METAL, CHIP 0-OHM
R456	1-218-675-11	s	METAL, CHIP 10K 0.5% 1/10W
R457	1-218-675-11	s	METAL, CHIP 10K 0.5% 1/10W
R458	1-216-691-11	s	METAL, CHIP 47K 0.5% 1/10W
R459	1-218-647-11	s	METAL, CHIP 680 0.5% 1/10W
R462	1-218-650-11	s	METAL, CHIP 910 0.5% 1/10W
R463	1-218-113-00	s	METAL, CHIP 470K 5% 1/10W
R464	1-216-105-00	s	METAL, CHIP 220K 5% 1/10W
R465	1-218-121-00	s	METAL, CHIP 1M 5% 1/10W
R468	1-218-647-11	s	METAL, CHIP 680 0.5% 1/10W
R469	1-218-619-11	s	METAL, CHIP 47 0.5% 1/10W
R470	1-218-645-11	s	METAL, CHIP 560 0.5% 1/10W
R471	1-218-121-00	s	METAL, CHIP 1M 5% 1/10W
R472	1-216-656-11	s	METAL, CHIP 1.6K 0.5% 1/10W
R473	1-216-656-11	s	METAL, CHIP 1.6K 0.5% 1/10W
R474	1-216-656-11	s	METAL, CHIP 1.6K 0.5% 1/10W
R475	1-216-656-11	s	METAL, CHIP 1.6K 0.5% 1/10W
R476	1-216-663-11	s	METAL, CHIP 3.3K 0.5% 1/10W
R477	1-216-679-11	s	METAL, CHIP 15K 0.5% 1/10W
R478	1-218-295-00	s	METAL, CHIP 0-OHM
R479	1-218-675-11	s	METAL, CHIP 10K 0.5% 1/10W
R480	1-216-675-11	s	METAL, CHIP 10K 0.5% 1/10W
R481	1-216-691-11	s	METAL, CHIP 47K 0.5% 1/10W
R482	1-216-647-11	s	METAL, CHIP 680 0.5% 1/10W
R485	1-216-650-11	s	METAL, CHIP 910 0.5% 1/10W
R486	1-216-113-00	s	METAL, CHIP 470K 5% 1/10W
R487	1-216-105-00	s	METAL, CHIP 220K 5% 1/10W
R488	1-216-121-00	s	METAL, CHIP 1M 5% 1/10W
R491	1-216-647-11	s	METAL, CHIP 680 0.5% 1/10W
R492	1-216-691-11	s	METAL, CHIP 47K 0.5% 1/10W
R493	1-216-691-11	s	METAL, CHIP 47K 0.5% 1/10W
R494	1-216-691-11	s	METAL, CHIP 47K 0.5% 1/10W
R495	1-216-691-11	s	METAL, CHIP 47K 0.5% 1/10W
R600	1-216-647-11	s	METAL, CHIP 680 0.5% 1/10W
R601	1-218-619-11	s	METAL, CHIP 47 0.5% 1/10W
R602	1-216-659-11	s	METAL, CHIP 2.2K 0.5% 1/10W
R603	1-216-651-11	s	METAL, CHIP 1K 0.5% 1/10W
R604	1-216-121-00	s	METAL, CHIP 1M 5% 1/10W
R605	1-216-679-11	s	METAL, CHIP 15K 0.5% 1/10W
R606	1-216-679-11	s	METAL, CHIP 15K 0.5% 1/10W
R607	1-216-650-11	s	METAL, CHIP 910 0.5% 1/10W
R608	1-216-647-11	s	METAL, CHIP 680 0.5% 1/10W
R609	1-216-650-11	s	METAL, CHIP 910 0.5% 1/10W
R610	1-218-675-11	s	METAL, CHIP 10K 0.5% 1/10W
R611	1-216-627-11	s	METAL, CHIP 100 0.5% 1/10W
R612	1-216-651-11	s	METAL, CHIP 1K 0.5% 1/10W
R613	1-216-103-00	s	METAL, CHIP 180K 5% 1/10W
R614	1-216-691-11	s	METAL, CHIP 47K 0.5% 1/10W
R615	1-218-295-00	s	METAL, CHIP 0-OHM
R616	1-218-647-11	s	METAL, CHIP 680 0.5% 1/10W
R617	1-218-619-11	s	METAL, CHIP 47 0.5% 1/10W
R618	1-218-659-11	s	METAL, CHIP 2.2K 0.5% 1/10W
R619	1-216-651-11	s	METAL, CHIP 1K 0.5% 1/10W
R620	1-216-121-00	s	METAL, CHIP 1M 5% 1/10W
R621	1-216-679-11	s	METAL, CHIP 15K 0.5% 1/10W
R622	1-216-679-11	s	METAL, CHIP 15K 0.5% 1/10W
R623	1-216-650-11	s	METAL, CHIP 910 0.5% 1/10W

(DIF-11P BOARD)

Ref. No. or Q'ty	Part No.	SP	Description
R624	1-218-647-11	s	METAL, CHIP 680 0.5% 1/10W
R625	1-218-650-11	s	METAL, CHIP 910 0.5% 1/10W
R626	1-216-675-11	s	METAL, CHIP 10K 0.5% 1/10W
R627	1-216-651-11	s	METAL, CHIP 1K 0.5% 1/10W
R628	1-216-103-00	s	METAL, CHIP 180K 5% 1/10W
R629	1-216-627-11	s	METAL, CHIP 100 0.5% 1/10W
R630	1-216-691-11	s	METAL, CHIP 47K 0.5% 1/10W
R631	1-218-295-00	s	METAL, CHIP 0-OHM
R632	1-216-620-11	s	METAL, CHIP 51 0.5% 1/10W
R633	1-216-620-11	s	METAL, CHIP 51 0.5% 1/10W
R634	1-216-620-11	s	METAL, CHIP 51 0.5% 1/10W
R635	1-216-620-11	s	METAL, CHIP 51 0.5% 1/10W
R636	1-216-620-11	s	METAL, CHIP 51 0.5% 1/10W
R637	1-218-699-11	s	METAL, CHIP 100K 0.5% 1/10W
R638	1-218-699-11	s	METAL, CHIP 100K 0.5% 1/10W
R639	1-216-647-11	s	METAL, CHIP 680 0.5% 1/10W
R640	1-216-619-11	s	METAL, CHIP 47 0.5% 1/10W
R641	1-216-659-11	s	METAL, CHIP 2.2K 0.5% 1/10W
R642	1-216-651-11	s	METAL, CHIP 1K 0.5% 1/10W
R643	1-216-121-00	s	METAL, CHIP 1M 5% 1/10W
R644	1-216-679-11	s	METAL, CHIP 15K 0.5% 1/10W
R645	1-216-679-11	s	METAL, CHIP 15K 0.5% 1/10W
R646	1-216-650-11	s	METAL, CHIP 910 0.5% 1/10W
R647	1-216-647-11	s	METAL, CHIP 680 0.5% 1/10W
R648	1-216-650-11	s	METAL, CHIP 910 0.5% 1/10W
R649	1-216-675-11	s	METAL, CHIP 10K 0.5% 1/10W
R650	1-216-627-11	s	METAL, CHIP 100 0.5% 1/10W
R651	1-216-651-11	s	METAL, CHIP 1K 0.5% 1/10W
R652	1-216-103-00	s	METAL, CHIP 180K 5% 1/10W
R653	1-216-691-11	s	METAL, CHIP 47K 0.5% 1/10W
R654	1-216-295-00	s	METAL, CHIP 0-OHM
R655	1-218-647-11	s	METAL, CHIP 680 0.5% 1/10W
R656	1-216-619-11	s	METAL, CHIP 47 0.5% 1/10W
R657	1-216-659-11	s	METAL, CHIP 2.2K 0.5% 1/10W
R658	1-216-651-11	s	METAL, CHIP 1K 0.5% 1/10W
R659	1-216-121-00	s	METAL, CHIP 1M 5% 1/10W
R661	1-216-679-11	s	METAL, CHIP 15K 0.5% 1/10W
R662	1-216-650-11	s	METAL, CHIP 910 0.5% 1/10W
R663	1-216-647-11	s	METAL, CHIP 680 0.5% 1/10W
R664	1-216-650-11	s	METAL, CHIP 910 0.5% 1/10W
R665	1-216-675-11	s	METAL, CHIP 10K 0.5% 1/10W
R666	1-216-651-11	s	METAL, CHIP 1K 0.5% 1/10W
R667	1-216-103-00	s	METAL, CHIP 180K 5% 1/10W
R668	1-216-627-11	s	METAL, CHIP 100 0.5% 1/10W
R669	1-216-691-11	s	METAL, CHIP 47K 0.5% 1/10W
R670	1-216-295-00	s	METAL, CHIP 0-OHM
R671	1-216-620-11	s	METAL, CHIP 51 0.5% 1/10W
R672	1-216-620-11	s	METAL, CHIP 51 0.5% 1/10W
R673	1-216-620-11	s	METAL, CHIP 51 0.5% 1/10W
R674	1-216-620-11	s	METAL, CHIP 51 0.5% 1/10W
R675	1-216-620-11	s	METAL, CHIP 51 0.5% 1/10W
R676	1-218-699-11	s	METAL, CHIP 100K 0.5% 1/10W
R677	1-216-698-11	s	METAL, CHIP 100K 0.5% 1/10W
R678	1-216-698-11	s	METAL, CHIP 100K 0.5% 1/10W
R679	1-216-675-11	s	METAL, CHIP 10K 0.5% 1/10W
R680	1-216-679-11	s	METAL, CHIP 15K 0.5% 1/10W
R685	1-249-407-11	s	CARBON 150 5% 1/4W
R800	1-216-295-00	s	METAL, CHIP 0-OHM
R801	1-216-683-11	s	METAL, CHIP 22K 0.5% 1/10W

(DIF-11P BOARD)

Ref. No. or Q'ty	Part No.	SP	Description
R802	1-216-651-11	s	METAL, CHIP 1K 0.5% 1/10W
R803	1-216-651-11	s	METAL, CHIP 1K 0.5% 1/10W
R804	1-216-651-11	s	METAL, CHIP 1K 0.5% 1/10W
R805	1-216-651-11	s	METAL, CHIP 1K 0.5% 1/10W
R806	1-216-647-11	s	METAL, CHIP 680 0.5% 1/10W
R807	1-216-675-11	s	METAL, CHIP 10K 0.5% 1/10W
R808	1-216-651-11	s	METAL, CHIP 1K 0.5% 1/10W
R809	1-216-625-11	s	METAL, CHIP 82 0.5% 1/10W
R810	1-216-611-11	s	METAL, CHIP 22 0.5% 1/10W
R811	1-216-611-11	s	METAL, CHIP 22 0.5% 1/10W
R812	1-216-651-11	s	METAL, CHIP 1K 0.5% 1/10W
R813	1-216-635-11	s	METAL, CHIP 220 0.5% 1/10W
R814	1-216-635-11	s	METAL, CHIP 220 0.5% 1/10W
R815	1-216-635-11	s	METAL, CHIP 220 0.5% 1/10W
R816	1-216-631-11	s	METAL, CHIP 150 0.5% 1/10W
R817	1-216-631-11	s	METAL, CHIP 150 0.5% 1/10W
R818	1-216-631-11	s	METAL, CHIP 150 0.5% 1/10W
R819	1-216-631-11	s	METAL, CHIP 150 0.5% 1/10W
R820	1-216-651-11	s	METAL, CHIP 1K 0.5% 1/10W
R821	1-216-651-11	s	METAL, CHIP 1K 0.5% 1/10W
R822	1-216-651-11	s	METAL, CHIP 1K 0.5% 1/10W
R823	1-216-651-11	s	METAL, CHIP 1K 0.5% 1/10W
R824	1-216-623-11	s	METAL, CHIP 68 0.5% 1/10W
R825	1-216-623-11	s	METAL, CHIP 68 0.5% 1/10W
R826	1-216-623-11	s	METAL, CHIP 68 0.5% 1/10W
R827	1-216-623-11	s	METAL, CHIP 68 0.5% 1/10W
R828	1-216-683-11	s	METAL, CHIP 22K 0.5% 1/10W
R829	1-216-683-11	s	METAL, CHIP 22K 0.5% 1/10W
R831	1-216-683-11	s	METAL, CHIP 22K 0.5% 1/10W
R832	1-216-295-00	s	METAL, CHIP 0-OHM
R833	1-216-683-11	s	METAL, CHIP 22K 0.5% 1/10W
R834	1-216-295-00	s	METAL, CHIP 0-OHM
R835	1-216-683-11	s	METAL, CHIP 22K 0.5% 1/10W
R837	1-216-675-11	s	METAL, CHIP 10K 0.5% 1/10W
R841	1-216-646-11	s	METAL, CHIP 620 0.5% 1/10W
R842	1-216-646-11	s	METAL, CHIP 620 0.5% 1/10W
R843	1-216-646-11	s	METAL, CHIP 620 0.5% 1/10W
R844	1-216-646-11	s	METAL, CHIP 620 0.5% 1/10W
R845	1-216-646-11	s	METAL, CHIP 620 0.5% 1/10W
R846	1-216-646-11	s	METAL, CHIP 620 0.5% 1/10W
R847	1-216-646-11	s	METAL, CHIP 620 0.5% 1/10W
R848	1-216-646-11	s	METAL, CHIP 620 0.5% 1/10W
R849	1-216-646-11	s	METAL, CHIP 620 0.5% 1/10W
R850	1-216-646-11	s	METAL, CHIP 620 0.5% 1/10W
R851	1-216-646-11	s	METAL, CHIP 620 0.5% 1/10W
R852	1-216-646-11	s	METAL, CHIP 620 0.5% 1/10W
R853	1-216-646-11	s	METAL, CHIP 620 0.5% 1/10W
R854	1-216-646-11	s	METAL, CHIP 620 0.5% 1/10W
R855	1-216-646-11	s	METAL, CHIP 620 0.5% 1/10W
R856	1-216-646-11	s	METAL, CHIP 620 0.5% 1/10W
R857	1-216-646-11	s	METAL, CHIP 620 0.5% 1/10W
R858	1-216-646-11	s	METAL, CHIP 620 0.5% 1/10W
R859	1-216-646-11	s	METAL, CHIP 620 0.5% 1/10W
R860	1-216-646-11	s	METAL, CHIP 620 0.5% 1/10W
R861	1-216-646-11	s	METAL, CHIP 620 0.5% 1/10W
R862	1-216-646-11	s	METAL, CHIP 620 0.5% 1/10W
R863	1-216-646-11	s	METAL, CHIP 620 0.5% 1/10W
R864	1-216-646-11	s	METAL, CHIP 620 0.5% 1/10W
R865	1-216-683-11	s	METAL, CHIP 22K 0.5% 1/10W

(DIF-11P BOARD)

Ref. No. or Q'ty	Part No.	SP	Description
R866	1-216-683-11	s	METAL, CHIP 22K 0.5% 1/10W
R867	1-216-683-11	s	METAL, CHIP 22K 0.5% 1/10W
R868	1-216-683-11	s	METAL, CHIP 22K 0.5% 1/10W
R869	1-216-683-11	s	METAL, CHIP 22K 0.5% 1/10W
R870	1-216-683-11	s	METAL, CHIP 22K 0.5% 1/10W
R871	1-216-683-11	s	METAL, CHIP 22K 0.5% 1/10W
R872	1-216-683-11	s	METAL, CHIP 22K 0.5% 1/10W
R873	1-216-683-11	s	METAL, CHIP 22K 0.5% 1/10W
R874	1-216-683-11	s	METAL, CHIP 22K 0.5% 1/10W
R875	1-216-683-11	s	METAL, CHIP 22K 0.5% 1/10W
R876	1-216-683-11	s	METAL, CHIP 22K 0.5% 1/10W
R877	1-216-683-11	s	METAL, CHIP 22K 0.5% 1/10W
R878	1-216-683-11	s	METAL, CHIP 22K 0.5% 1/10W
R879	1-216-683-11	s	METAL, CHIP 22K 0.5% 1/10W
R880	1-216-683-11	s	METAL, CHIP 22K 0.5% 1/10W
R881	1-216-683-11	s	METAL, CHIP 22K 0.5% 1/10W
R882	1-216-683-11	s	METAL, CHIP 22K 0.5% 1/10W
R883	1-216-683-11	s	METAL, CHIP 22K 0.5% 1/10W
R884	1-216-683-11	s	METAL, CHIP 22K 0.5% 1/10W
R885	1-216-683-11	s	METAL, CHIP 22K 0.5% 1/10W
R891	1-216-017-00	s	METAL, CHIP 47 5% 1/10W
R892	1-216-073-00	s	METAL, CHIP 10K 5% 1/10W
R893	1-216-627-11	s	METAL, CHIP 100 0.5% 1/10W
R894	1-216-631-11	s	METAL, CHIP 150 0.5% 1/10W
R895	1-216-627-11	s	METAL, CHIP 100 0.5% 1/10W
R896	1-216-631-11	s	METAL, CHIP 150 0.5% 1/10W
RV2	1-238-799-11	s	RES, ADJ METAL 1K
RV102	1-238-801-11	s	RES, ADJ METAL 5K
RV103	1-237-933-11	s	RES, ADJ, METAL 1K
RV104	1-237-933-11	s	RES, ADJ, METAL 1K
RV106	1-237-935-11	s	RES, ADJ, METAL 5K
RV107	1-237-935-11	s	RES, ADJ, METAL 5K
RV108	1-237-933-11	s	RES, ADJ, METAL 1K
RV109	1-237-933-11	s	RES, ADJ, METAL 1K
RV110	1-237-933-11	s	RES, ADJ, METAL 1K
RV111	1-237-934-11	s	RES, ADJ, METAL 2K
RV112	1-237-937-11	s	RES, ADJ, METAL 20K
RV113	1-238-801-11	s	RES, ADJ METAL 5K
RV114	1-238-801-11	s	RES, ADJ METAL 5K
RV115	1-238-803-11	s	RES, ADJ METAL 20K
RV400	1-238-802-11	s	RES, ADJ METAL 10K
RV401	1-238-805-11	s	RES, ADJ METAL 100K
RV402	1-238-802-11	s	RES, ADJ METAL 10K
RV403	1-238-805-11	s	RES, ADJ METAL 100K
RV404	1-238-802-11	s	RES, ADJ METAL 10K
RV405	1-238-805-11	s	RES, ADJ METAL 100K
RV406	1-238-802-11	s	RES, ADJ METAL 10K
RV407	1-238-805-11	s	RES, ADJ METAL 100K
RV600	1-238-800-11	s	RES, ADJ METAL 2K
RV601	1-238-803-11	s	RES, ADJ METAL 20K
RV602	1-238-800-11	s	RES, ADJ METAL 2K
RV603	1-238-803-11	s	RES, ADJ METAL 20K
RV604	1-238-800-11	s	RES, ADJ METAL 2K
RV605	1-238-803-11	s	RES, ADJ METAL 20K
RV606	1-238-800-11	s	RES, ADJ METAL 2K
RV607	1-238-803-11	s	RES, ADJ METAL 20K
RV801	1-238-801-11	s	RES, ADJ METAL 5K

(DIF-11P BOARD)

Ref. No. or Q'ty	Part No.	SP	Description
RY400	1-515-646-11	s	RELAY, REED
RY401	1-515-646-11	s	RELAY, REED
RY402	1-515-646-11	s	RELAY, REED
RY403	1-515-646-11	s	RELAY, REED
RY600	1-515-646-11	s	RELAY, REED
RY601	1-515-646-11	s	RELAY, REED
RY602	1-515-646-11	s	RELAY, REED
RY603	1-515-646-11	s	RELAY, REED
S102	1-552-509-00	s	SWITCH, DIP 1-CKT
S800	1-553-925-00	s	SWITCH, DIGITAL
S801	1-552-509-00	s	SWITCH, DIP 1-CKT

DP-128 BOARD

Ref. No. or Q'ty	Part No.	SP	Description
C10	1-163-105-00	s	CERAMIC, CHIP 33PF 5% 50V
C11	1-135-159-21	s	TANTALUM, CHIP 10uF 10% 20V
C12	1-163-037-11	s	CERAMIC, CHIP 0.022uF 10% 25V
C13	1-163-235-11	s	CERAMIC, CHIP 22PF 5% 50V
C20	1-163-105-00	s	CERAMIC, CHIP 33PF 5% 50V
C21	1-135-159-21	s	TANTALUM, CHIP 10uF 10% 20V
C22	1-163-037-11	s	CERAMIC, CHIP 0.022uF 10% 25V
C23	1-163-235-11	s	CERAMIC, CHIP 22PF 5% 50V
C30	1-163-105-00	s	CERAMIC, CHIP 33PF 5% 50V
C31	1-135-159-21	s	TANTALUM, CHIP 10uF 10% 20V
C32	1-163-037-11	s	CERAMIC, CHIP 0.022uF 10% 25V
C33	1-163-235-11	s	CERAMIC, CHIP 22PF 5% 50V
C40	1-163-105-00	s	CERAMIC, CHIP 33PF 5% 50V
C41	1-135-159-21	s	TANTALUM, CHIP 10uF 10% 20V
C42	1-163-037-11	s	CERAMIC, CHIP 0.022uF 10% 25V
C43	1-163-235-11	s	CERAMIC, CHIP 22PF 5% 50V
C51	1-163-037-11	s	CERAMIC, CHIP 0.022uF 10% 25V
C52	1-163-037-11	s	CERAMIC, CHIP 0.022uF 10% 25V
C53	1-126-394-11	s	ELECT, CHIP 10uF 20% 16V
C54	1-126-394-11	s	ELECT, CHIP 10uF 20% 16V
C55	1-126-394-11	s	ELECT, CHIP 10uF 20% 16V
C56	1-163-037-11	s	CERAMIC, CHIP 0.022uF 10% 25V
C57	1-126-394-11	s	ELECT, CHIP 10uF 20% 16V
CN510	1-580-536-11	s	CONNECTOR, LY 14P, MALE
IC11	8-759-710-28	s	IC NJM4565M-A
IC12	8-759-710-28	s	IC NJM4565M-A
IC22	8-759-710-28	s	IC NJM4565M-A
IC31	8-759-710-28	s	IC NJM4565M-A
IC32	8-759-710-28	s	IC NJM4565M-A
IC42	8-759-710-28	s	IC NJM4565M-A
IC51	8-759-929-26	s	IC TL431CPS
L51	1-408-785-21	s	INDUCTOR CHIP 47UH
Q11	8-729-905-12	s	TRANSISTOR DTA144EU
Q12	8-729-905-18	s	TRANSISTOR DTC144EU
Q13	8-729-801-46	s	TRANSISTOR 2SC3064F-6B-TJ
Q21	8-729-905-12	s	TRANSISTOR DTA144EU
Q22	8-729-905-18	s	TRANSISTOR DTC144EU
Q23	8-729-801-46	s	TRANSISTOR 2SC3064F-6B-TJ
Q31	8-729-905-12	s	TRANSISTOR DTA144EU
Q32	8-729-905-18	s	TRANSISTOR DTC144EU
Q33	8-729-801-46	s	TRANSISTOR 2SC3064F-6B-TJ
Q42	8-729-905-18	s	TRANSISTOR DTC144EU
Q43	8-729-801-46	s	TRANSISTOR 2SC3064F-6B-TJ
R10	1-216-699-11	s	METAL, CHIP 100K 0.5% 1/10W
R11	1-216-675-11	s	METAL, CHIP 10K 0.5% 1/10W
R12	1-216-685-11	s	METAL, CHIP 27K 0.5% 1/10W
R13	1-216-081-00	s	METAL, CHIP 22K 5% 1/10W
R15	1-216-658-11	s	METAL, CHIP 2K 0.5% 1/10W
R16	1-216-685-11	s	METAL, CHIP 27K 0.5% 1/10W
R17	1-216-658-11	s	METAL, CHIP 2K 0.5% 1/10W
R18	1-218-770-11	s	METAL, CHIP 560K 0.50% 1/10W
R20	1-216-699-11	s	METAL, CHIP 100K 0.5% 1/10W
R21	1-216-675-11	s	METAL, CHIP 10K 0.5% 1/10W
R22	1-216-685-11	s	METAL, CHIP 27K 0.5% 1/10W
R23	1-216-081-00	s	METAL, CHIP 22K 5% 1/10W

(DF-126 BOARD)

Ref. No. or Q'ty	Part No.	SP	Description
R25	1-216-658-11	s	METAL, CHIP 2K 0.5% 1/10W
R26	1-216-685-11	s	METAL, CHIP 27K 0.5% 1/10W
R27	1-216-658-11	s	METAL, CHIP 2K 0.5% 1/10W
R28	1-218-770-11	s	METAL, CHIP 560K 0.50% 1/10W
R30	1-216-699-11	s	METAL, CHIP 100K 0.5% 1/10W
R31	1-216-675-11	s	METAL, CHIP 10K 0.5% 1/10W
R32	1-216-685-11	s	METAL, CHIP 27K 0.5% 1/10W
R33	1-216-081-00	s	METAL, CHIP 22K 5% 1/10W
R35	1-216-658-11	s	METAL, CHIP 2K 0.5% 1/10W
R36	1-216-685-11	s	METAL, CHIP 27K 0.5% 1/10W
R37	1-216-658-11	s	METAL, CHIP 2K 0.5% 1/10W
R38	1-218-770-11	s	METAL, CHIP 560K 0.50% 1/10W
R40	1-216-699-11	s	METAL, CHIP 100K 0.5% 1/10W
R41	1-216-675-11	s	METAL, CHIP 10K 0.5% 1/10W
R42	1-216-685-11	s	METAL, CHIP 27K 0.5% 1/10W
R43	1-216-081-00	s	METAL, CHIP 22K 5% 1/10W
R45	1-216-658-11	s	METAL, CHIP 2K 0.5% 1/10W
R46	1-216-685-11	s	METAL, CHIP 27K 0.5% 1/10W
R47	1-216-658-11	s	METAL, CHIP 2K 0.5% 1/10W
R48	1-218-770-11	s	METAL, CHIP 560K 0.50% 1/10W
R51	1-216-049-00	s	METAL, CHIP 1K 5% 1/10W
RV11	1-228-475-00	s	RES, ADJ, METAL 20K
RV12	1-228-475-00	s	RES, ADJ, METAL 20K
RV21	1-228-475-00	s	RES, ADJ, METAL 20K
RV22	1-228-475-00	s	RES, ADJ, METAL 20K
RV31	1-228-475-00	s	RES, ADJ, METAL 20K
RV32	1-228-475-00	s	RES, ADJ, METAL 20K
RV41	1-228-475-00	s	RES, ADJ, METAL 20K
RV42	1-228-475-00	s	RES, ADJ, METAL 20K

DF-127 BOARD

Ref. No. or Q'ty	Part No.	SP	Description
C101	1-163-109-00	s	CERAMIC, CHIP 47PF 5% 50V
C102	1-135-179-21	s	TANTALUM 2.2uF 10% 16V
C103	1-135-092-21	s	TANTALUM, CHIP 3.3uF 10% 16V
C104	1-135-073-00	s	TANTALUM, CHIP 0.33uF 10% 35V
C201	1-163-109-00	s	CERAMIC, CHIP 47PF 5% 50V
C202	1-135-179-21	s	TANTALUM 2.2uF 10% 16V
C203	1-135-092-21	s	TANTALUM, CHIP 3.3uF 10% 16V
C204	1-135-073-00	s	TANTALUM, CHIP 0.33uF 10% 35V
C301	1-163-109-00	s	CERAMIC, CHIP 47PF 5% 50V
C302	1-135-179-21	s	TANTALUM 2.2uF 10% 16V
C303	1-135-092-21	s	TANTALUM, CHIP 3.3uF 10% 16V
C304	1-135-073-00	s	TANTALUM, CHIP 0.33uF 10% 35V
C401	1-163-109-00	s	CERAMIC, CHIP 47PF 5% 50V
C402	1-135-179-21	s	TANTALUM 2.2uF 10% 16V
C403	1-135-092-21	s	TANTALUM, CHIP 3.3uF 10% 16V
C404	1-135-073-00	s	TANTALUM, CHIP 0.33uF 10% 35V
C512	1-565-061-11	c	CONNECTOR, 16P, FEMALE
D101	8-719-800-76	s	DIODE 1SS226
D102	8-719-123-85	s	DIODE 1SS304
D103	8-719-123-85	s	DIODE 1SS304
D104	8-719-123-85	s	DIODE 1SS304
D201	8-719-800-76	s	DIODE 1SS226
D202	8-719-123-85	s	DIODE 1SS304
D203	8-719-123-85	s	DIODE 1SS304
D204	8-719-123-85	s	DIODE 1SS304
D301	8-719-800-76	s	DIODE 1SS226
D302	8-719-123-85	s	DIODE 1SS304
D303	8-719-123-85	s	DIODE 1SS304
D304	8-719-123-85	s	DIODE 1SS304
D401	8-719-800-76	s	DIODE 1SS226
D402	8-719-123-85	s	DIODE 1SS304
D403	8-719-123-85	s	DIODE 1SS304
D404	8-719-123-85	s	DIODE 1SS304
IC101	8-759-710-28	s	IC NJM4565M-A
IC102	8-759-710-28	s	IC NJM4565M-A
IC103	8-759-981-65	s	IC LM2903M
IC104	8-759-209-15	s	IC TC4SU69F
IC105	8-759-209-15	s	IC TC4SU69F
IC201	8-759-710-28	s	IC NJM4565M-A
IC202	8-759-710-28	s	IC NJM4565M-A
IC203	8-759-981-65	s	IC LM2903M
IC301	8-759-710-28	s	IC NJM4565M-A
IC302	8-759-710-28	s	IC NJM4565M-A
IC303	8-759-981-65	s	IC LM2903M
IC401	8-759-710-28	s	IC NJM4565M-A
IC402	8-759-710-28	s	IC NJM4565M-A
IC403	8-759-981-65	s	IC LM2903M
JW516	1-535-900-11	c	CABLE, FLAT
Q101	8-729-905-18	s	TRANSISTOR DTC144EU
R101	1-216-073-00	s	METAL, CHIP 10K 5% 1/10W
R102	1-216-675-11	s	METAL, CHIP 10K 0.5% 1/10W
R103	1-216-682-11	s	METAL, CHIP 20K 0.5% 1/10W
R104	1-216-682-11	s	METAL, CHIP 20K 0.5% 1/10W
R105	1-216-049-00	s	METAL, CHIP 1K 5% 1/10W
R106	1-216-121-00	s	METAL, CHIP 1M 5% 1/10W

(DP-127 BOARD)

Ref. No. or Q'ty	Part No.	SP	Description
R107	1-216-677-11	s	METAL, CHIP 12K 0.5% 1/10W
R108	1-216-692-11	s	METAL, CHIP 51K 0.5% 1/10W
R109	1-216-698-11	s	METAL, CHIP 91K 0.5% 1/10W
R110	1-216-089-00	s	METAL, CHIP 47K 5% 1/10W
R111	1-216-683-11	s	METAL, CHIP 22K 0.5% 1/10W
R112	1-216-677-11	s	METAL, CHIP 12K 0.5% 1/10W
R113	1-216-073-00	s	METAL, CHIP 10K 5% 1/10W
R114	1-216-033-00	s	METAL, CHIP 220 5% 1/10W
R115	1-216-119-00	s	METAL, CHIP 820K 5% 1/10W
R116	1-216-089-00	s	METAL, CHIP 47K 5% 1/10W
R117	1-216-696-11	s	METAL, CHIP 75K 0.5% 1/10W
R118	1-216-697-11	s	METAL, CHIP 82K 0.5% 1/10W
R119	1-216-681-11	s	METAL, CHIP 47K 0.5% 1/10W
R120	1-216-673-11	s	METAL, CHIP 8.2K 0.5% 1/10W
R121	1-215-680-11	s	METAL, CHIP 2.4K 0.5% 1/10W
R122	1-216-663-11	s	METAL, CHIP 3.3K 0.5% 1/10W
R123	1-216-121-00	s	METAL, CHIP 1M 5% 1/10W
R124	1-216-685-11	s	METAL, CHIP 27K 0.5% 1/10W
R125	1-215-675-11	s	METAL, CHIP 10K 0.5% 1/10W
R126	1-215-689-11	s	METAL, CHIP 39K 0.5% 1/10W
R127	1-216-097-00	s	METAL, CHIP 100K 5% 1/10W
R128	1-216-049-00	s	METAL, CHIP 1K 5% 1/10W
R201	1-216-073-00	s	METAL, CHIP 10K 5% 1/10W
R202	1-216-675-11	s	METAL, CHIP 10K 0.5% 1/10W
R203	1-215-682-11	s	METAL, CHIP 20K 0.5% 1/10W
R204	1-216-682-11	s	METAL, CHIP 20K 0.5% 1/10W
R205	1-216-049-00	s	METAL, CHIP 1K 5% 1/10W
R206	1-216-121-00	s	METAL, CHIP 1M 5% 1/10W
R207	1-216-677-11	s	METAL, CHIP 12K 0.5% 1/10W
R208	1-216-692-11	s	METAL, CHIP 51K 0.5% 1/10W
R209	1-216-698-11	s	METAL, CHIP 91K 0.5% 1/10W
R210	1-216-089-00	s	METAL, CHIP 47K 5% 1/10W
R211	1-216-683-11	s	METAL, CHIP 22K 0.5% 1/10W
R212	1-216-677-11	s	METAL, CHIP 12K 0.5% 1/10W
R213	1-216-073-00	s	METAL, CHIP 10K 5% 1/10W
R214	1-216-033-00	s	METAL, CHIP 220 5% 1/10W
R215	1-216-119-00	s	METAL, CHIP 820K 5% 1/10W
R216	1-216-089-00	s	METAL, CHIP 47K 5% 1/10W
R217	1-215-696-11	s	METAL, CHIP 75K 0.5% 1/10W
R218	1-215-697-11	s	METAL, CHIP 82K 0.5% 1/10W
R222	1-216-663-11	s	METAL, CHIP 3.3K 0.5% 1/10W
R223	1-216-121-00	s	METAL, CHIP 1M 5% 1/10W
R225	1-215-689-11	s	METAL, CHIP 39K 0.5% 1/10W
R301	1-216-073-00	s	METAL, CHIP 10K 5% 1/10W
R302	1-216-675-11	s	METAL, CHIP 10K 0.5% 1/10W
R303	1-216-682-11	s	METAL, CHIP 20K 0.5% 1/10W
R304	1-216-682-11	s	METAL, CHIP 20K 0.5% 1/10W
R305	1-216-049-00	s	METAL, CHIP 1K 5% 1/10W
R306	1-216-121-00	s	METAL, CHIP 1M 5% 1/10W
R307	1-216-677-11	s	METAL, CHIP 12K 0.5% 1/10W
R308	1-216-692-11	s	METAL, CHIP 51K 0.5% 1/10W
R309	1-216-698-11	s	METAL, CHIP 91K 0.5% 1/10W
R310	1-216-089-00	s	METAL, CHIP 47K 5% 1/10W
R311	1-216-683-11	s	METAL, CHIP 22K 0.5% 1/10W
R312	1-216-677-11	s	METAL, CHIP 12K 0.5% 1/10W
R313	1-216-073-00	s	METAL, CHIP 10K 5% 1/10W
R314	1-216-033-00	s	METAL, CHIP 220 5% 1/10W
R315	1-216-119-00	s	METAL, CHIP 820K 5% 1/10W
R316	1-216-089-00	s	METAL, CHIP 47K 5% 1/10W

(DP-127 BOARD)

Ref. No. or Q'ty	Part No.	SP	Description
R317	1-216-696-11	s	METAL, CHIP 75K 0.5% 1/10W
R318	1-216-697-11	s	METAL, CHIP 82K 0.5% 1/10W
R319	1-216-675-11	s	METAL, CHIP 10K 0.5% 1/10W
R320	1-216-677-11	s	METAL, CHIP 12K 0.5% 1/10W
R322	1-216-663-11	s	METAL, CHIP 3.3K 0.5% 1/10W
R323	1-216-121-00	s	METAL, CHIP 1M 5% 1/10W
R326	1-216-689-11	s	METAL, CHIP 39K 0.5% 1/10W
R401	1-216-073-00	s	METAL, CHIP 10K 5% 1/10W
R402	1-216-675-11	s	METAL, CHIP 10K 0.5% 1/10W
R403	1-216-682-11	s	METAL, CHIP 20K 0.5% 1/10W
R404	1-216-682-11	s	METAL, CHIP 20K 0.5% 1/10W
R405	1-216-049-00	s	METAL, CHIP 1K 5% 1/10W
R406	1-216-121-00	s	METAL, CHIP 1M 5% 1/10W
R407	1-216-677-11	s	METAL, CHIP 12K 0.5% 1/10W
R408	1-216-692-11	s	METAL, CHIP 51K 0.5% 1/10W
R409	1-216-698-11	s	METAL, CHIP 91K 0.5% 1/10W
R410	1-216-089-00	s	METAL, CHIP 47K 5% 1/10W
R411	1-216-683-11	s	METAL, CHIP 22K 0.5% 1/10W
R412	1-216-677-11	s	METAL, CHIP 12K 0.5% 1/10W
R413	1-216-073-00	s	METAL, CHIP 10K 5% 1/10W
R414	1-216-033-00	s	METAL, CHIP 220 5% 1/10W
R415	1-216-119-00	s	METAL, CHIP 820K 5% 1/10W
R416	1-216-089-00	s	METAL, CHIP 47K 5% 1/10W
R417	1-216-696-11	s	METAL, CHIP 75K 0.5% 1/10W
R418	1-216-697-11	s	METAL, CHIP 82K 0.5% 1/10W
R422	1-216-663-11	s	METAL, CHIP 3.3K 0.5% 1/10W
R423	1-216-121-00	s	METAL, CHIP 1M 5% 1/10W
R426	1-216-689-11	s	METAL, CHIP 39K 0.5% 1/10W

DP-128 BOARD

Ref. No. or Q'ty	Part No.	SP	Description
1pc	1-464-821-21	s	CONVERTER, DC-DC
C101	1-124-343-00	s	ELECT 2200uF 20% 16V
C102	1-130-491-00	s	MYLAR 0.047uF 5% 50V
C104	1-163-037-11	s	CERAMIC, CHIP 0.022uF 10% 25V
C106	1-130-491-00	s	MYLAR 0.047uF 5% 50V
C107	1-124-910-11	s	ELECT 47uF 20% 50V
C108	1-130-491-00	s	MYLAR 0.047uF 5% 50V
CN513	1-565-060-11	o	CONNECTOR, 16P, MALE
JW517	1-536-900-11	o	CABLE, FLAT
L101	1-412-533-11	s	INDUCTOR 47uH
L102	1-412-533-11	s	INDUCTOR 47uH
S101	1-571-258-11	s	SWITCH, SLIDE
S102	1-571-258-11	s	SWITCH, SLIDE

DP-129 BOARD

Ref. No. or Q'ty	Part No.	SP	Description
C5	1-124-584-00	s	ELECT 100uF 20% 10V
C6	1-124-248-00	s	ELECT 22uF 20% 35V
C7	1-163-037-11	s	CERAMIC, CHIP 0.022uF 10% 25V
C8	1-124-584-00	s	ELECT 100uF 20% 10V
C9	1-124-584-00	s	ELECT 100uF 20% 10V
C10	1-163-037-11	s	CERAMIC, CHIP 0.022uF 10% 25V
C11	1-163-105-00	s	CERAMIC, CHIP 33PF 5% 50V
C12	1-163-105-00	s	CERAMIC, CHIP 33PF 5% 50V
C13	1-126-160-11	s	ELECT 1uF 20% 50V
C14	1-124-584-00	s	ELECT 100uF 20% 10V
D1	8-719-109-66	s	DIODE RD3.3ES-B2
D2	8-719-123-85	s	DIODE 1SS304
D3	8-719-109-72	s	DIODE RD3.9ES-B2
D4	8-719-123-85	s	DIODE 1SS304
D5	8-719-123-85	s	DIODE 1SS304
IC1	8-759-942-62	s	IC MB88515B-280M
IC2	8-759-904-71	s	IC MSL917BS
Q3	8-729-905-12	s	TRANSISTOR DTA144EU
Q4	8-729-117-32	s	TRANSISTOR 2SC4177
Q5	8-729-117-32	s	TRANSISTOR 2SC4177
R1	1-216-089-00	s	METAL, CHIP 47K 5% 1/10W
R2	1-216-089-00	s	METAL, CHIP 47K 5% 1/10W
R3	1-216-049-00	s	METAL, CHIP 1K 5% 1/10W
R4	1-216-097-00	s	METAL, CHIP 100K 5% 1/10W
R5	1-216-103-00	s	METAL, CHIP 180K 5% 1/10W
R6	1-216-103-00	s	METAL, CHIP 180K 5% 1/10W
R7	1-216-103-00	s	METAL, CHIP 180K 5% 1/10W
R8	1-216-103-00	s	METAL, CHIP 180K 5% 1/10W
R9	1-216-103-00	s	METAL, CHIP 180K 5% 1/10W
R10	1-216-103-00	s	METAL, CHIP 180K 5% 1/10W
R11	1-216-103-00	s	METAL, CHIP 180K 5% 1/10W
R12	1-216-103-00	s	METAL, CHIP 180K 5% 1/10W
R13	1-216-103-00	s	METAL, CHIP 180K 5% 1/10W
R14	1-216-103-00	s	METAL, CHIP 180K 5% 1/10W
R15	1-216-103-00	s	METAL, CHIP 180K 5% 1/10W
R16	1-216-103-00	s	METAL, CHIP 180K 5% 1/10W
R17	1-216-103-00	s	METAL, CHIP 180K 5% 1/10W
R18	1-216-103-00	s	METAL, CHIP 180K 5% 1/10W
R19	1-216-103-00	s	METAL, CHIP 180K 5% 1/10W
R20	1-216-103-00	s	METAL, CHIP 180K 5% 1/10W
R21	1-216-103-00	s	METAL, CHIP 180K 5% 1/10W
R22	1-216-103-00	s	METAL, CHIP 180K 5% 1/10W
R23	1-216-103-00	s	METAL, CHIP 180K 5% 1/10W
R24	1-216-103-00	s	METAL, CHIP 180K 5% 1/10W
R25	1-216-103-00	s	METAL, CHIP 180K 5% 1/10W
R26	1-216-103-00	s	METAL, CHIP 180K 5% 1/10W
R27	1-216-103-00	s	METAL, CHIP 180K 5% 1/10W
R28	1-216-103-00	s	METAL, CHIP 180K 5% 1/10W
R29	1-216-103-00	s	METAL, CHIP 180K 5% 1/10W
R30	1-216-103-00	s	METAL, CHIP 180K 5% 1/10W
R31	1-216-103-00	s	METAL, CHIP 180K 5% 1/10W
R32	1-216-103-00	s	METAL, CHIP 180K 5% 1/10W
R33	1-216-103-00	s	METAL, CHIP 180K 5% 1/10W
R34	1-216-103-00	s	METAL, CHIP 180K 5% 1/10W
R35	1-216-103-00	s	METAL, CHIP 180K 5% 1/10W
R36	1-216-103-00	s	METAL, CHIP 180K 5% 1/10W
R37	1-216-103-00	s	METAL, CHIP 180K 5% 1/10W

(DP-129 BOARD)

Ref. No. or Q'ty	Part No.	SP	Description
R38	1-216-103-00	s	METAL, CHIP 180K 5% 1/10W
R39	1-216-075-00	s	METAL, CHIP 12K 5% 1/10W
R40	1-216-085-00	s	METAL, CHIP 33K 5% 1/10W
R41	1-216-069-00	s	METAL, CHIP 6.8K 5% 1/10W
R42	1-216-065-00	s	METAL, CHIP 4.7K 5% 1/10W
R43	1-216-041-00	s	METAL, CHIP 47Ω 5% 1/10W
R44	1-216-073-00	s	METAL, CHIP 10K 5% 1/10W
R45	1-216-073-00	s	METAL, CHIP 10K 5% 1/10W
R46	1-216-073-00	s	METAL, CHIP 10K 5% 1/10W
R47	1-216-073-00	s	METAL, CHIP 10K 5% 1/10W
R48	1-216-097-00	s	METAL, CHIP 100K 5% 1/10W
R49	1-216-097-00	s	METAL, CHIP 100K 5% 1/10W
R51	1-249-426-11	s	CARBON 5.6K 5% 1/4W
R52	1-249-399-11	s	CARBON 33 5% 1/4W
RV1	1-228-471-00	s	RES, ADJ, METAL 1K
X1	1-567-143-00	s	RESONATOR, CERAMIC 6.00MHz

DP-136 BOARD

Ref. No. or Q'ty	Part No.	SP	Description
This board is included in the KV-188D board.			
1pc	1-634-413-11	o	PRINTED CIRCUIT BOARD, DP-136
CN3	1-535-699-11	o	CABLE, JUMPER 23P
D60	8-719-942-19	s	LED LB402VK
D61	8-719-942-19	s	LED LB402VK
D62	8-719-942-19	s	LED LB402VK
D63	8-719-942-19	s	LED LB402VK
S29	1-552-539-00	s	SWITCH, TACTILE
S30	1-552-539-00	s	SWITCH, TACTILE
S31	1-552-539-00	s	SWITCH, TACTILE

DP-156 BOARD

Ref. No. or Q'ty	Part No.	SP	Description
1pc	1-640-671-11	o	PRINTED CIRCUIT BOARD, DP-156
1pc	3-717-323-01	o	COVER, METER LED
CN558	1-506-481-11	s	CONNECTOR, 2P, MALE
D1	8-719-820-27	s	LED TLY-256, YEL
D2	8-719-820-27	s	LED TLY-256, YEL
D3	8-719-820-27	s	LED TLY-256, YEL
D4	8-719-820-27	s	LED TLY-256, YEL
R1	1-249-409-11	s	CARBON 220 5% 1/4W
R2	1-249-409-11	s	CARBON 220 5% 1/4W

DR-118B BOARD

Ref. No. or Q'ty	Part No.	SP	Description
1pc	A-6717-631-A	o	MOUNTED CIRCUIT BOARD, DR-118B
1pc	3-171-393-01	o	SUPPORT, DR
1pc	7-682-903-11	s	SCREW +PWH 3X6
1pc	3-660-978-00	s	SHEET, HEAT RESISTING
3pcs	7-682-903-11	s	SCREW +PWH 3X6
1pc	3-171-493-01	o	HEAT SINK (A)
4pcs	4-911-232-01	s	SHEET, INSULATING
3pcs	3-660-978-00	s	SHEET, HEAT RESISTING
4pcs	7-682-548-04	s	SCREW +B 3X8
3pcs	2-371-561-00	s	BUSHING (P), INSULATING
4pcs	7-682-548-04	s	SCREW +B 3X8
1pc	1-535-894-11	o	TAB, FASTON
1pc	2-371-561-00	s	BUSHING (P), INSULATING
3pcs	3-314-051-00	o	CLAMP, LEAD
C1	1-163-037-11	s	CERAMIC, CHIP 0.022uF 10% 25V
C51	1-163-037-11	s	CERAMIC, CHIP 0.022uF 10% 25V
C52	1-163-037-11	s	CERAMIC, CHIP 0.022uF 10% 25V
C53	1-163-037-11	s	CERAMIC, CHIP 0.022uF 10% 25V
C101	1-164-232-11	s	CERAMIC 0.01uF 10% 100V
C102	1-163-809-11	s	CERAMIC, CHIP 0.047uF 10% 25V
C103	1-124-120-11	s	ELECT 220uF 20% 25V
C104	1-124-907-11	s	ELECT 10uF 20% 50V
C111	1-124-907-11	s	ELECT 10uF 20% 50V
C121	1-124-907-11	s	ELECT 10uF 20% 50V
C151	1-163-235-11	s	CERAMIC, CHIP 22PF 5% 50V
C201	1-126-233-11	s	ELECT 22uF 20% 50V
C202	1-126-233-11	s	ELECT 22uF 20% 50V
C204	1-163-986-00	s	CERAMIC 0.027uF 10% 25V
C205	1-163-986-00	s	CERAMIC 0.027uF 10% 25V
C206	1-163-109-00	s	CERAMIC, CHIP 47PF 5% 50V
C208	1-163-986-00	s	CERAMIC 0.027uF 10% 25V
C209	1-163-986-00	s	CERAMIC 0.027uF 10% 25V
C210	1-163-109-00	s	CERAMIC, CHIP 47PF 5% 50V
C251	1-163-105-00	s	CERAMIC, CHIP 33PF 5% 50V
C252	1-164-161-11	s	CERAMIC, CHIP 0.0022uF 10% 100V
C253	1-164-182-11	s	CERAMIC CHIP 3300PF 10% 100V
C254	1-163-275-11	s	CERAMIC, CHIP 0.001uF 5% 50V
C261	1-163-105-00	s	CERAMIC, CHIP 33PF 5% 50V
C262	1-164-161-11	s	CERAMIC, CHIP 0.0022uF 10% 100V
C263	1-164-182-11	s	CERAMIC CHIP 3300PF 10% 100V
C271	1-163-105-00	s	CERAMIC, CHIP 33PF 5% 50V
C272	1-164-161-11	s	CERAMIC, CHIP 0.0022uF 10% 100V
C273	1-164-182-11	s	CERAMIC CHIP 3300PF 10% 100V
C274	1-163-275-11	s	CERAMIC, CHIP 0.001uF 5% 50V
C281	1-163-105-00	s	CERAMIC, CHIP 33PF 5% 50V
C282	1-164-161-11	s	CERAMIC, CHIP 0.0022uF 10% 100V
C283	1-164-182-11	s	CERAMIC CHIP 3300PF 10% 100V
C310	1-164-161-11	s	CERAMIC, CHIP 0.0022uF 10% 100V
C311	1-130-498-00	s	MYLAR 0.18uF 5% 50V
C312	1-124-907-11	s	ELECT 10uF 20% 50V
C313	1-163-275-11	s	CERAMIC, CHIP 0.001uF 5% 50V
C314	1-163-105-00	s	CERAMIC, CHIP 33PF 5% 50V
C317	1-164-161-11	s	CERAMIC, CHIP 0.0022uF 10% 100V
C318	1-130-498-00	s	MYLAR 0.18uF 5% 50V
C319	1-124-907-11	s	ELECT 10uF 20% 50V
C320	1-163-275-11	s	CERAMIC, CHIP 0.001uF 5% 50V
C321	1-163-105-00	s	CERAMIC, CHIP 33PF 5% 50V
C322	1-164-232-11	s	CERAMIC 0.01uF 10% 100V
C401	1-164-004-11	s	CERAMIC, CHIP 0.1uF 10% 25V

(DR-118B BOARD)

Ref. No. or Q'ty	Part No.	SP	Description
C402	1-163-037-11	s	CERAMIC, CHIP 0.022uF 10% 25V
C403	1-131-388-00	s	TANTALUM 68uF 10% 6.3V
C404	1-131-388-00	s	TANTALUM 68uF 10% 6.3V
C405	1-124-907-11	s	ELECT 10uF 20% 50V
C406	1-124-477-11	s	ELECT 47uF 20% 25V
C407	1-126-233-11	s	ELECT 22uF 20% 50V
C408	1-163-037-11	s	CERAMIC, CHIP 0.022uF 10% 25V
C409	1-163-037-11	s	CERAMIC, CHIP 0.022uF 10% 25V
C451	1-136-884-11	s	FILM 0.0022uF 5% 100V
C452	1-164-004-11	s	CERAMIC, CHIP 0.1uF 10% 25V
C453	1-163-263-11	s	CERAMIC, CHIP 330PF 5% 50V
C454	1-163-809-11	s	CERAMIC, CHIP 0.047uF 10% 25V
C455	1-124-477-11	s	ELECT 47uF 20% 25V
C481	1-136-884-11	s	FILM 0.0022uF 5% 100V
C482	1-164-004-11	s	CERAMIC, CHIP 0.1uF 10% 25V
C483	1-163-263-11	s	CERAMIC, CHIP 330PF 5% 50V
C484	1-163-809-11	s	CERAMIC, CHIP 0.047uF 10% 25V
C485	1-124-477-11	s	ELECT 47uF 20% 25V
C501	1-124-907-11	s	ELECT 10uF 20% 50V
C502	1-164-232-11	s	CERAMIC 0.01uF 10% 100V
C503	1-163-986-00	s	CERAMIC 0.027uF 10% 25V
C504	1-163-109-00	s	CERAMIC, CHIP 47PF 5% 50V
C505	1-163-109-00	s	CERAMIC, CHIP 47PF 5% 50V
C551	1-124-477-11	s	ELECT 47uF 20% 25V
C552	1-124-907-11	s	ELECT 10uF 20% 50V
C553	1-163-809-11	s	CERAMIC, CHIP 0.047uF 10% 25V
C554	1-164-004-11	s	CERAMIC, CHIP 0.1uF 10% 25V
C555	1-130-477-00	s	MYLAR 0.0033uF 5% 50V
C556	1-163-251-11	s	CERAMIC, CHIP 100PF 5% 50V
C557	1-124-907-11	s	ELECT 10uF 20% 50V
C558	1-163-263-11	s	CERAMIC, CHIP 330PF 5% 50V
C559	1-163-251-11	s	CERAMIC, CHIP 100PF 5% 50V
C583	1-163-809-11	s	CERAMIC, CHIP 0.047uF 10% 25V
C584	1-164-004-11	s	CERAMIC, CHIP 0.1uF 10% 25V
C585	1-130-477-00	s	MYLAR 0.0033uF 5% 50V
C586	1-163-251-11	s	CERAMIC, CHIP 100PF 5% 50V
C587	1-124-907-11	s	ELECT 10uF 20% 50V
C588	1-163-263-11	s	CERAMIC, CHIP 330PF 5% 50V
C589	1-163-251-11	s	CERAMIC, CHIP 100PF 5% 50V
C596	1-163-037-11	s	CERAMIC, CHIP 0.022uF 10% 25V
C601	1-163-275-11	s	CERAMIC, CHIP 0.001uF 5% 50V
C602	1-163-275-11	s	CERAMIC, CHIP 0.001uF 5% 50V
C603	1-163-133-00	s	CERAMIC, CHIP 470PF 5% 50V
C651	1-163-275-11	s	CERAMIC, CHIP 0.001uF 5% 50V
C652	1-163-275-11	s	CERAMIC, CHIP 0.001uF 5% 50V
C653	1-163-133-00	s	CERAMIC, CHIP 470PF 5% 50V
C801	1-126-101-11	s	ELECT 100uF 20% 16V
C802	1-126-101-11	s	ELECT 100uF 20% 16V
C803	1-163-017-00	s	CERAMIC, CHIP 0.0047uF 5% 50V
C804	1-163-017-00	s	CERAMIC, CHIP 0.0047uF 5% 50V
C805	1-164-182-11	s	CERAMIC CHIP 3300PF 10% 100V
C806	1-164-161-11	s	CERAMIC, CHIP 0.0022uF 10% 100V
C807	1-163-018-00	s	CERAMIC, CHIP 0.0056uF 5% 50V
C808	1-136-562-11	s	FILM 0.0082uF 5% 630V
C809	1-131-368-00	s	TANTALUM 3.3uF 10% 16V
C901	1-126-101-11	s	ELECT 100uF 20% 16V
C902	1-124-480-11	s	ELECT 470uF 20% 25V
C903	1-124-443-00	s	ELECT 100uF 20% 10V
C904	1-126-101-11	s	ELECT 100uF 20% 16V

(DR-118B BOARD)

Ref. No. or Q'ty	Part No.	SP	Description
C905	1-124-480-11	s	ELECT 470uF 20% 25V
C906	1-124-907-11	s	ELECT 10uF 20% 50V
C907	1-124-907-11	s	ELECT 10uF 20% 50V
C908	1-124-907-11	s	ELECT 10uF 20% 50V
C909	1-124-907-11	s	ELECT 10uF 20% 50V
C951	1-124-907-11	s	ELECT 10uF 20% 50V
C952	1-163-833-00	s	CERAMIC, CHIP 0.068uF 25V
C953	1-163-263-11	s	CERAMIC, CHIP 330PF 5% 50V
C954	1-124-120-11	s	ELECT 220uF 20% 25V
C956	1-124-120-11	s	ELECT 220uF 20% 25V
C957	1-163-023-00	s	CERAMIC, CHIP 0.015uF 5% 50V
C958	1-163-037-11	s	CERAMIC, CHIP 0.022uF 10% 25V
C959	1-124-903-11	s	ELECT 1uF 20% 50V
C960	1-124-482-11	s	ELECT 33uF 20% 35V
C961	1-124-907-11	s	ELECT 10uF 20% 50V
CN300	1-564-209-00	o	CONNECTOR 10P, MALE
CN302	1-573-601-11	o	CONNECTOR, PS 64P, MALE
CN305	1-506-473-11	s	CONNECTOR, 8P, MALE
CN306	1-506-474-11	s	CONNECTOR, 9P, MALE
CN307	1-506-477-11	s	CONNECTOR, 12P, MALE
CN309	1-506-469-11	s	CONNECTOR, 4P, MALE
CN310	1-506-468-11	s	CONNECTOR, 3P, MALE
CN311	1-506-468-11	s	CONNECTOR, 3P, MALE
CN312	1-506-468-11	s	CONNECTOR, 3P, MALE
CN314	1-506-470-11	s	CONNECTOR, 5P, MALE
CN315	1-506-468-11	s	CONNECTOR, 3P, MALE
CN316	1-506-472-11	s	CONNECTOR, 7P, MALE
CN317	1-506-467-11	s	CONNECTOR, 2P, MALE
CN318	1-506-467-11	s	CONNECTOR, 2P, MALE
CN319	1-506-467-11	s	CONNECTOR, 2P, MALE
CN320	1-506-468-11	s	CONNECTOR, 3P, MALE
CN321	1-562-708-11	o	CONNECTOR, FPC 13P, FEMALE
CN322	1-562-708-12	o	CONNECTOR, FPC 13P, FEMALE
CN323	1-506-468-11	s	CONNECTOR, 3P, MALE
CN324	1-506-469-11	s	CONNECTOR, 4P, MALE
CN325	1-506-469-11	s	CONNECTOR, 4P, MALE
CN330	1-506-468-11	s	CONNECTOR, 3P, MALE
CN350	1-566-761-11	o	CONNECTOR, 6P, MALE
CN351	1-506-467-11	s	CONNECTOR, 2P, MALE
CN352	1-564-210-00	o	CONNECTOR, IL-S 12P, MALE
CN151	1-526-652-21	s	SOCKET, IC 8P
CN152	1-526-652-21	s	SOCKET, IC 8P
CN153	1-526-652-21	s	SOCKET, IC 8P
D101	8-719-200-02	s	DIODE 10E2
D102	8-719-200-02	s	DIODE 10E2
D111	8-719-200-02	s	DIODE 10E2
D112	8-719-200-02	s	DIODE 10E2
D121	8-719-200-02	s	DIODE 10E2
D122	8-719-200-02	s	DIODE 10E2
D302	8-719-123-85	s	DIODE 1SS304
D303	8-719-123-85	s	DIODE 1SS304
D401	8-719-123-85	s	DIODE 1SS304
D402	8-719-123-85	s	DIODE 1SS304
D551	8-719-123-85	s	DIODE 1SS304
D581	8-719-123-85	s	DIODE 1SS304
D601	8-719-123-82	s	DIODE 1SS303-T1
D951	8-719-303-06	s	DIODE ERC84-009
D952	8-719-106-08	s	DIODE RD6.2M-B2

(DR-118B BOARD)

Ref. No. or Q'ty	Part No.	SP	Description
IC1	8-759-938-68	s	IC CXD1095Q
IC5	8-759-800-34	s	IC M54532P
IC6	8-759-845-23	s	IC M54533P
IC51	8-752-330-61	s	IC CXK1013P
IC52	8-752-330-61	s	IC CXK1013P
IC53	8-752-330-61	s	IC CXK1013P
IC54	8-759-948-00	s	IC MB88341PFV
IC101	8-759-205-58	s	IC TA7287P
IC111	8-759-205-58	s	IC TA7287P
IC112	8-759-205-58	s	IC TA7287P
IC151	8-759-981-65	s	IC LM2903M
IC201	8-759-710-28	s	IC NJM4565M-A
IC251	8-759-106-02	s	IC UPC4570G2
IC252	8-759-981-65	s	IC LM2903M
IC271	8-759-106-02	s	IC UPC4570G2
IC272	8-759-981-65	s	IC LM2903M
IC303	8-759-981-65	s	IC LM2903M
IC304	8-759-925-80	s	IC SN74HC14NS
IC401	8-743-914-00	s	IC BX3914
IC402	8-759-106-02	s	IC UPC4570G2
IC403	8-759-008-79	s	IC MC14011BF
IC404	8-759-300-71	s	IC HD14053BFP
IC405	8-759-300-71	s	IC HD14053BFP
IC451	8-759-800-72	s	IC LA7205
IC481	8-759-800-72	s	IC LA7205
IC501	8-759-710-28	s	IC NJM4565M-A
IC551	8-759-981-92	s	IC RC4558M
IC552	8-759-981-92	s	IC RC4558M
IC553	8-759-981-65	s	IC LM2903M
IC554	8-759-981-65	s	IC LM2903M
IC555	8-759-981-92	s	IC RC4558M
IC556	8-759-925-80	s	IC SN74HC14NS
IC601	8-759-710-28	s	IC NJM4565M-A
IC602	8-759-908-18	s	IC TL072CPS
IC651	8-759-710-28	s	IC NJM4565M-A
IC901	8-759-982-10	s	IC RC7809FA
IC902	8-759-982-05	s	IC RC7805FA
IC903	8-759-982-05	s	IC RC7805FA
IC951	8-759-929-26	s	IC TL431CPS
IC952	8-759-100-94	s	IC UPC358G2
IC953	8-759-981-65	s	IC LM2903M
IC954	8-759-100-94	s	IC UPC358G2
L801	1-412-533-11	s	INDUCTOR 47uH
L901	1-412-533-11	s	INDUCTOR 47uH
L902	1-412-533-11	s	INDUCTOR 47uH
L903	1-412-533-11	s	INDUCTOR 47uH
L951	1-408-519-00	s	COIL, CHOKE
Q101	8-729-159-65	s	TRANSISTOR 2SD596-DV5
Q102	8-729-141-48	s	TRANSISTOR 2SB624-BV345
Q103	8-729-376-84	s	TRANSISTOR 2SA768-G
Q201	8-729-159-65	s	TRANSISTOR 2SD596-DV5
Q202	8-729-141-48	s	TRANSISTOR 2SB624-BV345
Q203	8-729-102-47	s	TRANSISTOR 2SA1141-Q
Q204	8-729-102-57	s	TRANSISTOR 2SC3012
Q205	8-729-159-65	s	TRANSISTOR 2SD596-DV5
Q206	8-729-141-48	s	TRANSISTOR 2SB624-BV345
Q207	8-729-102-47	s	TRANSISTOR 2SA1141-Q
Q208	8-729-102-57	s	TRANSISTOR 2SC3012

(DR-118B BOARD)

Ref. No. or Q'ty	Part No.	SP	Description
Q209	8-729-159-65	s	TRANSISTOR 2SD596-DV5
Q210	8-729-141-48	s	TRANSISTOR 2SB624-BV345
Q211	8-729-102-47	s	TRANSISTOR 2SA1141-Q
Q212	8-729-102-57	s	TRANSISTOR 2SC3012
Q401	8-729-905-18	s	TRANSISTOR DTC144EU
Q402	8-729-140-63	s	TRANSISTOR 2SA1611-M5M6
Q403	8-729-905-18	s	TRANSISTOR DTC144EU
Q404	8-729-905-18	s	TRANSISTOR DTC144EU
Q501	8-729-159-65	s	TRANSISTOR 2SD596-DV5
Q502	8-729-141-83	s	TRANSISTOR 2SB1094-LK
Q503	8-729-141-48	s	TRANSISTOR 2SB624-BV345
Q504	8-729-159-65	s	TRANSISTOR 2SD596-DV5
Q505	8-729-376-84	s	TRANSISTOR 2SA768-G
Q551	8-729-159-65	s	TRANSISTOR 2SD596-DV5
Q601	8-729-203-30	s	TRANSISTOR 2SJ106-Y
Q602	8-729-905-18	s	TRANSISTOR DTC144EU
Q603	8-729-905-12	s	TRANSISTOR DTA144EU
Q651	8-729-203-30	s	TRANSISTOR 2SJ106-Y
Q801	8-729-905-12	s	TRANSISTOR DTA144EU
Q802	8-729-140-63	s	TRANSISTOR 2SA1611-M5M6
Q803	8-729-102-78	s	TRANSISTOR 2SB982-E
Q804	8-729-117-32	s	TRANSISTOR 2SC4177
Q805	8-729-159-65	s	TRANSISTOR 2SD596-DV5
Q806	8-729-159-65	s	TRANSISTOR 2SD596-DV5
Q807	8-729-140-63	s	TRANSISTOR 2SA1611-M5M6
Q808	8-729-202-38	s	TRANSISTOR 2SC3326N
Q809	8-729-202-38	s	TRANSISTOR 2SC3326N
Q951	8-729-117-32	s	TRANSISTOR 2SC4177
Q952	8-729-140-63	s	TRANSISTOR 2SA1611-M5M6
Q953	8-729-142-68	s	TRANSISTOR 2SJ143
Q954	8-729-101-07	s	TRANSISTOR 2SB798
Q955	8-729-905-18	s	TRANSISTOR DTC144EU
R2	1-216-295-00	s	METAL, CHIP 0-OHM
R3	1-216-097-00	s	METAL, CHIP 100K 5% 1/10W
R4	1-216-295-00	s	METAL, CHIP 0-OHM
R5	1-216-073-00	s	METAL, CHIP 10K 5% 1/10W
R6	1-216-097-00	s	METAL, CHIP 100K 5% 1/10W
R7	1-216-073-00	s	METAL, CHIP 10K 5% 1/10W
R8	1-216-089-00	s	METAL, CHIP 47K 5% 1/10W
R9	1-216-073-00	s	METAL, CHIP 10K 5% 1/10W
R10	1-216-089-00	s	METAL, CHIP 47K 5% 1/10W
R11	1-216-073-00	s	METAL, CHIP 10K 5% 1/10W
R12	1-216-089-00	s	METAL, CHIP 47K 5% 1/10W
R13	1-216-073-00	s	METAL, CHIP 10K 5% 1/10W
R14	1-216-089-00	s	METAL, CHIP 47K 5% 1/10W
R15	1-216-073-00	s	METAL, CHIP 10K 5% 1/10W
R16	1-216-089-00	s	METAL, CHIP 47K 5% 1/10W
R17	1-216-073-00	s	METAL, CHIP 10K 5% 1/10W
R18	1-216-089-00	s	METAL, CHIP 47K 5% 1/10W
R19	1-216-073-00	s	METAL, CHIP 10K 5% 1/10W
R20	1-216-073-00	s	METAL, CHIP 10K 5% 1/10W
R21	1-216-073-00	s	METAL, CHIP 10K 5% 1/10W
R22	1-216-073-00	s	METAL, CHIP 10K 5% 1/10W
R23	1-216-073-00	s	METAL, CHIP 10K 5% 1/10W
R24	1-216-073-00	s	METAL, CHIP 10K 5% 1/10W
R25	1-216-073-00	s	METAL, CHIP 10K 5% 1/10W
R26	1-216-073-00	s	METAL, CHIP 10K 5% 1/10W
R27	1-216-073-00	s	METAL, CHIP 10K 5% 1/10W

(DR-118B BOARD)

Ref. No. or Q'ty	Part No.	SP	Description
R28	1-216-073-00	s	METAL, CHIP 10K 5% 1/10W
R29	1-216-073-00	s	METAL, CHIP 10K 5% 1/10W
R30	1-216-073-00	s	METAL, CHIP 10K 5% 1/10W
R31	1-216-073-00	s	METAL, CHIP 10K 5% 1/10W
R32	1-216-073-00	s	METAL, CHIP 10K 5% 1/10W
R33	1-216-073-00	s	METAL, CHIP 10K 5% 1/10W
R34	1-216-073-00	s	METAL, CHIP 10K 5% 1/10W
R35	1-216-073-00	s	METAL, CHIP 10K 5% 1/10W
R36	1-216-073-00	s	METAL, CHIP 10K 5% 1/10W
R37	1-216-073-00	s	METAL, CHIP 10K 5% 1/10W
R38	1-216-073-00	s	METAL, CHIP 10K 5% 1/10W
R42	1-216-295-00	s	METAL, CHIP 0-OHM
R43	1-216-033-00	s	METAL, CHIP 220 5% 1/10W
R44	1-216-033-00	s	METAL, CHIP 220 5% 1/10W
R45	1-216-033-00	s	METAL, CHIP 220 5% 1/10W
R46	1-216-045-00	s	METAL, CHIP 680 5% 1/10W
R51	1-216-089-00	s	METAL, CHIP 47K 5% 1/10W
R52	1-216-089-00	s	METAL, CHIP 47K 5% 1/10W
R53	1-216-089-00	s	METAL, CHIP 47K 5% 1/10W
R54	1-216-089-00	s	METAL, CHIP 47K 5% 1/10W
R55	1-216-089-00	s	METAL, CHIP 47K 5% 1/10W
R56	1-216-089-00	s	METAL, CHIP 47K 5% 1/10W
R101	1-216-105-00	s	METAL, CHIP 220K 5% 1/10W
R102 ⚠	1-215-863-11	s	METAL 100 5% 1W
R103 ⚠	1-215-868-00	s	METAL 680 5% 1W
R104 ⚠	1-215-867-00	s	METAL 470 5% 1W
R105 ⚠	1-216-385-11	s	METAL 0.47 5% 3W
R106	1-216-073-00	s	METAL, CHIP 10K 5% 1/10W
R107	1-216-073-00	s	METAL, CHIP 10K 5% 1/10W
R108 ⚠	1-216-383-11	s	METAL 0.33 5% 3W
R111	1-216-073-00	s	METAL, CHIP 10K 5% 1/10W
R112	1-216-073-00	s	METAL, CHIP 10K 5% 1/10W
R113 ⚠	1-216-383-11	s	METAL 0.33 5% 3W
R121	1-216-073-00	s	METAL, CHIP 10K 5% 1/10W
R122	1-216-073-00	s	METAL, CHIP 10K 5% 1/10W
R123 ⚠	1-216-383-11	s	METAL 0.33 5% 3W
R151	1-216-033-00	s	METAL, CHIP 220 5% 1/10W
R152	1-216-041-00	s	METAL, CHIP 470 5% 1/10W
R153	1-216-097-00	s	METAL, CHIP 100K 5% 1/10W
R154	1-216-115-00	s	METAL, CHIP 560K 5% 1/10W
R155	1-216-057-00	s	METAL, CHIP 2.2K 5% 1/10W
R156	1-216-081-00	s	METAL, CHIP 22K 5% 1/10W
R201	1-216-073-00	s	METAL, CHIP 10K 5% 1/10W
R202	1-216-073-00	s	METAL, CHIP 10K 5% 1/10W
R203	1-216-049-00	s	METAL, CHIP 1K 5% 1/10W
R204	1-216-049-00	s	METAL, CHIP 1K 5% 1/10W
R205 ⚠	1-215-864-00	s	METAL 150 5% 1W
R206	1-216-049-00	s	METAL, CHIP 1K 5% 1/10W
R207 ⚠	1-215-889-00	s	METAL 330 5% 2W
R208 ⚠	1-215-863-11	s	METAL 100 5% 1W
R209 ⚠	1-215-863-11	s	METAL 100 5% 1W
R210 ⚠	1-216-385-00	s	METAL 0.47 5% 2W
R211	1-216-073-00	s	METAL, CHIP 10K 5% 1/10W
R212	1-216-089-00	s	METAL, CHIP 47K 5% 1/10W
R213 ⚠	1-215-863-11	s	METAL 100 5% 1W
R214 ⚠	1-215-863-11	s	METAL 100 5% 1W
R215 ⚠	1-216-385-00	s	METAL 0.47 5% 2W
R216	1-216-073-00	s	METAL, CHIP 10K 5% 1/10W
R217	1-216-089-00	s	METAL, CHIP 47K 5% 1/10W

(DR-118B BOARD)

Ref. No. or Q'ty	Part No.	SP	Description
R251	1-216-079-00	s	METAL, CHIP 18K 5% 1/10W
R252	1-216-109-00	s	METAL, CHIP 330K 5% 1/10W
R253	1-216-057-00	s	METAL, CHIP 2.2K 5% 1/10W
R254	1-216-057-00	s	METAL, CHIP 2.2K 5% 1/10W
R255	1-216-073-00	s	METAL, CHIP 10K 5% 1/10W
R256	1-216-073-00	s	METAL, CHIP 10K 5% 1/10W
R258	1-216-121-00	s	METAL, CHIP 1M 5% 1/10W
R259	1-216-057-00	s	METAL, CHIP 2.2K 5% 1/10W
R260	1-216-073-00	s	METAL, CHIP 10K 5% 1/10W
R261	1-216-079-00	s	METAL, CHIP 18K 5% 1/10W
R262	1-216-109-00	s	METAL, CHIP 330K 5% 1/10W
R263	1-216-057-00	s	METAL, CHIP 2.2K 5% 1/10W
R264	1-216-057-00	s	METAL, CHIP 2.2K 5% 1/10W
R265	1-216-073-00	s	METAL, CHIP 10K 5% 1/10W
R266	1-216-073-00	s	METAL, CHIP 10K 5% 1/10W
R268	1-216-121-00	s	METAL, CHIP 1M 5% 1/10W
R269	1-216-057-00	s	METAL, CHIP 2.2K 5% 1/10W
R271	1-216-079-00	s	METAL, CHIP 18K 5% 1/10W
R272	1-216-109-00	s	METAL, CHIP 330K 5% 1/10W
R273	1-216-057-00	s	METAL, CHIP 2.2K 5% 1/10W
R274	1-216-057-00	s	METAL, CHIP 2.2K 5% 1/10W
R275	1-216-073-00	s	METAL, CHIP 10K 5% 1/10W
R276	1-216-073-00	s	METAL, CHIP 10K 5% 1/10W
R278	1-216-121-00	s	METAL, CHIP 1M 5% 1/10W
R279	1-216-057-00	s	METAL, CHIP 2.2K 5% 1/10W
R280	1-216-073-00	s	METAL, CHIP 10K 5% 1/10W
R281	1-216-079-00	s	METAL, CHIP 18K 5% 1/10W
R282	1-216-109-00	s	METAL, CHIP 330K 5% 1/10W
R283	1-216-057-00	s	METAL, CHIP 2.2K 5% 1/10W
R284	1-216-057-00	s	METAL, CHIP 2.2K 5% 1/10W
R285	1-216-073-00	s	METAL, CHIP 10K 5% 1/10W
R288	1-216-073-00	s	METAL, CHIP 10K 5% 1/10W
R288	1-216-121-00	s	METAL, CHIP 1M 5% 1/10W
R289	1-216-057-00	s	METAL, CHIP 2.2K 5% 1/10W
R291	1-216-049-00	s	METAL, CHIP 1K 5% 1/10W
R292	1-216-049-00	s	METAL, CHIP 1K 5% 1/10W
R293	1-216-049-00	s	METAL, CHIP 1K 5% 1/10W
R294	1-216-049-00	s	METAL, CHIP 1K 5% 1/10W
R313	1-216-295-00	s	METAL, CHIP 0-OHM
R316	1-216-067-00	s	METAL, CHIP 5.6K 5% 1/10W
R317	1-216-097-00	s	METAL, CHIP 100K 5% 1/10W
R318	1-216-097-00	s	METAL, CHIP 100K 5% 1/10W
R319	1-216-073-00	s	METAL, CHIP 10K 5% 1/10W
R320	1-216-071-00	s	METAL, CHIP 8.2K 5% 1/10W
R321	1-216-121-00	s	METAL, CHIP 1M 5% 1/10W
R322	1-216-073-00	s	METAL, CHIP 10K 5% 1/10W
R323	1-216-295-00	s	METAL, CHIP 0-OHM
R324	1-216-057-00	s	METAL, CHIP 2.2K 5% 1/10W
R325	1-216-025-00	s	METAL, CHIP 100 5% 1/10W
R333	1-216-073-00	s	METAL, CHIP 10K 5% 1/10W
R334	1-216-067-00	s	METAL, CHIP 5.6K 5% 1/10W
R335	1-216-097-00	s	METAL, CHIP 100K 5% 1/10W
R336	1-216-097-00	s	METAL, CHIP 100K 5% 1/10W
R337	1-216-073-00	s	METAL, CHIP 10K 5% 1/10W
R338	1-216-085-00	s	METAL, CHIP 33K 5% 1/10W
R339	1-216-109-00	s	METAL, CHIP 330K 5% 1/10W
R340	1-216-073-00	s	METAL, CHIP 10K 5% 1/10W
R341	1-216-057-00	s	METAL, CHIP 2.2K 5% 1/10W
R342	1-216-025-00	s	METAL, CHIP 100 5% 1/10W

(DR-118B BOARD)

Ref. No. or Q'ty	Part No.	SP	Description
R401	1-216-071-00	s	METAL, CHIP 8.2K 5% 1/10W
R402	1-216-133-00	s	METAL, CHIP 3.3M 5% 1/10W
R403	1-216-073-00	s	METAL, CHIP 10K 5% 1/10W
R404	1-216-069-00	s	METAL, CHIP 6.8K 5% 1/10W
R405	1-216-065-00	s	METAL, CHIP 4.7K 5% 1/10W
R406	1-216-646-11	s	METAL, CHIP 620 0.5% 1/10W
R407	1-216-065-00	s	METAL, CHIP 4.7K 5% 1/10W
R408	1-216-065-00	s	METAL, CHIP 4.7K 5% 1/10W
R409	1-216-089-00	s	METAL, CHIP 47K 5% 1/10W
R410	1-216-053-00	s	METAL, CHIP 1.5K 5% 1/10W
R411	1-216-089-00	s	METAL, CHIP 47K 5% 1/10W
R412	1-216-089-00	s	METAL, CHIP 47K 5% 1/10W
R413	1-216-025-00	s	METAL, CHIP 100 5% 1/10W
R414	1-216-073-00	s	METAL, CHIP 10K 5% 1/10W
R415	1-216-073-00	s	METAL, CHIP 10K 5% 1/10W
R416	1-216-073-00	s	METAL, CHIP 10K 5% 1/10W
R451	1-216-691-11	s	METAL, CHIP 47K 0.5% 1/10W
R452	1-216-089-00	s	METAL, CHIP 47K 5% 1/10W
R481	1-216-691-11	s	METAL, CHIP 47K 0.5% 1/10W
R482	1-216-089-00	s	METAL, CHIP 47K 5% 1/10W
R501	1-216-073-00	s	METAL, CHIP 10K 5% 1/10W
R502	1-216-073-00	s	METAL, CHIP 10K 5% 1/10W
R503 ⚠	1-215-866-11	s	METAL 330 5% 1W
R504	1-216-073-00	s	METAL, CHIP 10K 5% 1/10W
R505 ⚠	1-216-383-11	s	METAL 0.33 5% 3W
R506	1-216-105-00	s	METAL, CHIP 220K 5% 1/10W
R507 ⚠	1-215-863-11	s	METAL 100 5% 1W
R508 ⚠	1-215-863-11	s	METAL 100 5% 1W
R509 ⚠	1-216-385-00	s	METAL 0.47 5% 2W
R510	1-216-675-11	s	METAL, CHIP 10K 0.5% 1/10W
R511	1-216-675-11	s	METAL, CHIP 10K 0.5% 1/10W
R512	1-216-675-11	s	METAL, CHIP 10K 0.5% 1/10W
R513	1-216-675-11	s	METAL, CHIP 10K 0.5% 1/10W
R514	1-216-675-11	s	METAL, CHIP 10K 0.5% 1/10W
R515	1-216-688-11	s	METAL, CHIP 36K 0.5% 1/10W
R551	1-216-053-00	s	METAL, CHIP 1.5K 5% 1/10W
R552	1-216-087-00	s	METAL, CHIP 5.6K 5% 1/10W
R553	1-216-097-00	s	METAL, CHIP 100K 5% 1/10W
R554	1-216-097-00	s	METAL, CHIP 100K 5% 1/10W
R555	1-216-085-00	s	METAL, CHIP 33K 5% 1/10W
R556	1-216-073-00	s	METAL, CHIP 10K 5% 1/10W
R557	1-216-121-00	s	METAL, CHIP 1M 5% 1/10W
R558	1-216-073-00	s	METAL, CHIP 10K 5% 1/10W
R559	1-216-025-00	s	METAL, CHIP 100 5% 1/10W
R560	1-216-683-11	s	METAL, CHIP 22K 0.5% 1/10W
R561	1-216-678-11	s	METAL, CHIP 13K 0.5% 1/10W
R562	1-216-073-00	s	METAL, CHIP 10K 5% 1/10W
R563	1-216-089-00	s	METAL, CHIP 47K 5% 1/10W
R564	1-216-073-00	s	METAL, CHIP 10K 5% 1/10W
R565	1-216-121-00	s	METAL, CHIP 1M 5% 1/10W
R566	1-216-057-00	s	METAL, CHIP 2.2K 5% 1/10W
R567	1-216-073-00	s	METAL, CHIP 10K 5% 1/10W
R568	1-216-699-11	s	METAL, CHIP 100K 0.5% 1/10W
R569	1-216-684-11	s	METAL, CHIP 24K 0.5% 1/10W
R570	1-216-025-00	s	METAL, CHIP 100 5% 1/10W
R582	1-216-067-00	s	METAL, CHIP 5.6K 5% 1/10W
R583	1-216-097-00	s	METAL, CHIP 100K 5% 1/10W
R584	1-216-097-00	s	METAL, CHIP 100K 5% 1/10W
R585	1-216-085-00	s	METAL, CHIP 33K 5% 1/10W

(DR-118B BOARD)

Ref. No. or Q'ty	Part No.	SP	Description
R586	1-216-073-00	s	METAL, CHIP 10K 5% 1/10W
R587	1-216-121-00	s	METAL, CHIP 1M 5% 1/10W
R588	1-216-073-00	s	METAL, CHIP 10K 5% 1/10W
R589	1-216-025-00	s	METAL, CHIP 100 5% 1/10W
R590	1-216-683-11	s	METAL, CHIP 22K 0.5% 1/10W
R591	1-216-678-11	s	METAL, CHIP 13K 0.5% 1/10W
R592	1-216-073-00	s	METAL, CHIP 10K 5% 1/10W
R593	1-216-089-00	s	METAL, CHIP 47K 5% 1/10W
R594	1-216-073-00	s	METAL, CHIP 10K 5% 1/10W
R595	1-216-121-00	s	METAL, CHIP 1M 5% 1/10W
R596	1-216-057-00	s	METAL, CHIP 2.2K 5% 1/10W
R597	1-216-073-00	s	METAL, CHIP 10K 5% 1/10W
R598	1-216-699-11	s	METAL, CHIP 100K 0.5% 1/10W
R599	1-216-684-11	s	METAL, CHIP 24K 0.5% 1/10W
R600	1-216-025-00	s	METAL, CHIP 100 5% 1/10W
R601	1-216-681-11	s	METAL, CHIP 18K 0.5% 1/10W
R602	1-216-103-00	s	METAL, CHIP 180K 5% 1/10W
R603	1-216-681-11	s	METAL, CHIP 18K 0.5% 1/10W
R604	1-216-110-00	s	METAL, CHIP 360K 5% 1/10W
R605	1-216-110-00	s	METAL, CHIP 360K 5% 1/10W
R606	1-216-065-00	s	METAL, CHIP 4.7K 5% 1/10W
R607	1-216-065-00	s	METAL, CHIP 4.7K 5% 1/10W
R608	1-216-093-00	s	METAL, CHIP 68K 5% 1/10W
R609	1-216-089-00	s	METAL, CHIP 47K 5% 1/10W
R610	1-216-121-00	s	METAL, CHIP 1M 5% 1/10W
R611	1-216-121-00	s	METAL, CHIP 1M 5% 1/10W
R612	1-216-081-00	s	METAL, CHIP 22K 5% 1/10W
R651	1-216-681-11	s	METAL, CHIP 18K 0.5% 1/10W
R652	1-216-103-00	s	METAL, CHIP 180K 5% 1/10W
R653	1-216-681-11	s	METAL, CHIP 18K 0.5% 1/10W
R654	1-216-110-00	s	METAL, CHIP 360K 5% 1/10W
R655	1-216-110-00	s	METAL, CHIP 360K 5% 1/10W
R656	1-216-065-00	s	METAL, CHIP 4.7K 5% 1/10W
R657	1-216-065-00	s	METAL, CHIP 4.7K 5% 1/10W
R658	1-216-093-00	s	METAL, CHIP 68K 5% 1/10W
R659	1-216-089-00	s	METAL, CHIP 47K 5% 1/10W
R660	1-216-121-00	s	METAL, CHIP 1M 5% 1/10W
R661	1-216-121-00	s	METAL, CHIP 1M 5% 1/10W
R801	1-216-085-00	s	METAL, CHIP 33K 5% 1/10W
R802	1-216-065-00	s	METAL, CHIP 4.7K 5% 1/10W
R803	1-216-051-00	s	METAL, CHIP 1.2K 5% 1/10W
R804	1-216-081-00	s	METAL, CHIP 22K 5% 1/10W
R805	1-216-081-00	s	METAL, CHIP 22K 5% 1/10W
R806	1-216-093-00	s	METAL, CHIP 68K 5% 1/10W
R807	1-216-093-00	s	METAL, CHIP 68K 5% 1/10W
R808	1-249-381-11	s	CARBON 1 5% 1/4W
R809	1-216-073-00	s	METAL, CHIP 10K 5% 1/10W
R810	1-216-077-00	s	METAL, CHIP 15K 5% 1/10W
R811	1-216-057-00	s	METAL, CHIP 2.2K 5% 1/10W
R812	1-216-057-00	s	METAL, CHIP 2.2K 5% 1/10W
R951	1-216-057-00	s	METAL, CHIP 2.2K 5% 1/10W
R952	1-216-659-11	s	METAL, CHIP 2.2K 0.5% 1/10W
R953	1-216-659-11	s	METAL, CHIP 2.2K 0.5% 1/10W
R954	1-216-089-00	s	METAL, CHIP 47K 5% 1/10W
R955	1-216-075-00	s	METAL, CHIP 12K 5% 1/10W
R956	1-216-081-00	s	METAL, CHIP 22K 5% 1/10W
R957	1-216-113-00	s	METAL, CHIP 470K 5% 1/10W
R958	1-216-113-00	s	METAL, CHIP 470K 5% 1/10W
R959	1-216-115-00	s	METAL, CHIP 560K 5% 1/10W

(DR-118B BOARD)

Ref. No. or Q'ty	Part No.	SP	Description
R960	1-216-065-00	s	METAL, CHIP 4.7K 5% 1/10W
R961	1-216-069-00	s	METAL, CHIP 47K 5% 1/10W
R962	1-216-073-00	s	METAL, CHIP 10K 5% 1/10W
R963	1-216-057-00	s	METAL, CHIP 2.2K 5% 1/10W
R965	1-216-748-11	s	METAL, CHIP 39K 1% 1/10W
R966	1-216-748-11	s	METAL, CHIP 39K 1% 1/10W
R967	1-216-073-00	s	METAL, CHIP 10K 5% 1/10W
R968	1-216-057-00	s	METAL, CHIP 2.2K 5% 1/10W
R969	1-216-073-00	s	METAL, CHIP 10K 5% 1/10W
R970	1-216-097-00	s	METAL, CHIP 100K 5% 1/10W
R971	1-216-097-00	s	METAL, CHIP 100K 5% 1/10W
R972	1-216-073-00	s	METAL, CHIP 10K 5% 1/10W
R973	1-216-065-00	s	METAL, CHIP 4.7K 5% 1/10W
R974	1-216-675-11	s	METAL, CHIP 10K 0.5% 1/10W
R975	1-216-689-11	s	METAL, CHIP 5.6K 0.5% 1/10W
R976 ⚠	1-207-612-00	s	WIREWOUND 0.1 10% 3W
R977	1-216-675-11	s	METAL, CHIP 10K 0.5% 1/10W
R978	1-216-689-11	s	METAL, CHIP 39K 0.5% 1/10W
R979	1-216-675-11	s	METAL, CHIP 10K 0.5% 1/10W
R980	1-216-689-11	s	METAL, CHIP 39K 0.5% 1/10W
R981	1-216-073-00	s	METAL, CHIP 10K 5% 1/10W
T801	1-424-511-11	s	TRANSFORMER, FE

DS-31 BOARD

Ref. No. or Q'ty	Part No.	SP	Description
1pc	1-640-167-11	o	PRINTED CIRCUIT BOARD, DS-31
CN1	1-506-482-11	s	CONNECTOR, 3P, MALE
IC1	8-759-981-84	s	IC LM2903DQ
R1	1-215-456-00	s	METAL 30K 1% 1/6W
R2	1-215-437-00	s	METAL 4.7K 1% 1/6W
R3	1-215-419-00	s	METAL 820 1% 1/6W
R4	1-215-469-00	s	METAL 100K 1% 1/6W
R5	1-215-440-00	s	METAL 6.2K 1% 1/6W
R6	1-215-487-00	s	METAL 560K 1% 1/6W
R7	1-215-453-00	s	METAL 22K 1% 1/6W

DT-28 BOARD

Ref. No. or Q'ty	Part No.	SP	Description
1pc	A-6715-454-A	o	MOUNTED CIRCUIT BOARD, DT-28
1pc	3-171-455-01	o	PLATE (S), SHIELD, CARD
1pc	3-171-456-02	o	SHEET (S), CARD
1pc	7-621-759-45	s	+PSW, 2.6X6
C1	1-164-232-11	s	CERAMIC 0.01uF 10% 100V
C2	1-164-232-11	s	CERAMIC 0.01uF 10% 100V
C3	1-124-477-11	s	ELECT 47uF 20% 25V
C4	1-164-232-11	s	CERAMIC 0.01uF 10% 100V
C5	1-164-232-11	s	CERAMIC 0.01uF 10% 100V
C6	1-124-477-11	s	ELECT 47uF 20% 25V
C7	1-164-232-11	s	CERAMIC 0.01uF 10% 100V
C8	1-164-232-11	s	CERAMIC 0.01uF 10% 100V
C9	1-124-477-11	s	ELECT 47uF 20% 25V
C10	1-163-009-11	s	CERAMIC, CHIP 0.001uF 10% 50V
C11	1-163-009-11	s	CERAMIC, CHIP 0.001uF 10% 50V
C12	1-163-009-11	s	CERAMIC, CHIP 0.001uF 10% 50V
C13	1-163-019-00	s	CERAMIC, CHIP 0.0068uF 10% 50V
C14	1-163-009-11	s	CERAMIC, CHIP 0.001uF 10% 50V
C15	1-163-009-11	s	CERAMIC, CHIP 0.001uF 10% 50V
C16	1-126-101-11	s	ELECT 100uF 20% 16V
C17	1-164-232-11	s	CERAMIC 0.01uF 10% 100V
C18	1-163-009-11	s	CERAMIC, CHIP 0.001uF 10% 50V
C19	1-163-009-11	s	CERAMIC, CHIP 0.001uF 10% 50V
C20	1-124-034-51	s	ELECT 33uF 20% 16V
C21	1-164-232-11	s	CERAMIC 0.01uF 10% 100V
C22	1-163-009-11	s	CERAMIC, CHIP 0.001uF 10% 50V
C23	1-163-227-11	s	CERAMIC, CHIP 10PF 5% 50V
C24	1-163-227-11	s	CERAMIC, CHIP 10PF 5% 50V
C25	1-164-232-11	s	CERAMIC 0.01uF 10% 100V
C27	1-164-232-11	s	CERAMIC 0.01uF 10% 100V
C28	1-164-232-11	s	CERAMIC 0.01uF 10% 100V
C29	1-164-232-11	s	CERAMIC 0.01uF 10% 100V
C30	1-164-232-11	s	CERAMIC 0.01uF 10% 100V
C33	1-164-232-11	s	CERAMIC 0.01uF 10% 100V
C34	1-164-232-11	s	CERAMIC 0.01uF 10% 100V
C35	1-164-232-11	s	CERAMIC 0.01uF 10% 100V
C36	1-164-232-11	s	CERAMIC 0.01uF 10% 100V
C37	1-164-232-11	s	CERAMIC 0.01uF 10% 100V
C51	1-164-232-11	s	CERAMIC 0.01uF 10% 100V
C52	1-164-232-11	s	CERAMIC 0.01uF 10% 100V
C101	1-163-097-00	s	CERAMIC, CHIP 15PF 5% 50V
C102	1-163-097-00	s	CERAMIC, CHIP 15PF 5% 50V
C103	1-164-232-11	s	CERAMIC 0.01uF 10% 100V
C107	1-164-232-11	s	CERAMIC 0.01uF 10% 100V
C201	1-163-809-11	s	CERAMIC, CHIP 0.047uF 10% 25V
C202	1-164-232-11	s	CERAMIC 0.01uF 10% 100V
C203	1-164-232-11	s	CERAMIC 0.01uF 10% 100V
C204	1-163-037-11	s	CERAMIC, CHIP 0.022uF 10% 25V
C205	1-163-016-00	s	CERAMIC CHIP 0.0039MF 10% 50V
C206	1-163-009-11	s	CERAMIC, CHIP 0.001uF 10% 50V
C207	1-163-009-11	s	CERAMIC, CHIP 0.001uF 10% 50V
C208	1-163-016-00	s	CERAMIC CHIP 0.0039MF 10% 50V
C209	1-164-232-11	s	CERAMIC 0.01uF 10% 100V
C210	1-164-004-11	s	CERAMIC, CHIP 0.1uF 10% 25V
C211	1-164-232-11	s	CERAMIC 0.01uF 10% 100V
C212	1-164-232-11	s	CERAMIC 0.01uF 10% 100V
C213	1-164-232-11	s	CERAMIC 0.01uF 10% 100V
C214	1-164-232-11	s	CERAMIC 0.01uF 10% 100V
C215	1-164-232-11	s	CERAMIC 0.01uF 10% 100V

(DT-28 BOARD)

Ref. No. or Q'ty	Part No.	SP	Description
C216	1-164-004-11	s	CERAMIC, CHIP 0.1uF 10% 25V
C218	1-164-232-11	s	CERAMIC 0.01uF 10% 100V
C219	1-164-232-11	s	CERAMIC 0.01uF 10% 100V
C220	1-164-232-11	s	CERAMIC 0.01uF 10% 100V
C221	1-164-232-11	s	CERAMIC 0.01uF 10% 100V
C222	1-164-232-11	s	CERAMIC 0.01uF 10% 100V
C223	1-164-232-11	s	CERAMIC 0.01uF 10% 100V
C224	1-164-232-11	s	CERAMIC 0.01uF 10% 100V
C225	1-163-809-11	s	CERAMIC, CHIP 0.047uF 10% 25V
C226	1-164-232-11	s	CERAMIC 0.01uF 10% 100V
C227	1-164-232-11	s	CERAMIC 0.01uF 10% 100V
C228	1-163-037-11	s	CERAMIC, CHIP 0.022uF 10% 25V
C229	1-163-016-00	s	CERAMIC CHIP 0.0039MF 10% 50V
C230	1-163-009-11	s	CERAMIC, CHIP 0.001uF 10% 50V
C231	1-163-009-11	s	CERAMIC, CHIP 0.001uF 10% 50V
C232	1-163-016-00	s	CERAMIC CHIP 0.0039MF 10% 50V
C233	1-164-232-11	s	CERAMIC 0.01uF 10% 100V
C234	1-164-004-11	s	CERAMIC, CHIP 0.1uF 10% 25V
C235	1-164-232-11	s	CERAMIC 0.01uF 10% 100V
C236	1-164-232-11	s	CERAMIC 0.01uF 10% 100V
C237	1-164-232-11	s	CERAMIC 0.01uF 10% 100V
C238	1-164-232-11	s	CERAMIC 0.01uF 10% 100V
C239	1-164-232-11	s	CERAMIC 0.01uF 10% 100V
C240	1-164-004-11	s	CERAMIC, CHIP 0.1uF 10% 25V
C241	1-164-232-11	s	CERAMIC 0.01uF 10% 100V
C242	1-164-232-11	s	CERAMIC 0.01uF 10% 100V
C243	1-164-232-11	s	CERAMIC 0.01uF 10% 100V
C244	1-164-232-11	s	CERAMIC 0.01uF 10% 100V
C245	1-164-232-11	s	CERAMIC 0.01uF 10% 100V
C246	1-164-232-11	s	CERAMIC 0.01uF 10% 100V
C247	1-164-232-11	s	CERAMIC 0.01uF 10% 100V
C248	1-164-232-11	s	CERAMIC 0.01uF 10% 100V
C249	1-164-489-11	s	CERAMIC, CHIP 0.22uF 10% 16V
C250	1-164-004-11	s	CERAMIC, CHIP 0.1uF 10% 25V
C251	1-164-489-11	s	CERAMIC, CHIP 0.22uF 10% 16V
C252	1-164-004-11	s	CERAMIC, CHIP 0.1uF 10% 25V
C301	1-164-232-11	s	CERAMIC 0.01uF 10% 100V
C306	1-163-809-11	s	CERAMIC, CHIP 0.047uF 10% 25V
C307	1-124-477-11	s	ELECT 47uF 20% 25V
C308	1-164-232-11	s	CERAMIC 0.01uF 10% 100V
C309	1-164-232-11	s	CERAMIC 0.01uF 10% 100V
C311	1-124-477-11	s	ELECT 47uF 20% 25V
C312	1-163-809-11	s	CERAMIC, CHIP 0.047uF 10% 25V
C313	1-163-809-11	s	CERAMIC, CHIP 0.047uF 10% 25V
C314	1-163-809-11	s	CERAMIC, CHIP 0.047uF 10% 25V
C315	1-163-809-11	s	CERAMIC, CHIP 0.047uF 10% 25V
C316	1-163-108-00	s	CERAMIC, CHIP 43PF 5% 50V
C317	1-163-809-11	s	CERAMIC, CHIP 0.047uF 10% 25V
C318	1-163-809-11	s	CERAMIC, CHIP 0.047uF 10% 25V
C319	1-163-121-00	s	CERAMIC, CHIP 150PF 5% 50V
C320	1-124-477-11	s	ELECT 47uF 20% 25V
C321	1-164-004-11	s	CERAMIC, CHIP 0.1uF 10% 25V
C322	1-164-004-11	s	CERAMIC, CHIP 0.1uF 10% 25V
C323	1-164-004-11	s	CERAMIC, CHIP 0.1uF 10% 25V
C325	1-163-251-11	s	CERAMIC, CHIP 100PF 5% 50V
C326	1-163-609-11	s	CERAMIC, CHIP 0.047uF 10% 25V
C327	1-163-135-00	s	CERAMIC, CHIP 560PF 5% 50V
C328	1-163-809-11	s	CERAMIC, CHIP 0.047uF 10% 25V
C329	1-163-095-00	s	CERAMIC, CHIP 12PF 5% 50V

(DT-28 BOARD)

Ref. No. or Q'ty	Part No.	SP	Description
C330	1-163-097-00	s	CERAMIC, CHIP 15PF 5% 50V
CN1	1-506-484-11	s	CONNECTOR, 5P, MALE
CN116	1-573-782-21	o	CONNECTOR, PHEC 60P, MALE
CN117	1-573-782-21	o	CONNECTOR, PHEC 60P, MALE
CN15	1-540-069-11	s	SOCKET, IC (IC113) 84P
CN110	1-526-659-00	o	SOCKET, IC 28P
D1	8-719-941-23	s	DIODE DA204U
D2	8-719-941-23	s	DIODE DA204U
D3	8-719-941-23	s	DIODE DA204U
D4	8-719-941-23	s	DIODE DA204U
D5	8-719-941-23	s	DIODE DA204U
D6	8-719-941-23	s	DIODE DA204U
D7	8-719-941-23	s	DIODE DA204U
D8	8-719-941-23	s	DIODE DA204U
D9	8-719-941-23	s	DIODE DA204U
D10	8-719-800-60	s	LED TLR214, RED
D11	8-719-123-82	s	DIODE 1SS303-T1
D201	8-719-938-72	s	DIODE SB01-05CP
D202	8-719-938-72	s	DIODE SB01-05CP
D203	8-719-941-23	s	DIODE DA204U
D204	8-719-941-23	s	DIODE DA204U
D301	8-719-938-72	s	DIODE SB01-05CP
IC1	8-759-154-71	s	IC CXD8176Q
IC2	8-752-323-63	s	IC CXK5816M-10L
IC5	8-759-323-74	s	IC HD6475328CP10
IC8	8-759-925-74	s	IC SN74HC04NS
IC10	8-759-748-46	s	IC TMS27C256-20JL
IC20	8-759-938-68	s	IC CXD1095Q
IC21	8-759-925-11	s	IC SN74HC138NS
IC27	8-759-925-76	s	IC SN74HC00NS
IC29	8-759-925-85	s	IC SN74HC32NS
IC101	8-752-340-03	s	IC CXD2202Q
IC103	8-759-925-90	s	IC SN74HC74NS
IC201	8-759-908-92	s	IC TL084CNS
IC202	8-759-908-92	s	IC TL084CNS
IC203	8-759-925-05	s	IC LM2903FS
IC204	8-759-908-17	s	IC TL062CPS
IC205	8-759-300-71	s	IC HD14053BFP
IC206	8-759-908-92	s	IC TL084CNS
IC207	8-759-908-92	s	IC TL084CNS
IC208	8-759-908-17	s	IC TL062CPS
IC209	8-759-300-71	s	IC HD14053BFP
IC210	8-759-300-71	s	IC HD14053BFP
IC302	8-759-155-00	s	IC CXD8177Q
IC305	8-752-006-00	s	IC CX20060
IC307	8-759-324-11	s	IC HA12411
IC308	8-759-982-25	s	IC RC78L09A
IC309	8-759-201-47	s	IC TA7357AP
IC310	8-749-920-42	s	IC BX-1098L
L1	1-412-533-11	s	INDUCTOR 47uH
L2	1-412-533-11	s	INDUCTOR 47uH
L3	1-412-533-11	s	INDUCTOR 47uH
L4	1-412-533-11	s	INDUCTOR 47uH
L301	1-412-533-11	s	INDUCTOR 47uH
L302	1-408-413-00	s	INDUCTOR 22uH
L303	1-410-468-11	s	INDUCTOR 6.8uH

(DT-28 BOARD)

Ref. No. or Q'ty	Part No.	SP	Description
L304	1-408-429-00	s	INDUCTOR 470uH
L305	1-412-533-11	s	INDUCTOR 47uH
Q1	8-729-905-18	s	TRANSISTOR DTC144EU
Q2	8-729-117-32	s	TRANSISTOR 2SC4177
Q3	8-729-140-63	s	TRANSISTOR 2SA1611-M5M6
Q4	8-729-117-72	s	TRANSISTOR 2SC4178
Q5	8-729-117-72	s	TRANSISTOR 2SC4178
Q301	8-729-140-63	s	TRANSISTOR 2SA1611-M5M6
Q302	8-729-117-32	s	TRANSISTOR 2SC4177
Q303	8-729-905-18	s	TRANSISTOR DTC144EU
Q304	8-729-117-32	s	TRANSISTOR 2SC4177
Q305	8-729-117-32	s	TRANSISTOR 2SC4177
Q306	8-729-117-72	s	TRANSISTOR 2SC4178
R1	1-216-073-00	s	METAL, CHIP 10K 5% 1/10W
R2	1-216-073-00	s	METAL, CHIP 10K 5% 1/10W
R3	1-216-675-11	s	METAL, CHIP 10K 0.5% 1/10W
R4	1-216-675-11	s	METAL, CHIP 10K 0.5% 1/10W
R5	1-216-073-00	s	METAL, CHIP 10K 5% 1/10W
R6	1-216-675-11	s	METAL, CHIP 10K 0.5% 1/10W
R7	1-216-675-11	s	METAL, CHIP 10K 0.5% 1/10W
R8	1-216-073-00	s	METAL, CHIP 10K 5% 1/10W
R9	1-216-675-11	s	METAL, CHIP 10K 0.5% 1/10W
R10	1-216-675-11	s	METAL, CHIP 10K 0.5% 1/10W
R11	1-216-073-00	s	METAL, CHIP 10K 5% 1/10W
R12	1-216-073-00	s	METAL, CHIP 10K 5% 1/10W
R13	1-216-097-00	s	METAL, CHIP 100K 5% 1/10W
R14	1-216-097-00	s	METAL, CHIP 100K 5% 1/10W
R15	1-216-073-00	s	METAL, CHIP 10K 5% 1/10W
R16	1-216-097-00	s	METAL, CHIP 100K 5% 1/10W
R17	1-216-089-00	s	METAL, CHIP 47K 5% 1/10W
R18	1-216-089-00	s	METAL, CHIP 47K 5% 1/10W
R19	1-216-049-00	s	METAL, CHIP 1K 5% 1/10W
R21	1-216-089-00	s	METAL, CHIP 47K 5% 1/10W
R22	1-216-073-00	s	METAL, CHIP 10K 5% 1/10W
R23	1-216-031-00	s	METAL, CHIP 180 5% 1/10W
R24	1-216-097-00	s	METAL, CHIP 100K 5% 1/10W
R25	1-216-097-00	s	METAL, CHIP 100K 5% 1/10W
R26	1-216-097-00	s	METAL, CHIP 100K 5% 1/10W
R27	1-216-097-00	s	METAL, CHIP 100K 5% 1/10W
R28	1-216-097-00	s	METAL, CHIP 100K 5% 1/10W
R29	1-216-097-00	s	METAL, CHIP 100K 5% 1/10W
R30	1-216-097-00	s	METAL, CHIP 100K 5% 1/10W
R31	1-216-097-00	s	METAL, CHIP 100K 5% 1/10W
R32	1-216-073-00	s	METAL, CHIP 10K 5% 1/10W
R33	1-216-073-00	s	METAL, CHIP 10K 5% 1/10W
R34	1-216-073-00	s	METAL, CHIP 10K 5% 1/10W
R35	1-216-073-00	s	METAL, CHIP 10K 5% 1/10W
R36	1-216-073-00	s	METAL, CHIP 10K 5% 1/10W
R37	1-216-073-00	s	METAL, CHIP 10K 5% 1/10W
R38	1-216-089-00	s	METAL, CHIP 47K 5% 1/10W
R39	1-216-049-00	s	METAL, CHIP 1K 5% 1/10W
R40	1-216-089-00	s	METAL, CHIP 47K 5% 1/10W
R41	1-216-089-00	s	METAL, CHIP 47K 5% 1/10W
R42	1-216-089-00	s	METAL, CHIP 47K 5% 1/10W
R43	1-216-073-00	s	METAL, CHIP 10K 5% 1/10W
R46	1-216-049-00	s	METAL, CHIP 1K 5% 1/10W
R51	1-215-057-00	s	METAL, CHIP 2.2K 5% 1/10W
R52	1-216-655-11	s	METAL, CHIP 1.5K 0.5% 1/10W

(DT-28 BOARD)

Ref. No. or Q'ty	Part No.	SP	Description
R53	1-216-632-11	s	METAL, CHIP 16G 0.5% 1/10W
R54	1-216-655-11	s	METAL, CHIP 1.5K 0.5% 1/10W
R55	1-216-057-00	s	METAL, CHIP 2.2K 5% 1/10W
R56	1-216-057-00	s	METAL, CHIP 2.2K 5% 1/10W
R57	1-216-049-00	s	METAL, CHIP 1K 5% 1/10W
R101	1-216-049-00	s	METAL, CHIP 1K 5% 1/10W
R102	1-216-049-00	s	METAL, CHIP 1K 5% 1/10W
R103	1-216-049-00	s	METAL, CHIP 1K 5% 1/10W
R104	1-216-049-00	s	METAL, CHIP 1K 5% 1/10W
R105	1-216-049-00	s	METAL, CHIP 1K 5% 1/10W
R108	1-216-049-00	s	METAL, CHIP 1K 5% 1/10W
R109	1-216-049-00	s	METAL, CHIP 1K 5% 1/10W
R110	1-216-049-00	s	METAL, CHIP 1K 5% 1/10W
R111	1-216-049-00	s	METAL, CHIP 1K 5% 1/10W
R112	1-216-089-00	s	METAL, CHIP 47K 5% 1/10W
R113	1-216-089-00	s	METAL, CHIP 47K 5% 1/10W
R114	1-216-049-00	s	METAL, CHIP 1K 5% 1/10W
R115	1-216-049-00	s	METAL, CHIP 1K 5% 1/10W
R116	1-216-089-00	s	METAL, CHIP 47K 5% 1/10W
R117	1-216-089-00	s	METAL, CHIP 47K 5% 1/10W
R118	1-216-049-00	s	METAL, CHIP 1K 5% 1/10W
R119	1-216-049-00	s	METAL, CHIP 1K 5% 1/10W
R120	1-216-089-00	s	METAL, CHIP 47K 5% 1/10W
R121	1-216-049-00	s	METAL, CHIP 1K 5% 1/10W
R124	1-216-089-00	s	METAL, CHIP 47K 5% 1/10W
R125	1-216-049-00	s	METAL, CHIP 1K 5% 1/10W
R128	1-216-089-00	s	METAL, CHIP 47K 5% 1/10W
R129	1-216-049-00	s	METAL, CHIP 1K 5% 1/10W
R130	1-216-089-00	s	METAL, CHIP 47K 5% 1/10W
R131	1-216-049-00	s	METAL, CHIP 1K 5% 1/10W
R201	1-216-089-00	s	METAL, CHIP 47K 5% 1/10W
R202	1-216-073-00	s	METAL, CHIP 10K 5% 1/10W
R203	1-216-073-00	s	METAL, CHIP 10K 5% 1/10W
R204	1-216-073-00	s	METAL, CHIP 10K 5% 1/10W
R205	1-216-748-11	s	METAL, CHIP 39K 1% 1/10W
R206	1-216-049-00	s	METAL, CHIP 1K 5% 1/10W
R207	1-216-057-00	s	METAL, CHIP 2.2K 5% 1/10W
R208	1-216-049-00	s	METAL, CHIP 1K 5% 1/10W
R209	1-216-049-00	s	METAL, CHIP 1K 5% 1/10W
R210	1-216-049-00	s	METAL, CHIP 1K 5% 1/10W
R211	1-216-049-00	s	METAL, CHIP 1K 5% 1/10W
R212	1-216-057-00	s	METAL, CHIP 2.2K 5% 1/10W
R213	1-216-748-11	s	METAL, CHIP 39K 1% 1/10W
R214	1-216-073-00	s	METAL, CHIP 10K 5% 1/10W
R215	1-216-089-00	s	METAL, CHIP 47K 5% 1/10W
R216	1-216-049-00	s	METAL, CHIP 1K 5% 1/10W
R217	1-216-049-00	s	METAL, CHIP 1K 5% 1/10W
R218	1-216-073-00	s	METAL, CHIP 10K 5% 1/10W
R219	1-216-059-00	s	METAL, CHIP 2.7K 5% 1/10W
R220	1-216-105-00	s	METAL, CHIP 220K 5% 1/10W
R221	1-216-097-00	s	METAL, CHIP 100K 5% 1/10W
R226	1-216-049-00	s	METAL, CHIP 1K 5% 1/10W
R227	1-216-073-00	s	METAL, CHIP 10K 5% 1/10W
R228	1-216-089-00	s	METAL, CHIP 47K 5% 1/10W
R229	1-216-676-11	s	METAL, CHIP 11K 0.5% 1/10W
R230	1-216-059-00	s	METAL, CHIP 2.7K 5% 1/10W
R231	1-216-105-00	s	METAL, CHIP 220K 5% 1/10W
R232	1-216-079-00	s	METAL, CHIP 18K 5% 1/10W
R233	1-216-075-00	s	METAL, CHIP 12K 5% 1/10W

(DT-28 BOARD)

Ref. No. or Q'ty	Part No.	SP	Description
R234	1-216-079-00	s	METAL, CHIP 18K 5% 1/10W
R235	1-216-688-11	s	METAL, CHIP 36K 0.5% 1/10W
R236	1-216-667-11	s	METAL, CHIP 4.7K 0.5% 1/10W
R237	1-216-041-00	s	METAL, CHIP 470 5% 1/10W
R238	1-216-089-00	s	METAL, CHIP 47K 5% 1/10W
R239	1-216-073-00	s	METAL, CHIP 10K 5% 1/10W
R240	1-216-073-00	s	METAL, CHIP 10K 5% 1/10W
R241	1-216-073-00	s	METAL, CHIP 10K 5% 1/10W
R242	1-216-073-00	s	METAL, CHIP 10K 5% 1/10W
R243	1-216-089-00	s	METAL, CHIP 47K 5% 1/10W
R244	1-216-073-00	s	METAL, CHIP 10K 5% 1/10W
R245	1-216-073-00	s	METAL, CHIP 10K 5% 1/10W
R246	1-216-073-00	s	METAL, CHIP 10K 5% 1/10W
R247	1-216-748-11	s	METAL, CHIP 39K 1% 1/10W
R248	1-216-049-00	s	METAL, CHIP 1K 5% 1/10W
R249	1-216-057-00	s	METAL, CHIP 2.2K 5% 1/10W
R250	1-216-049-00	s	METAL, CHIP 1K 5% 1/10W
R251	1-216-049-00	s	METAL, CHIP 1K 5% 1/10W
R252	1-216-049-00	s	METAL, CHIP 1K 5% 1/10W
R253	1-216-049-00	s	METAL, CHIP 1K 5% 1/10W
R254	1-216-057-00	s	METAL, CHIP 2.2K 5% 1/10W
R255	1-216-748-11	s	METAL, CHIP 39K 1% 1/10W
R256	1-216-073-00	s	METAL, CHIP 10K 5% 1/10W
R257	1-215-089-00	s	METAL, CHIP 47K 5% 1/10W
R258	1-216-049-00	s	METAL, CHIP 1K 5% 1/10W
R259	1-216-049-00	s	METAL, CHIP 1K 5% 1/10W
R260	1-216-073-00	s	METAL, CHIP 10K 5% 1/10W
R261	1-216-059-00	s	METAL, CHIP 2.7K 5% 1/10W
R262	1-216-105-00	s	METAL, CHIP 220K 5% 1/10W
R263	1-216-097-00	s	METAL, CHIP 100K 5% 1/10W
R268	1-216-049-00	s	METAL, CHIP 1K 5% 1/10W
R269	1-216-073-00	s	METAL, CHIP 10K 5% 1/10W
R270	1-216-089-00	s	METAL, CHIP 47K 5% 1/10W
R271	1-216-676-11	s	METAL, CHIP 11K 0.5% 1/10W
R272	1-216-059-00	s	METAL, CHIP 2.7K 5% 1/10W
R273	1-216-105-00	s	METAL, CHIP 220K 5% 1/10W
R274	1-216-079-00	s	METAL, CHIP 18K 5% 1/10W
R275	1-216-075-00	s	METAL, CHIP 12K 5% 1/10W
R276	1-216-079-00	s	METAL, CHIP 18K 5% 1/10W
R277	1-216-688-11	s	METAL, CHIP 36K 0.5% 1/10W
R278	1-216-667-11	s	METAL, CHIP 4.7K 0.5% 1/10W
R279	1-216-041-00	s	METAL, CHIP 470 5% 1/10W
R280	1-216-089-00	s	METAL, CHIP 47K 5% 1/10W
R281	1-216-073-00	s	METAL, CHIP 10K 5% 1/10W
R282	1-216-073-00	s	METAL, CHIP 10K 5% 1/10W
R283	1-216-073-00	s	METAL, CHIP 10K 5% 1/10W
R284	1-216-073-00	s	METAL, CHIP 10K 5% 1/10W
R285	1-216-073-00	s	METAL, CHIP 10K 5% 1/10W
R286	1-216-073-00	s	METAL, CHIP 10K 5% 1/10W
R287	1-216-097-00	s	METAL, CHIP 100K 5% 1/10W
R288	1-216-049-00	s	METAL, CHIP 1K 5% 1/10W
R289	1-216-073-00	s	METAL, CHIP 10K 5% 1/10W
R290	1-216-073-00	s	METAL, CHIP 10K 5% 1/10W
R291	1-216-097-00	s	METAL, CHIP 100K 5% 1/10W
R292	1-216-049-00	s	METAL, CHIP 1K 5% 1/10W
R293	1-216-049-00	s	METAL, CHIP 1K 5% 1/10W
R294	1-216-049-00	s	METAL, CHIP 1K 5% 1/10W
R301	1-216-097-00	s	METAL, CHIP 100K 5% 1/10W
R302	1-216-097-00	s	METAL, CHIP 100K 5% 1/10W

(DT-28 BOARD)

Ref. No. or Q'ty	Part No.	SP	Description
R303	1-216-089-00	s	METAL, CHIP 47K 5% 1/10W
R304	1-216-049-00	s	METAL, CHIP 1K 5% 1/10W
R305	1-216-049-00	s	METAL, CHIP 1K 5% 1/10W
R315	1-216-027-00	s	METAL, CHIP 120 5% 1/10W
R316	1-216-049-00	s	METAL, CHIP 1K 5% 1/10W
R317	1-216-065-00	s	METAL, CHIP 4.7K 5% 1/10W
R318	1-216-049-00	s	METAL, CHIP 1K 5% 1/10W
R319	1-216-043-00	s	METAL, CHIP 560 5% 1/10W
R320	1-216-049-00	s	METAL, CHIP 1K 5% 1/10W
R321	1-216-101-00	s	METAL, CHIP 150K 5% 1/10W
R322	1-216-075-00	s	METAL, CHIP 12K 5% 1/10W
R323	1-218-113-00	s	METAL, CHIP 470K 5% 1/10W
R324	1-216-049-00	s	METAL, CHIP 1K 5% 1/10W
R325	1-216-087-00	s	METAL, CHIP 5.6K 5% 1/10W
R326	1-216-087-00	s	METAL, CHIP 5.6K 5% 1/10W
R327	1-216-049-00	s	METAL, CHIP 1K 5% 1/10W
R328	1-216-061-00	s	METAL, CHIP 3.3K 5% 1/10W
R329	1-216-017-00	s	METAL, CHIP 47 5% 1/10W
R330	1-216-049-00	s	METAL, CHIP 1K 5% 1/10W
R331	1-216-097-00	s	METAL, CHIP 100K 5% 1/10W
R332	1-216-049-00	s	METAL, CHIP 1K 5% 1/10W
R333	1-216-049-00	s	METAL, CHIP 1K 5% 1/10W
R334	1-216-081-00	s	METAL, CHIP 22K 5% 1/10W
R335	1-216-081-00	s	METAL, CHIP 22K 5% 1/10W
R336	1-216-061-00	s	METAL, CHIP 3.3K 5% 1/10W
R337	1-216-638-11	s	METAL, CHIP 30Ω 0.5% 1/10W
R338	1-216-638-11	s	METAL, CHIP 30Ω 0.5% 1/10W
R339	1-216-081-00	s	METAL, CHIP 22K 5% 1/10W
R340	1-216-081-00	s	METAL, CHIP 22K 5% 1/10W
S1	1-554-303-21	s	SWITCH, TACTILE
S2	1-571-967-11	s	SWITCH, DIP 8-CKT
X1	1-577-121-11	s	CRYSTAL 20.000MHz
X101	1-577-121-11	s	CRYSTAL 20.000MHz

DT-29 BOARD

Ref. No. or Q'ty	Part No.	SP	Description
1pc	A-6715-456-A	o	MOUNTED CIRCUIT BOARD, DT-29
1pc	3-172-469-01	o	CASE (A), DT SHIELD
1pc	3-172-470-01	o	CASE (B), DT SHIELD
2pcs	1-533-217-31	s	HOLDER, FUSE
2pcs	4-812-134-11	s	RIVET NYLON, 3.5
C1	1-163-809-11	s	CERAMIC, CHIP 0.047uF 10% 25V
C2	1-126-103-11	s	ELECT 470uF 20% 16V
C3	1-126-103-11	s	ELECT 470uF 20% 16V
C4	1-126-103-11	s	ELECT 470uF 20% 16V
C5	1-126-103-11	s	ELECT 470uF 20% 16V
C6	1-126-103-11	s	ELECT 470uF 20% 16V
C8	1-124-903-11	s	ELECT 1uF 20% 50V
C9	1-136-200-11	s	FILM 0.15uF 5% 400V
C10	1-136-200-11	s	FILM 0.15uF 5% 400V
C11	1-136-200-11	s	FILM 0.15uF 5% 400V
C12	1-136-200-11	s	FILM 0.15uF 5% 400V
C13	1-136-200-11	s	FILM 0.15uF 5% 400V
C14	1-136-200-11	s	FILM 0.15uF 5% 400V
C15	1-130-491-00	s	MYLAR 0.047uF 5% 50V
C16	1-130-491-00	s	MYLAR 0.047uF 5% 50V
C17	1-163-017-00	s	CERAMIC, CHIP 0.0047uF 5% 50V
C18	1-163-251-11	s	CERAMIC, CHIP 100PF 5% 50V
C19	1-124-667-11	s	ELECT 10 20% 100V
C20	1-163-251-11	s	CERAMIC, CHIP 100PF 5% 50V
C21	1-124-667-11	s	ELECT 10 20% 100V
C22	1-163-017-00	s	CERAMIC, CHIP 0.0047uF 5% 50V
C23	1-163-017-00	s	CERAMIC, CHIP 0.0047uF 5% 50V
C24	1-163-017-00	s	CERAMIC, CHIP 0.0047uF 5% 50V
C31	1-126-101-11	s	ELECT 100uF 20% 16V
C32	1-126-101-11	s	ELECT 100uF 20% 16V
C33	1-124-667-11	s	ELECT 10 20% 100V
C34	1-124-667-11	s	ELECT 10 20% 100V
CN390	1-506-476-11	s	CONNECTOR, 11P, MALE
CN391	1-506-473-11	s	CONNECTOR, 8P, MALE
D1	8-719-926-76	s	DIODE 1S2076TP1
D2	8-719-300-33	s	DIODE RU-3AM
D3	8-719-300-33	s	DIODE RU-3AM
D4	8-719-300-33	s	DIODE RU-3AM
D5	8-719-300-33	s	DIODE RU-3AM
D6	8-719-123-85	s	DIODE 1SS304
D7	8-719-800-76	s	DIODE 1SS226
D8	8-719-800-76	s	DIODE 1SS226
D9	8-719-123-82	s	DIODE 1SS303-T1
D11	8-719-123-82	s	DIODE 1SS303-T1
D12	8-719-800-76	s	DIODE 1SS226
D13	8-719-800-76	s	DIODE 1SS226
F1	⚠ 1-532-078-00	s	FUSE 1A 250V
IC1	8-759-908-17	s	IC TL082CPS
IC2	8-759-908-17	s	IC TL082CPS
IC3	8-759-908-17	s	IC TL082CPS
IC4	8-759-908-17	s	IC TL082CPS
IC5	8-759-925-05	s	IC LM2903PS
IC6	8-759-929-26	s	IC TL431CPS
L1	1-412-533-11	s	INDUCTOR 47uH
L2	1-412-533-11	s	INDUCTOR 47uH
L3	1-410-093-11	s	INDUCTOR 33mH

(DT-29 BOARD)

Ref. No. or Q'ty	Part No.	SP	Description
L4	1-410-093-11	s	INDUCTOR 33mH
L5	1-410-093-11	s	INDUCTOR 33mH
L6	1-410-093-11	s	INDUCTOR 33mH
L7	1-412-533-11	s	INDUCTOR 47uH
L8	1-412-533-11	s	INDUCTOR 47uH
Q1	8-729-101-68	s	TRANSISTOR 2SC2654
Q2	8-729-101-68	s	TRANSISTOR 2SC2654
Q3	8-729-105-97	s	TRANSISTOR 2SA1156-2K
Q4	8-729-141-78	s	TRANSISTOR 2SC3632-K
Q5	8-729-141-78	s	TRANSISTOR 2SC3632-K
Q6	8-729-209-07	s	TRANSISTOR 2SC4213-B
Q7	8-729-140-63	s	TRANSISTOR 2SA1611-M5M6
Q8	8-729-118-43	s	TRANSISTOR 2SA1413-L
Q9	8-729-105-97	s	TRANSISTOR 2SA1156-2K
Q10	8-729-141-78	s	TRANSISTOR 2SC3632-K
Q11	8-729-141-78	s	TRANSISTOR 2SC3632-K
Q12	8-729-209-07	s	TRANSISTOR 2SC4213-B
Q13	8-729-140-63	s	TRANSISTOR 2SA1611-M5M6
Q14	8-729-118-43	s	TRANSISTOR 2SA1413-L
Q15	8-729-106-68	s	TRANSISTOR 2SD1615A-GP
R1	1-216-311-00	s	METAL 6.8 5% 1/10W
R2	1-216-025-00	s	METAL, CHIP 100 5% 1/10W
R3	1-216-311-00	s	METAL 6.8 5% 1/10W
R4	1-216-049-00	s	METAL, CHIP 1K 5% 1/10W
R5	1-216-691-11	s	METAL, CHIP 47K 0.5% 1/10W
R6	1-216-667-11	s	METAL, CHIP 4.7K 0.5% 1/10W
R7	1-216-675-11	s	METAL, CHIP 10K 0.5% 1/10W
R8	⚠ 1-214-925-00	s	METAL 470K 1% 1/2W
R9	1-216-065-00	s	METAL, CHIP 4.7K 5% 1/10W
R10	1-216-065-00	s	METAL, CHIP 4.7K 5% 1/10W
R11	1-216-073-00	s	METAL, CHIP 10K 5% 1/10W
R12	⚠ 1-214-924-00	s	METAL 300K 1% 1/2W
R13	1-216-081-00	s	METAL, CHIP 22K 5% 1/10W
R14	⚠ 1-260-124-11	s	CARBON 120K 5% 1/2W
R15	⚠ 1-260-124-11	s	CARBON 120K 5% 1/2W
R16	1-216-013-00	s	METAL, CHIP 33 5% 1/10W
R17	1-216-013-00	s	METAL, CHIP 33 5% 1/10W
R18	⚠ 1-260-102-11	s	CARBON 1.8K 5% 1/2W
R19	1-215-493-00	s	METAL 1M 1% 1/6W
R20	1-215-493-00	s	METAL 1M 1% 1/6W
R21	1-216-697-11	s	METAL, CHIP 82K 0.5% 1/10W
R22	1-216-073-00	s	METAL, CHIP 10K 5% 1/10W
R23	1-216-675-11	s	METAL, CHIP 10K 0.5% 1/10W
R24	1-216-675-11	s	METAL, CHIP 10K 0.5% 1/10W
R27	1-216-073-00	s	METAL, CHIP 10K 5% 1/10W
R28	⚠ 1-260-124-11	s	CARBON 120K 5% 1/2W
R29	⚠ 1-260-124-11	s	CARBON 120K 5% 1/2W
R30	1-216-013-00	s	METAL, CHIP 33 5% 1/10W
R31	1-215-493-00	s	METAL 1M 1% 1/6W
R32	1-215-493-00	s	METAL 1M 1% 1/6W
R33	⚠ 1-260-102-11	s	CARBON 1.8K 5% 1/2W
R34	1-216-697-11	s	METAL, CHIP 82K 0.5% 1/10W
R35	1-216-691-11	s	METAL, CHIP 47K 0.5% 1/10W
R36	1-216-667-11	s	METAL, CHIP 4.7K 0.5% 1/10W
R37	1-216-675-11	s	METAL, CHIP 10K 0.5% 1/10W
R38	⚠ 1-214-928-00	s	METAL 470K 1% 1/2W
R39	1-216-065-00	s	METAL, CHIP 4.7K 5% 1/10W
R40	1-216-065-00	s	METAL, CHIP 4.7K 5% 1/10W
R41	1-216-073-00	s	METAL, CHIP 10K 5% 1/10W

(DT-29 BOARD)

Ref. No. or Q'ty	Part No.	SP	Description
R42	1-216-081-00	s	METAL, CHIP 22K 5% 1/10W
R43 ⚠	1-214-924-00	s	METAL 300K 1% 1/2W
R44	1-216-013-00	s	METAL, CHIP 33 5% 1/10W
R45	1-216-121-00	s	METAL, CHIP 1M 5% 1/10W
R46	1-216-107-00	s	METAL, CHIP 270K 5% 1/10W
R47	1-216-073-00	s	METAL, CHIP 10K 5% 1/10W
R48	1-216-121-00	s	METAL, CHIP 1M 5% 1/10W
R49	1-216-107-00	s	METAL, CHIP 270K 5% 1/10W
R50	1-216-073-00	s	METAL, CHIP 10K 5% 1/10W
R51	1-216-091-00	s	METAL, CHIP 56K 5% 1/10W
R52	1-216-694-11	s	METAL, CHIP 62K 0.5% 1/10W
R53	1-216-686-11	s	METAL, CHIP 30K 0.5% 1/10W
R54	1-216-049-00	s	METAL, CHIP 1K 5% 1/10W
T1	1-448-937-11	s	TRANSFORMER, CONVERTER

DUS-359 BOARD

Ref. No. or Q'ty	Part No.	SP	Description
This board is included in the DIF-11P board.			
1pc	1-641-371-11	s	PRINTED CIRCUIT BOARD, DUS-359
IC1001	8-759-982-04	s	IC RC5532M
IC2001	8-759-982-04	s	IC RC5532M
R1001	1-216-675-11	s	METAL, CHIP 10K 0.5% 1/10W
R1003	1-216-675-11	s	METAL, CHIP 10K 0.5% 1/10W
R1004	1-216-657-11	s	METAL, CHIP 1.8K 0.5% 1/10W
R1006	1-216-675-11	s	METAL, CHIP 10K 0.5% 1/10W
R1007	1-216-675-11	s	METAL, CHIP 10K 0.5% 1/10W
R1008	1-216-657-11	s	METAL, CHIP 1.8K 0.5% 1/10W
R2001	1-216-675-11	s	METAL, CHIP 10K 0.5% 1/10W
R2003	1-216-675-11	s	METAL, CHIP 10K 0.5% 1/10W
R2004	1-216-657-11	s	METAL, CHIP 1.8K 0.5% 1/10W
R2005	1-216-675-11	s	METAL, CHIP 10K 0.5% 1/10W
R2007	1-216-675-11	s	METAL, CHIP 10K 0.5% 1/10W
R2008	1-216-657-11	s	METAL, CHIP 1.8K 0.5% 1/10W

DUS-465 BOARD

Ref. No. or Q'ty	Part No.	SP	Description
This board is included in the AU-147P board.			
1pc	1-237-039-11	s	RES, ADJ, METAL 100K

DUS-475 BOARD

Ref. No. or Q'ty	Part No.	SP	Description
This board is included in the AU-147P board.			
Q121	8-729-905-18	s	TRANSISTOR DTC144EU
Q122	8-729-905-12	s	TRANSISTOR DTA144EU
Q221	8-729-905-18	s	TRANSISTOR DTC144EU
Q222	8-729-905-12	s	TRANSISTOR DTA144EU

DUS-490 BOARD

Ref. No. or Q'ty	Part No.	SP	Description
This board is included in the DIF-11P board.			
1pc	1-641-889-11	o	PRINTED CIRCUIT BOARD, DUS-490
C91	1-164-004-11	s	CERAMIC, CHIP 0.1uF 10% 25V
C92	1-164-004-11	s	CERAMIC, CHIP 0.1uF 10% 25V
C93	1-163-243-11	s	CERAMIC, CHIP 47PF 5% 50V
Q91	8-729-143-46	s	TRANSISTOR 2SC3356-R24
R91	1-216-623-11	s	METAL, CHIP 68 0.5% 1/10W
R92	1-216-635-11	s	METAL, CHIP 220 0.5% 1/10W
R93	1-216-611-11	s	METAL, CHIP 22 0.5% 1/10W
R94	1-216-624-11	s	METAL, CHIP 75 0.5% 1/10W

EX-286 BOARD

Ref. No. or Q'ty	Part No.	SP	Description
1pc	A-6768-389-A	o	MOUNTED CIRCUIT BOARD, EX-286
4pcs	7-621-775-20	s	SCREW +B 2.6X5
4pcs	7-682-947-01	s	SCREW +PSW 3X6
1pc	3-173-410-01	o	PLATE (EX), SHIELD CASE
1pc	7-621-759-35	s	+PSW, 2.6X5
1pc	7-682-947-01	s	SCREW +PSW 3X6
1pc	7-621-759-35	s	+PSW, 2.6X5
1pc	7-682-947-01	s	SCREW +PSW 3X6
1pc	7-621-759-35	s	+PSW, 2.6X5
1pc	7-682-947-01	s	SCREW +PSW 3X6
1pc	7-621-759-35	s	+PSW, 2.6X5
1pc	7-682-947-01	s	SCREW +PSW 3X6
4pcs	7-621-759-35	s	+PSW, 2.6X5
CN1	1-573-600-21	s	CONNECTOR, PHEC 100P, MALE
CN2	1-573-600-21	s	CONNECTOR, PHEC 100P, MALE
CN3	1-573-600-21	s	CONNECTOR, PHEC 100P, MALE
CN4	1-580-195-21	s	CONNECTOR, PHEC 100P, FEMALE
CN5	1-580-195-21	s	CONNECTOR, PHEC 100P, FEMALE
CN6	1-580-195-21	s	CONNECTOR, PHEC 100P, FEMALE

EX-347 BOARD

Ref. No. or Q'ty	Part No.	SP	Description
1pc	A-6766-390-A	o	MOUNTED CIRCUIT BOARD, EX-347
4pcs	7-621-775-20	s	SCREW +B 2.6X5
CN1	1-573-782-21	o	CONNECTOR, PHEC 60P, MALE
CN2	1-573-782-21	o	CONNECTOR, PHEC 60P, MALE
CN3	1-573-783-21	o	CONNECTOR, PHEC 60P, FEMALE
CN4	1-573-783-21	o	CONNECTOR, PHEC 60P, FEMALE

HP-47 BOARD

Ref. No. or Q'ty	Part No.	SP	Description
1pc	A-6713-465-A	o	MOUNTED CIRCUIT BOARD, HP-47
C1	1-124-477-11	s	ELECT 47uF 20% 25V
C2	1-124-477-11	s	ELECT 47uF 20% 25V
C5	1-130-495-00	s	MYLAR 0.1uF 5% 50V
C21	1-126-101-11	s	ELECT 100uF 20% 16V
C22	1-126-101-11	s	ELECT 100uF 20% 16V
C31	1-124-477-11	s	ELECT 47uF 20% 25V
C32	1-124-477-11	s	ELECT 47uF 20% 25V
C33	1-124-477-11	s	ELECT 47uF 20% 25V
C34	1-124-477-11	s	ELECT 47uF 20% 25V
C35	1-163-037-11	s	CERAMIC, CHIP 0.022uF 10% 25V
C36	1-163-037-11	s	CERAMIC, CHIP 0.022uF 10% 25V
CN508	1-580-535-11	o	CONNECTOR, LY 12P, MALE
CN509	1-506-468-11	s	CONNECTOR, 3P, MALE
IC1	8-759-109-70	s	IC UPC4560G2
IC2	8-759-982-04	s	IC RC5532M
J1	1-507-863-51	s	JACK, PHONE
Q1	8-729-209-07	s	TRANSISTOR 2SC4213-B
Q2	8-729-209-07	s	TRANSISTOR 2SC4213-B
Q31	8-729-159-65	s	TRANSISTOR 2SD596-DV5
Q32	8-729-141-48	s	TRANSISTOR 2SB624-BV345
R1	1-216-649-11	s	METAL, CHIP 820 0.5% 1/10W
R2	1-216-671-11	s	METAL, CHIP 6.8K 0.5% 1/10W
R3	1-216-673-11	s	METAL, CHIP 8.2K 0.5% 1/10W
R4	1-216-029-00	s	METAL, CHIP 150 5% 1/10W
R5	1-216-649-11	s	METAL, CHIP 820 0.5% 1/10W
R6	1-216-671-11	s	METAL, CHIP 6.8K 0.5% 1/10W
R7	1-216-673-11	s	METAL, CHIP 8.2K 0.5% 1/10W
R8	1-216-029-00	s	METAL, CHIP 150 5% 1/10W
R9	1-216-081-00	s	METAL, CHIP 22K 5% 1/10W
R10	1-216-081-00	s	METAL, CHIP 22K 5% 1/10W
R11	1-216-073-00	s	METAL, CHIP 10K 5% 1/10W
R12	1-216-073-00	s	METAL, CHIP 10K 5% 1/10W
R21	1-249-409-11	s	CARBON 220 5% 1/4W
R22	1-249-409-11	s	CARBON 220 5% 1/4W
R23	1-249-409-11	s	CARBON 220 5% 1/4W
R24	1-249-409-11	s	CARBON 220 5% 1/4W
R31	1-216-053-00	s	METAL, CHIP 1.5K 5% 1/10W
R32	1-216-053-00	s	METAL, CHIP 1.5K 5% 1/10W
RV1	1-241-577-11	s	RES, VAR CARBON 20K/20K

KV-188D BOARD

Ref. No. or Q'ty	Part No.	SP	Description
This board includes the DP-136, KV-205, KV-206 and PT-9 boa			
1pc	A-6717-633-A	o	MOUNTED CIRCUIT BOARD, KV-188D
1pc	1-690-263-11	o	CABLE, FLAT 10P
1pc	3-172-446-01	o	BRACKET, PT
1pc	3-659-487-00	s	HOLDER, BUZER
1pc	3-659-488-00	s	PIN, BUZER HOLDER
1pc	3-660-978-00	s	SHEET, HEAT RESISTING
1pc	3-668-904-00	o	HOLDER, PT
1pc	7-621-759-75	s	+PSW, 2.6X10
1pc	7-682-947-01	s	SCREW +PSW 3X6
6pcs	3-305-651-11	s	RETAINER, LED
4pcs	3-668-124-00	o	HOLDER, LED
C1	1-124-252-00	s	ELECT 0.33uF 20% 50V
C2	1-124-252-00	s	ELECT 0.33uF 20% 50V
C3	1-161-039-00	s	CERAMIC 0.001uF 10% 50V
C4	1-126-176-11	s	ELECT 220uF 20% 10V
C5	1-161-055-00	s	CERAMIC 0.022uF 10% 50V
C6	1-126-176-11	s	ELECT 220uF 20% 10V
C7	1-161-055-00	s	CERAMIC 0.022uF 10% 50V
C8	1-161-055-00	s	CERAMIC 0.022uF 10% 50V
C9	1-161-055-00	s	CERAMIC 0.022uF 10% 50V
C10	1-161-055-00	s	CERAMIC 0.022uF 10% 50V
C11	1-161-055-00	s	CERAMIC 0.022uF 10% 50V
C12	1-161-055-00	s	CERAMIC 0.022uF 10% 50V
C13	1-126-157-11	s	ELECT 10uF 20% 16V
C14	1-107-977-00	s	MICA 47PF 5% 50V
C16	1-107-158-00	s	MICA 30PF 5% 500V
C17	1-107-158-00	s	MICA 30PF 5% 500V
C18	1-126-176-11	s	ELECT 220uF 20% 10V
C19	1-126-176-11	s	ELECT 220uF 20% 10V
C20	1-126-157-11	s	ELECT 10uF 20% 16V
C21	1-126-157-11	s	ELECT 10uF 20% 16V
C22	1-126-157-11	s	ELECT 10uF 20% 16V
C23	1-126-157-11	s	ELECT 10uF 20% 16V
C24	1-126-157-11	s	ELECT 10uF 20% 16V
C25	1-126-157-11	s	ELECT 10uF 20% 16V
C26	1-126-157-11	s	ELECT 10uF 20% 16V
C27	1-126-157-11	s	ELECT 10uF 20% 16V
C28	1-126-157-11	s	ELECT 10uF 20% 16V
C29	1-126-157-11	s	ELECT 10uF 20% 16V
C30	1-126-157-11	s	ELECT 10uF 20% 16V
C31	1-126-157-11	s	ELECT 10uF 20% 16V
C32	1-126-157-11	s	ELECT 10uF 20% 16V
C33	1-126-157-11	s	ELECT 10uF 20% 16V
C34	1-126-157-11	s	ELECT 10uF 20% 16V
C35	1-126-157-11	s	ELECT 10uF 20% 16V
C36	1-126-157-11	s	ELECT 10uF 20% 15V
C37	1-126-157-11	s	ELECT 10uF 20% 16V
C38	1-126-157-11	s	ELECT 10uF 20% 16V
C39	1-126-157-11	s	ELECT 10uF 20% 16V
C40	1-126-157-11	s	ELECT 10uF 20% 16V
C41	1-126-157-11	s	ELECT 10uF 20% 16V
C42	1-126-157-11	s	ELECT 10uF 20% 16V
C43	1-126-157-11	s	ELECT 10uF 20% 16V
C44	1-124-252-00	s	ELECT 0.33uF 20% 50V
C45	1-126-176-11	s	ELECT 220uF 20% 10V
C46	1-126-157-11	s	ELECT 10uF 20% 16V

(KV-188D BOARD)

Ref. No. or Q'ty	Part No.	SP	Description
C90	1-163-117-00	s	CERAMIC, CHIP 100PF 5% 50V
C91	1-163-117-00	s	CERAMIC, CHIP 100PF 5% 50V
C92	1-163-117-00	s	CERAMIC, CHIP 100PF 5% 50V
C93	1-163-117-00	s	CERAMIC, CHIP 100PF 5% 50V
CN2	1-506-485-11	s	CONNECTOR, 6P, MALE
D1	8-719-911-19	s	DIODE 1SS119
D2	8-719-911-19	s	DIODE 1SS119
D3	8-719-911-19	s	DIODE 1SS119
D4	8-719-109-51	s	DIODE RD2.0ES-B2
D5	8-719-109-51	s	DIODE RD2.0ES-B2
D6	8-719-109-51	s	DIODE RD2.0ES-B2
D7	8-719-109-51	s	DIODE RD2.0ES-B2
D8	8-719-109-51	s	DIODE RD2.0ES-B2
D9	8-719-109-51	s	DIODE RD2.0ES-B2
D10	8-719-109-51	s	DIODE RD2.0ES-B2
D11	8-719-911-19	s	DIODE 1SS119
D12	8-719-911-19	s	DIODE 1SS119
D13	8-719-911-19	s	DIODE 1SS119
D14	8-719-911-19	s	DIODE 1SS119
D15	8-719-911-19	s	DIODE 1SS119
D16	8-719-911-19	s	DIODE 1SS119
D17	8-719-911-19	s	DIODE 1SS119
D18	8-719-911-19	s	DIODE 1SS119
D19	8-719-911-19	s	DIODE 1SS119
D20	8-719-911-19	s	DIODE 1SS119
D21	8-719-911-19	s	DIODE 1SS119
D22	8-719-911-19	s	DIODE 1SS119
D23	8-719-911-19	s	DIODE 1SS119
D24	8-719-911-19	s	DIODE 1SS119
D25	8-719-911-19	s	DIODE 1SS119
D26	8-719-911-19	s	DIODE 1SS119
D27	8-719-911-19	s	DIODE 1SS119
D28	8-719-911-19	s	DIODE 1SS119
D29	8-719-911-19	s	DIODE 1SS119
D30	8-719-911-19	s	DIODE 1SS119
D31	8-719-911-19	s	DIODE 1SS119
D32	8-719-911-19	s	DIODE 1SS119
D33	8-719-911-19	s	DIODE 1SS119
D34	8-719-911-19	s	DIODE 1SS119
D35	8-719-911-19	s	DIODE 1SS119
D36	8-719-911-19	s	DIODE 1SS119
D37	8-719-911-19	s	DIODE 1SS119
D38	8-719-911-19	s	DIODE 1SS119
D39	8-719-911-19	s	DIODE 1SS119
D40	8-719-911-19	s	DIODE 1SS119
D41	8-719-911-19	s	DIODE 1SS119
D42	8-719-911-19	s	DIODE 1SS119
D43	8-719-911-19	s	DIODE 1SS119
D44	8-719-911-19	s	DIODE 1SS119
D45	8-719-911-19	s	DIODE 1SS119
D46	8-719-911-19	s	DIODE 1SS119
D47	8-719-911-19	s	DIODE 1SS119
D48	8-719-911-19	s	DIODE 1SS119
D49	8-719-802-11	s	LED TLUG154, GRN
D50	8-719-939-39	s	LED GL5HD8, RED
D51	8-719-939-39	s	LED GL5HD8, RED
D52	8-719-939-39	s	LED GL5HD8, RED
D53	8-719-939-39	s	LED GL5HD8, RED

(KY-188D BOARD)

Ref. No. or Q'ty	Part No.	SP	Description
D55	8-719-939-39	s	LED GL5HD8, RED
D56	8-719-939-39	s	LED GL5HD8, RED
D57	8-719-802-11	s	LED TLDG154, GRN
D58	8-719-939-39	s	LED GL5HD8, RED
D59	8-719-802-11	s	LED TLDG154, GRN
IC1	8-759-632-07	s	IC M5237L
IC2	8-759-982-21	s	IC RC78L05A
IC3	8-759-500-43	s	IC CXD8117P
IC4	8-759-501-52	s	IC M50747E-250SP
IC5	8-759-645-16	s	IC M54516P
IC6	8-759-645-16	s	IC M54516P
IC7	8-759-645-16	s	IC M54516P
IC8	8-759-982-21	s	IC RC78L05A
L1	1-412-533-11	s	INDUCTOR 47uH
L2	1-412-533-11	s	INDUCTOR 47uH
Q2	8-729-275-42	s	TRANSISTOR 2SC2754
Q3	8-729-275-42	s	TRANSISTOR 2SC2754
Q4	8-729-904-51	s	TRANSISTOR DTB123EK
Q5	8-729-904-51	s	TRANSISTOR DTB123EK
Q6	8-729-904-51	s	TRANSISTOR DTB123EK
Q7	8-729-904-51	s	TRANSISTOR DTB123EK
Q8	8-729-904-51	s	TRANSISTOR DTB123EK
Q9	8-729-904-51	s	TRANSISTOR DTB123EK
Q10	8-729-904-51	s	TRANSISTOR DTB123EK
Q12	8-729-140-93	s	TRANSISTOR 2SB733-34
Q13	8-729-140-93	s	TRANSISTOR 2SB733-34
Q14	8-729-140-93	s	TRANSISTOR 2SB733-34
Q15	8-729-140-93	s	TRANSISTOR 2SB733-34
Q16	8-729-140-93	s	TRANSISTOR 2SB733-34
Q17	8-729-140-93	s	TRANSISTOR 2SB733-34
Q18	8-729-140-93	s	TRANSISTOR 2SB733-34
Q19	8-729-140-93	s	TRANSISTOR 2SB733-34
Q20	8-729-900-67	s	TRANSISTOR DTA124XS
Q21	8-729-900-67	s	TRANSISTOR DTA124XS
Q22	8-729-900-67	s	TRANSISTOR DTA124XS
Q23	8-729-900-67	s	TRANSISTOR DTA124XS
Q24	8-729-900-67	s	TRANSISTOR DTA124XS
Q25	8-729-901-02	s	TRANSISTOR DTC124XK
Q26	8-729-901-02	s	TRANSISTOR DTC124XK
Q27	8-729-900-83	s	TRANSISTOR DTC124XS
Q28	8-729-900-83	s	TRANSISTOR DTC124XS
Q29	8-729-901-02	s	TRANSISTOR DTC124XK
Q30	8-729-901-02	s	TRANSISTOR DTC124XK
Q31	8-729-901-02	s	TRANSISTOR DTC124XK
Q32	8-729-901-02	s	TRANSISTOR DTC124XK
Q33	8-729-900-51	s	TRANSISTOR DTA114TK
Q34	8-729-140-75	s	TRANSISTOR 2SD999-CLCK
Q35	8-729-900-51	s	TRANSISTOR DTA114TK
Q36	8-729-140-75	s	TRANSISTOR 2SD999-CLCK
Q37	8-729-900-51	s	TRANSISTOR DTA114TK
Q38	8-729-140-75	s	TRANSISTOR 2SD999-CLCK
Q39	8-729-900-51	s	TRANSISTOR DTA114TK
Q40	8-729-140-75	s	TRANSISTOR 2SD999-CLCK
Q41	8-729-900-51	s	TRANSISTOR DTA114TK
Q42	8-729-140-75	s	TRANSISTOR 2SD999-CLCK
Q43	8-729-900-51	s	TRANSISTOR DTA114TK
Q44	8-729-140-75	s	TRANSISTOR 2SD999-CLCK
Q45	8-729-900-51	s	TRANSISTOR DTA114TK

(KY-188D BOARD)

Ref. No. or Q'ty	Part No.	SP	Description
Q46	8-729-140-75	s	TRANSISTOR 2SD999-CLCK
Q47	8-729-900-51	s	TRANSISTOR DTA114TK
Q48	8-729-140-75	s	TRANSISTOR 2SD999-CLCK
Q49	8-729-900-51	s	TRANSISTOR DTA114TK
Q50	8-729-140-75	s	TRANSISTOR 2SD999-CLCK
Q51	8-729-900-51	s	TRANSISTOR DTA114TK
Q52	8-729-140-75	s	TRANSISTOR 2SD999-CLCK
Q53	8-729-900-51	s	TRANSISTOR DTA114TK
Q54	8-729-140-75	s	TRANSISTOR 2SD999-CLCK
Q55	8-729-900-51	s	TRANSISTOR DTA114TK
Q56	8-729-140-75	s	TRANSISTOR 2SD999-CLCK
Q57	8-729-900-51	s	TRANSISTOR DTA114TK
Q58	8-729-140-75	s	TRANSISTOR 2SD999-CLCK
Q59	8-729-900-51	s	TRANSISTOR DTA114TK
Q60	8-729-140-75	s	TRANSISTOR 2SD999-CLCK
Q61	8-729-900-51	s	TRANSISTOR DTA114TK
Q62	8-729-140-75	s	TRANSISTOR 2SD999-CLCK
Q63	8-729-900-51	s	TRANSISTOR DTA114TK
Q64	8-729-140-75	s	TRANSISTOR 2SD999-CLCK
Q65	8-729-900-51	s	TRANSISTOR DTA114TK
Q66	8-729-140-75	s	TRANSISTOR 2SD999-CLCK
Q67	8-729-900-51	s	TRANSISTOR DTA114TK
Q68	8-729-140-75	s	TRANSISTOR 2SD999-CLCK
Q69	8-729-900-51	s	TRANSISTOR DTA114TK
Q70	8-729-140-75	s	TRANSISTOR 2SD999-CLCK
Q71	8-729-900-51	s	TRANSISTOR DTA114TK
Q72	8-729-140-75	s	TRANSISTOR 2SD999-CLCK
Q73	8-729-900-51	s	TRANSISTOR DTA114TK
Q74	8-729-140-75	s	TRANSISTOR 2SD999-CLCK
Q75	8-729-900-51	s	TRANSISTOR DTA114TK
Q76	8-729-140-75	s	TRANSISTOR 2SD999-CLCK
Q77	8-729-900-51	s	TRANSISTOR DTA114TK
Q78	8-729-140-75	s	TRANSISTOR 2SD999-CLCK
Q79	8-729-900-51	s	TRANSISTOR DTA114TK
Q80	8-729-140-75	s	TRANSISTOR 2SD999-CLCK
Q81	8-729-119-78	s	TRANSISTOR 2SC2785-HFE
Q82	8-729-119-78	s	TRANSISTOR 2SC2785-HFE
Q83	8-729-900-51	s	TRANSISTOR DTA114TK
Q84	8-729-140-75	s	TRANSISTOR 2SD999-CLCK
R1	1-249-409-11	s	CARBON 220 5% 1/4W
R2	1-217-666-31	s	RES, SHORTING 0.01 1/6W
R3	1-249-428-11	s	CARBON 10K 5% 1/4W
R4	1-249-421-11	s	CARBON 2.2K 5% 1/4W
R5	1-249-417-11	s	CARBON 1K 5% 1/4W
R6	1-249-417-11	s	CARBON 1K 5% 1/4W
R7	1-249-417-11	s	CARBON 1K 5% 1/4W
R8	1-249-417-11	s	CARBON 1K 5% 1/4W
R9	1-249-429-11	s	CARBON 10K 5% 1/4W
R10	1-249-429-11	s	CARBON 10K 5% 1/4W
R11	1-249-429-11	s	CARBON 10K 5% 1/4W
R12	1-249-429-11	s	CARBON 10K 5% 1/4W
R13	1-249-429-11	s	CARBON 10K 5% 1/4W
R14	1-249-429-11	s	CARBON 10K 5% 1/4W
R15	1-249-435-11	s	CARBON 33K 5% 1/4W
R16	1-249-427-11	s	CARBON 6.8K 5% 1/4W
R17	1-249-429-11	s	CARBON 10K 5% 1/4W
R18	1-249-429-11	s	CARBON 10K 5% 1/4W
R19	1-249-429-11	s	CARBON 10K 5% 1/4W
R20	1-247-903-00	s	CARBON 1M 5% 1/4W

(KV-188D BOARD)

Ref. No. or Q'ty	Part No.	SP	Description
R21	1-249-429-11	s	CARBON 10K 5% 1/4W
R22	1-249-433-11	s	CARBON 22K 5% 1/4W
R23	1-249-433-11	s	CARBON 22K 5% 1/4W
R24	1-249-429-11	s	CARBON 10K 5% 1/4W
R25	1-249-429-11	s	CARBON 10K 5% 1/4W
R26	1-249-437-11	s	CARBON 47K 5% 1/4W
R27	1-249-437-11	s	CARBON 47K 5% 1/4W
R28	1-249-425-11	s	CARBON 4.7K 5% 1/4W
R29	1-249-425-11	s	CARBON 4.7K 5% 1/4W
R30	1-249-406-11	s	CARBON 120 5% 1/4W
R31	1-249-406-11	s	CARBON 120 5% 1/4W
R32	1-249-406-11	s	CARBON 120 5% 1/4W
R33	1-249-406-11	s	CARBON 120 5% 1/4W
R34	1-249-406-11	s	CARBON 120 5% 1/4W
R35	1-249-406-11	s	CARBON 120 5% 1/4W
R36	1-249-406-11	s	CARBON 120 5% 1/4W
R37	1-249-429-11	s	CARBON 10K 5% 1/4W
R38	1-249-429-11	s	CARBON 10K 5% 1/4W
R39	1-249-429-11	s	CARBON 10K 5% 1/4W
R40	1-249-429-11	s	CARBON 10K 5% 1/4W
R41	1-249-429-11	s	CARBON 10K 5% 1/4W
R42	1-249-429-11	s	CARBON 10K 5% 1/4W
R43	1-249-429-11	s	CARBON 10K 5% 1/4W
R44	1-249-429-11	s	CARBON 10K 5% 1/4W
R45	1-249-417-11	s	CARBON 1K 5% 1/4W
R46	1-249-417-11	s	CARBON 1K 5% 1/4W
R47	1-249-417-11	s	CARBON 1K 5% 1/4W
R48	1-249-417-11	s	CARBON 1K 5% 1/4W
R49	1-249-417-11	s	CARBON 1K 5% 1/4W
R50	1-249-417-11	s	CARBON 1K 5% 1/4W
R51	1-249-417-11	s	CARBON 1K 5% 1/4W
R52	1-249-417-11	s	CARBON 1K 5% 1/4W
R53	1-249-417-11	s	CARBON 1K 5% 1/4W
R54	1-249-417-11	s	CARBON 1K 5% 1/4W
R55	1-249-417-11	s	CARBON 1K 5% 1/4W
R56	1-249-417-11	s	CARBON 1K 5% 1/4W
R57	1-249-417-11	s	CARBON 1K 5% 1/4W
R58	1-249-417-11	s	CARBON 1K 5% 1/4W
R59	1-249-417-11	s	CARBON 1K 5% 1/4W
R60	1-249-417-11	s	CARBON 1K 5% 1/4W
R61	1-249-409-11	s	CARBON 220 5% 1/4W
R62	1-249-405-11	s	CARBON 100 5% 1/4W
R63	1-249-405-11	s	CARBON 100 5% 1/4W
R64	1-249-405-11	s	CARBON 100 5% 1/4W
R65	1-249-405-11	s	CARBON 100 5% 1/4W
R66	1-249-405-11	s	CARBON 100 5% 1/4W
R67	1-249-405-11	s	CARBON 100 5% 1/4W
R68	1-249-405-11	s	CARBON 100 5% 1/4W
R69	1-249-405-11	s	CARBON 100 5% 1/4W
R70	1-249-405-11	s	CARBON 100 5% 1/4W
R71	1-249-405-11	s	CARBON 100 5% 1/4W
R72	1-216-057-00	s	METAL, CHIP 2.2K 5% 1/10W
R73	1-216-057-00	s	METAL, CHIP 2.2K 5% 1/10W
R74	1-249-404-00	s	CARBON 82 5% 1/4W
R76	1-216-057-00	s	METAL, CHIP 2.2K 5% 1/10W
R77	1-216-057-00	s	METAL, CHIP 2.2K 5% 1/10W
R78	1-249-404-00	s	CARBON 82 5% 1/4W
R80	1-216-057-00	s	METAL, CHIP 2.2K 5% 1/10W
R81	1-216-057-00	s	METAL, CHIP 2.2K 5% 1/10W

(KV-188D BOARD)

Ref. No. or Q'ty	Part No.	SP	Description
R82	1-249-404-00	s	CARBON 82 5% 1/4W
R84	1-216-057-00	s	METAL, CHIP 2.2K 5% 1/10W
R85	1-216-057-00	s	METAL, CHIP 2.2K 5% 1/10W
R86	1-249-404-00	s	CARBON 82 5% 1/4W
R88	1-216-057-00	s	METAL, CHIP 2.2K 5% 1/10W
R89	1-216-057-00	s	METAL, CHIP 2.2K 5% 1/10W
R90	1-249-404-00	s	CARBON 82 5% 1/4W
R92	1-216-057-00	s	METAL, CHIP 2.2K 5% 1/10W
R93	1-216-057-00	s	METAL, CHIP 2.2K 5% 1/10W
R94	1-249-404-00	s	CARBON 82 5% 1/4W
R96	1-216-057-00	s	METAL, CHIP 2.2K 5% 1/10W
R97	1-216-057-00	s	METAL, CHIP 2.2K 5% 1/10W
R98	1-249-404-00	s	CARBON 82 5% 1/4W
R100	1-216-057-00	s	METAL, CHIP 2.2K 5% 1/10W
R101	1-216-057-00	s	METAL, CHIP 2.2K 5% 1/10W
R102	1-249-408-11	s	CARBON 180 5% 1/4W
R104	1-216-057-00	s	METAL, CHIP 2.2K 5% 1/10W
R105	1-216-057-00	s	METAL, CHIP 2.2K 5% 1/10W
R106	1-249-404-00	s	CARBON 82 5% 1/4W
R108	1-216-057-00	s	METAL, CHIP 2.2K 5% 1/10W
R109	1-216-057-00	s	METAL, CHIP 2.2K 5% 1/10W
R110	1-249-407-11	s	CARBON 150 5% 1/4W
R111	1-216-057-00	s	METAL, CHIP 2.2K 5% 1/10W
R112	1-216-057-00	s	METAL, CHIP 2.2K 5% 1/10W
R113	1-249-407-11	s	CARBON 150 5% 1/4W
R114	1-216-057-00	s	METAL, CHIP 2.2K 5% 1/10W
R115	1-216-057-00	s	METAL, CHIP 2.2K 5% 1/10W
R116	1-249-407-11	s	CARBON 150 5% 1/4W
R117	1-216-057-00	s	METAL, CHIP 2.2K 5% 1/10W
R118	1-216-057-00	s	METAL, CHIP 2.2K 5% 1/10W
R119	1-249-407-11	s	CARBON 150 5% 1/4W
R120	1-216-057-00	s	METAL, CHIP 2.2K 5% 1/10W
R121	1-216-057-00	s	METAL, CHIP 2.2K 5% 1/10W
R122	1-249-407-11	s	CARBON 150 5% 1/4W
R123	1-216-057-00	s	METAL, CHIP 2.2K 5% 1/10W
R124	1-216-057-00	s	METAL, CHIP 2.2K 5% 1/10W
R125	1-249-404-00	s	CARBON 82 5% 1/4W
R127	1-216-057-00	s	METAL, CHIP 2.2K 5% 1/10W
R128	1-216-057-00	s	METAL, CHIP 2.2K 5% 1/10W
R129	1-249-404-00	s	CARBON 82 5% 1/4W
R131	1-216-057-00	s	METAL, CHIP 2.2K 5% 1/10W
R132	1-216-057-00	s	METAL, CHIP 2.2K 5% 1/10W
R133	1-249-408-11	s	CARBON 180 5% 1/4W
R135	1-216-057-00	s	METAL, CHIP 2.2K 5% 1/10W
R136	1-216-057-00	s	METAL, CHIP 2.2K 5% 1/10W
R137	1-249-404-00	s	CARBON 82 5% 1/4W
R139	1-216-057-00	s	METAL, CHIP 2.2K 5% 1/10W
R140	1-216-057-00	s	METAL, CHIP 2.2K 5% 1/10W
R141	1-249-407-11	s	CARBON 150 5% 1/4W
R142	1-216-057-00	s	METAL, CHIP 2.2K 5% 1/10W
R143	1-216-057-00	s	METAL, CHIP 2.2K 5% 1/10W
R144	1-249-407-11	s	CARBON 150 5% 1/4W
R145	1-216-057-00	s	METAL, CHIP 2.2K 5% 1/10W
R146	1-216-057-00	s	METAL, CHIP 2.2K 5% 1/10W
R147	1-249-407-11	s	CARBON 150 5% 1/4W
R148	1-216-057-00	s	METAL, CHIP 2.2K 5% 1/10W
R149	1-216-057-00	s	METAL, CHIP 2.2K 5% 1/10W
R150	1-249-407-11	s	CARBON 150 5% 1/4W
R151	1-216-057-00	s	METAL, CHIP 2.2K 5% 1/10W

(KY-188D BOARD)

Ref. No. or Q'ty	Part No.	SP	Description
R152	1-216-057-00	s	METAL, CHIP 2.2K 5% 1/10W
R153	1-249-407-11	s	CARBON 150 5% 1/4W
R154	1-216-057-00	s	METAL, CHIP 2.2K 5% 1/10W
R155	1-216-057-00	s	METAL, CHIP 2.2K 5% 1/10W
R156	1-249-407-11	s	CARBON 150 5% 1/4W
R157	1-216-057-00	s	METAL, CHIP 2.2K 5% 1/10W
R158	1-216-057-00	s	METAL, CHIP 2.2K 5% 1/10W
R159	1-249-425-11	s	CARBON 4.7K 5% 1/4W
R160	1-249-425-11	s	CARBON 4.7K 5% 1/4W
R161	1-249-425-11	s	CARBON 4.7K 5% 1/4W
R162	1-249-425-11	s	CARBON 4.7K 5% 1/4W
R163	1-249-425-11	s	CARBON 4.7K 5% 1/4W
R170	1-249-429-11	s	CARBON 10K 5% 1/4W
R171	1-249-429-11	s	CARBON 10K 5% 1/4W
R172	1-249-426-11	s	CARBON 5.6K 5% 1/4W
R173	1-249-417-11	s	CARBON 1K 5% 1/4W
S1	1-571-169-11	s	SWITCH, TACTILE, WITH LED
S2	1-571-169-21	s	SWITCH, TACTILE, WITH LED
S3	1-571-167-41	s	SWITCH, TACTILE, WITH LED
S4	1-571-167-31	s	SWITCH, TACTILE, WITH LED
S5	1-571-167-21	s	SWITCH, TACTILE, WITH LED
S6	1-571-167-11	s	SWITCH, TACTILE, WITH LED
S7	1-571-167-11	s	SWITCH, TACTILE, WITH LED
S8	1-571-168-21	s	SWITCH, TACTILE, WITH LED
S9	1-571-167-11	s	SWITCH, TACTILE, WITH LED
S10	1-571-280-11	s	SWITCH, PUSH, WITH LED
S11	1-571-280-11	s	SWITCH, PUSH, WITH LED
S12	1-571-280-11	s	SWITCH, PUSH, WITH LED
S13	1-571-280-11	s	SWITCH, PUSH, WITH LED
S14	1-571-280-11	s	SWITCH, PUSH, WITH LED
S15	1-571-280-11	s	SWITCH, PUSH, WITH LED
S16	1-571-167-11	s	SWITCH, TACTILE, WITH LED
S17	1-571-167-11	s	SWITCH, TACTILE, WITH LED
S18	1-571-168-11	s	SWITCH, TACTILE, WITH LED
S19	1-571-167-11	s	SWITCH, TACTILE, WITH LED
S20	1-516-995-00	s	SWITCH, LEVER SLIDE
S21	1-571-280-11	s	SWITCH, PUSH, WITH LED
S22	1-571-280-11	s	SWITCH, PUSH, WITH LED
S23	1-571-280-11	s	SWITCH, PUSH, WITH LED
S24	1-571-280-11	s	SWITCH, PUSH, WITH LED
S25	1-571-280-11	s	SWITCH, PUSH, WITH LED
S26	1-516-995-00	s	SWITCH, LEVER SLIDE
S27	1-516-961-00	s	SWITCH, LEVER SLIDE
S28	1-516-961-00	s	SWITCH, LEVER SLIDE
X1	1-567-869-11	s	RESONATOR, CERAMIC 9.83MHz

KY-205 BOARD

Ref. No. or Q'ty	Part No.	SP	Description
This board is included in the KY-188D board.			
1pc	1-634-411-11	o	PRINTED CIRCUIT BOARD, KY-205
CN4	1-535-699-11	o	CABLE, JUMPER 23P
S32	1-552-539-00	s	SWITCH, TACTILE
S33	1-552-539-00	s	SWITCH, TACTILE
S34	1-552-539-00	s	SWITCH, TACTILE

KY-206 BOARD

Ref. No. or Q'ty	Part No.	SP	Description
This board is included in the KY-188D board.			
1pc	1-634-412-11	o	PRINTED CIRCUIT BOARD, KY-206
CN5	1-535-699-11	o	CABLE, JUMPER 23P
D54	8-719-800-94	s	LED TLUR144, RED
S35	1-552-539-00	s	SWITCH, TACTILE
S36	1-552-539-00	s	SWITCH, TACTILE
S37	1-552-539-00	s	SWITCH, TACTILE
S38	1-552-539-00	s	SWITCH, TACTILE

LP-57 BOARD

Ref. No. or Q'ty	Part No.	SP	Description
1pc	3-171-508-01	o	HOLDER, LAMP
CN932	1-506-467-11	s	CONNECTOR, 2P, MALE
D1	8-719-820-27	s	LED TLY-256, YEL
D2	8-719-820-27	s	LED TLY-256, YEL
D3	8-719-820-27	s	LED TLY-256, YEL
D4	8-719-820-27	s	LED TLY-256, YEL
D5	8-719-820-27	s	LED TLY-256, YEL
D6	8-719-820-27	s	LED TLY-256, YEL
D7	8-719-820-27	s	LED TLY-256, YEL
D8	8-719-820-27	s	LED TLY-256, YEL
D9	8-719-820-27	s	LED TLY-256, YEL
D10	8-719-820-27	s	LED TLY-256, YEL
R1	1-249-409-11	s	CARBON 220 5% 1/4W
R2	1-249-409-11	s	CARBON 220 5% 1/4W
R3	1-249-409-11	s	CARBON 220 5% 1/4W
R4	1-249-409-11	s	CARBON 220 5% 1/4W
R5	1-249-409-11	s	CARBON 220 5% 1/4W

MB-394 BOARD

Ref. No. or Q'ty	Part No.	SP	Description
1pc	A-6754-366-A	o	MOUNTED CIRCUIT BOARD, MB-394
10pcs	7-682-648-09	s	SCREW +PS 3X8
C101	1-124-148-00	s	ELECT 100uF 20% 25V
C102	1-124-148-00	s	ELECT 100uF 20% 25V
CN002	1-564-242-00	o	CONNECTOR, 5P
CN003	1-564-243-00	o	CONNECTOR, VH 6P, MALE
CN004	1-564-915-11	o	CONNECTOR, VH 7P, MALE
CN100	1-566-319-11	o	CONNECTOR, D-SUB 15P, MALE
CN102	1-569-719-11	o	CONNECTOR
CN103	1-563-770-11	s	CONNECTOR, D-SUB 9P, FEMALE
CN104	1-563-770-11	s	CONNECTOR, D-SUB 9P, FEMALE
CN105	1-563-771-11	s	CONNECTOR, D-SUB 15P, FEMALE
CN110	1-573-784-11	o	CONNECTOR, PHEC 60P, FEMALE
CN111	1-573-784-11	o	CONNECTOR, PHEC 60P, FEMALE
CN112	1-573-784-11	o	CONNECTOR, PHEC 60P, FEMALE
CN113	1-573-784-11	o	CONNECTOR, PHEC 60P, FEMALE
CN114	1-573-784-11	o	CONNECTOR, PHEC 60P, FEMALE
CN115	1-573-784-11	o	CONNECTOR, PHEC 60P, FEMALE
CN116	1-573-784-11	o	CONNECTOR, PHEC 60P, FEMALE
CN117	1-573-784-11	o	CONNECTOR, PHEC 60P, FEMALE
CN118	1-573-784-11	o	CONNECTOR, PHEC 60P, FEMALE
CN119	1-573-784-11	o	CONNECTOR, PHEC 60P, FEMALE
CN120	1-573-784-11	o	CONNECTOR, PHEC 60P, FEMALE
CN121	1-573-784-11	o	CONNECTOR, PHEC 60P, FEMALE
CN130	1-573-598-11	s	CONNECTOR, PHEC 100P, FEMALE
CN132	1-573-598-11	s	CONNECTOR, PHEC 100P, FEMALE
CN133	1-573-598-11	s	CONNECTOR, PHEC 100P, FEMALE
CN134	1-573-598-11	s	CONNECTOR, PHEC 100P, FEMALE
CN135	1-573-598-11	s	CONNECTOR, PHEC 100P, FEMALE
CN136	1-573-598-11	s	CONNECTOR, PHEC 100P, FEMALE
CN137	1-573-598-11	s	CONNECTOR, PHEC 100P, FEMALE
CN138	1-573-598-11	s	CONNECTOR, PHEC 100P, FEMALE
CN139	1-573-598-11	s	CONNECTOR, PHEC 100P, FEMALE
CN140	1-573-598-11	s	CONNECTOR, PHEC 100P, FEMALE
CN141	1-573-598-11	s	CONNECTOR, PHEC 100P, FEMALE
CN210	1-506-471-11	s	CONNECTOR, 6P, MALE
CN212	1-506-475-11	s	CONNECTOR, 10P, MALE
CN220	1-506-476-11	s	CONNECTOR, 11P, MALE
CN221	1-506-468-11	s	CONNECTOR, 3P, MALE
CN230	1-580-536-11	s	CONNECTOR, LY 14P, MALE
CN231	1-580-541-11	s	CONNECTOR, LY 24P, MALE
CN240	1-506-900-00	s	CONNECTOR (M) 2P
CN250	1-580-539-11	o	CONNECTOR, LY 20P, MALE
CN252	1-580-537-11	o	CONNECTOR, LY 16P, MALE
CN255	1-580-538-11	o	CONNECTOR, LY 18P, MALE
CN258	1-580-535-11	o	CONNECTOR, LY 12P, MALE
CN260	1-564-209-00	o	CONNECTOR 10P, MALE
CN262	1-690-104-11	s	CABLE, FLAT 64P
CN269	1-580-847-11	s	CONNECTOR, BB 15P, MALE
CN270	1-580-847-11	s	CONNECTOR, BB 15P, MALE
CN271	1-566-342-11	s	CONNECTOR, 30P, MALE
CN272	1-506-471-11	s	CONNECTOR, 6P, MALE
CN273	1-506-472-11	s	CONNECTOR, 7P, MALE
CN274	1-506-473-11	s	CONNECTOR, 8P, MALE
CN285	1-506-474-11	s	CONNECTOR, 9P, MALE
CN286	1-566-761-11	o	CONNECTOR, 6P, MALE
CN287	1-506-476-11	s	CONNECTOR, 11P, MALE
CN288	1-566-767-11	o	CONNECTOR, ZR 12P, MALE

(MB-394 BOARD)

Ref. No. or Q'ty	Part No.	SP	Description
CN300	1-506-484-11	s	CONNECTOR, 5P, MALE
CN301	1-506-484-11	s	CONNECTOR, 5P, MALE
CN302	1-573-781-11	s	CONNECTOR, IL-S 8P, MALE
CN303	1-573-779-11	s	CONNECTOR, IL-S 2P, MALE
CN304	1-573-780-11	s	CONNECTOR, IL-S 6P, MALE
R101	⚠ 1-215-910-00	s	METAL 68 5% 3W

MDM-5P BOARD

Ref. No. or Q'ty	Part No.	SP	Description
1pc	A-6727-363-A	o	MOUNTED CIRCUIT BOARD, MDM-5P
1pc	8-752-036-77	s	IC CXA1179N
C1	1-163-037-11	s	CERAMIC, CHIP 0.022uF 10% 25V
C2	1-163-108-00	s	CERAMIC, CHIP 43PF 5% 50V
C3	1-163-115-00	s	CERAMIC, CHIP 82PF 5% 50V
C4	1-163-108-00	s	CERAMIC, CHIP 43PF 5% 50V
C7	1-163-037-11	s	CERAMIC, CHIP 0.022uF 10% 25V
C8	1-163-037-11	s	CERAMIC, CHIP 0.022uF 10% 25V
C9	1-163-116-00	s	CERAMIC, CHIP 91PF 5% 50V
C10	1-163-037-11	s	CERAMIC, CHIP 0.022uF 10% 25V
C11	1-163-037-11	s	CERAMIC, CHIP 0.022uF 10% 25V
C12	1-163-241-11	s	CERAMIC, CHIP 39PF 5% 50V
C21	1-163-037-11	s	CERAMIC, CHIP 0.022uF 10% 25V
C22	1-163-245-11	s	CERAMIC 56PF 5% 50V
C23	1-163-119-00	s	CERAMIC, CHIP 120PF 5% 50V
C24	1-163-245-11	s	CERAMIC 56PF 5% 50V
C27	1-163-037-11	s	CERAMIC, CHIP 0.022uF 10% 25V
C28	1-163-037-11	s	CERAMIC, CHIP 0.022uF 10% 25V
C29	1-163-119-00	s	CERAMIC, CHIP 120PF 5% 50V
C30	1-163-037-11	s	CERAMIC, CHIP 0.022uF 10% 25V
C31	1-163-037-11	s	CERAMIC, CHIP 0.022uF 10% 25V
C32	1-163-108-00	s	CERAMIC, CHIP 43PF 5% 50V
C51	1-163-037-11	s	CERAMIC, CHIP 0.022uF 10% 25V
C52	1-163-110-00	s	CERAMIC, CHIP 51PF 5% 50V
C53	1-163-251-11	s	CERAMIC, CHIP 100PF 5% 50V
C54	1-163-110-00	s	CERAMIC, CHIP 51PF 5% 50V
C55	1-163-123-00	s	CERAMIC, CHIP 180PF 5% 50V
C56	1-163-135-00	s	CERAMIC, CHIP 560PF 5% 50V
C57	1-163-037-11	s	CERAMIC, CHIP 0.022uF 10% 25V
C58	1-163-037-11	s	CERAMIC, CHIP 0.022uF 10% 25V
C59	1-163-118-00	s	CERAMIC, CHIP 110PF 5% 50V
C60	1-163-037-11	s	CERAMIC, CHIP 0.022uF 10% 25V
C61	1-163-037-11	s	CERAMIC, CHIP 0.022uF 10% 25V
C62	1-163-241-11	s	CERAMIC, CHIP 39PF 5% 50V
C71	1-163-037-11	s	CERAMIC, CHIP 0.022uF 10% 25V
C72	1-163-112-00	s	CERAMIC, CHIP 62PF 5% 50V
C73	1-163-120-00	s	CERAMIC 130PF 5% 50V
C74	1-163-112-00	s	CERAMIC, CHIP 62PF 5% 50V
C77	1-163-037-11	s	CERAMIC, CHIP 0.022uF 10% 25V
C78	1-163-037-11	s	CERAMIC, CHIP 0.022uF 10% 25V
C79	1-163-121-00	s	CERAMIC, CHIP 150PF 5% 50V
C80	1-163-037-11	s	CERAMIC, CHIP 0.022uF 10% 25V
C81	1-163-037-11	s	CERAMIC, CHIP 0.022uF 10% 25V
C82	1-163-245-11	s	CERAMIC 56PF 5% 50V
C101	1-163-037-11	s	CERAMIC, CHIP 0.022uF 10% 25V
C102	1-163-037-11	s	CERAMIC, CHIP 0.022uF 10% 25V
C103	1-163-037-11	s	CERAMIC, CHIP 0.022uF 10% 25V
C104	1-124-443-00	s	ELECT 100uF 20% 10V
C105	1-163-037-11	s	CERAMIC, CHIP 0.022uF 10% 25V
C106	1-163-037-11	s	CERAMIC, CHIP 0.022uF 10% 25V
C107	1-163-037-11	s	CERAMIC, CHIP 0.022uF 10% 25V
C108	1-163-037-11	s	CERAMIC, CHIP 0.022uF 10% 25V
C109	1-124-443-00	s	ELECT 100uF 20% 10V
C110	1-124-443-00	s	ELECT 100uF 20% 10V
C111	1-163-037-11	s	CERAMIC, CHIP 0.022uF 10% 25V
C112	1-163-037-11	s	CERAMIC, CHIP 0.022uF 10% 25V
C113	1-163-037-11	s	CERAMIC, CHIP 0.022uF 10% 25V
C114	1-163-037-11	s	CERAMIC, CHIP 0.022uF 10% 25V

(MDM-5P BOARD)

Ref. No. or Q'ty	Part No.	SP	Description
C115	1-124-443-00	s	ELECT 100uF 20% 10V
C117	1-163-037-11	s	CERAMIC, CHIP 0.022uF 10% 25V
C118	1-163-037-11	s	CERAMIC, CHIP 0.022uF 10% 25V
C119	1-163-037-11	s	CERAMIC, CHIP 0.022uF 10% 25V
C120	1-163-037-11	s	CERAMIC, CHIP 0.022uF 10% 25V
C121	1-163-037-11	s	CERAMIC, CHIP 0.022uF 10% 25V
C122	1-163-037-11	s	CERAMIC, CHIP 0.022uF 10% 25V
C123	1-163-037-11	s	CERAMIC, CHIP 0.022uF 10% 25V
C124	1-163-037-11	s	CERAMIC, CHIP 0.022uF 10% 25V
C125	1-163-037-11	s	CERAMIC, CHIP 0.022uF 10% 25V
C126	1-163-037-11	s	CERAMIC, CHIP 0.022uF 10% 25V
C127	1-163-037-11	s	CERAMIC, CHIP 0.022uF 10% 25V
C128	1-163-037-11	s	CERAMIC, CHIP 0.022uF 10% 25V
C129	1-163-037-11	s	CERAMIC, CHIP 0.022uF 10% 25V
C130	1-163-037-11	s	CERAMIC, CHIP 0.022uF 10% 25V
C131	1-163-037-11	s	CERAMIC, CHIP 0.022uF 10% 25V
C132	1-163-037-11	s	CERAMIC, CHIP 0.022uF 10% 25V
C133	1-163-133-00	s	CERAMIC, CHIP 470PF 5% 50V
C134	1-163-133-00	s	CERAMIC, CHIP 470PF 5% 50V
C135	1-163-133-00	s	CERAMIC, CHIP 470PF 5% 50V
C136	1-163-133-00	s	CERAMIC, CHIP 470PF 5% 50V
C201	1-163-037-11	s	CERAMIC, CHIP 0.022uF 10% 25V
C202	1-163-235-11	s	CERAMIC, CHIP 22PF 5% 50V
C203	1-163-037-11	s	CERAMIC, CHIP 0.022uF 10% 25V
C204	1-163-037-11	s	CERAMIC, CHIP 0.022uF 10% 25V
C205	1-163-037-11	s	CERAMIC, CHIP 0.022uF 10% 25V
C206	1-163-037-11	s	CERAMIC, CHIP 0.022uF 10% 25V
C207	1-163-037-11	s	CERAMIC, CHIP 0.022uF 10% 25V
C208	1-163-127-00	s	CERAMIC, CHIP 270PF 5% 50V
C209	1-163-120-00	s	CERAMIC 130PF 5% 50V
C210	1-163-110-00	s	CERAMIC, CHIP 51PF 5% 50V
C211	1-163-127-00	s	CERAMIC, CHIP 270PF 5% 50V
C212	1-163-251-11	s	CERAMIC 100PF 5% 50V
C213	1-163-245-11	s	CERAMIC 56PF 5% 50V
C214	1-163-037-11	s	CERAMIC, CHIP 0.022uF 10% 25V
C215	1-163-037-11	s	CERAMIC, CHIP 0.022uF 10% 25V
C216	1-163-037-11	s	CERAMIC, CHIP 0.022uF 10% 25V
C217	1-163-037-11	s	CERAMIC, CHIP 0.022uF 10% 25V
C218	1-163-037-11	s	CERAMIC, CHIP 0.022uF 10% 25V
C219	1-163-237-11	s	CERAMIC, CHIP 27PF 5% 50V
C220	1-163-109-00	s	CERAMIC, CHIP 47PF 5% 50V
C221	1-163-097-00	s	CERAMIC, CHIP 15PF 5% 50V
C222	1-163-037-11	s	CERAMIC, CHIP 0.022uF 10% 25V
C251	1-163-037-11	s	CERAMIC, CHIP 0.022uF 10% 25V
C252	1-163-037-11	s	CERAMIC, CHIP 0.022uF 10% 25V
C253	1-163-037-11	s	CERAMIC, CHIP 0.022uF 10% 25V
C254	1-163-235-11	s	CERAMIC, CHIP 22PF 5% 50V
C255	1-163-037-11	s	CERAMIC, CHIP 0.022uF 10% 25V
C256	1-163-037-11	s	CERAMIC, CHIP 0.022uF 10% 25V
C257	1-163-037-11	s	CERAMIC, CHIP 0.022uF 10% 25V
C258	1-163-118-00	s	CERAMIC, CHIP 110PF 5% 50V
C259	1-163-037-11	s	CERAMIC, CHIP 0.022uF 10% 25V
C260	1-163-120-00	s	CERAMIC 130PF 5% 50V
C261	1-163-037-11	s	CERAMIC, CHIP 0.022uF 10% 25V
C262	1-163-037-11	s	CERAMIC, CHIP 0.022uF 10% 25V
C263	1-163-037-11	s	CERAMIC, CHIP 0.022uF 10% 25V
C264	1-163-037-11	s	CERAMIC, CHIP 0.022uF 10% 25V
C265	1-163-037-11	s	CERAMIC, CHIP 0.022uF 10% 25V
C266	1-124-477-11	s	ELECT 47uF 20% 25V

(MDM-5P BOARD)

Ref. No. or Q'ty	Part No.	SP	Description
C267	1-131-347-00	s	TANTALUM 1uF 10% 35V
C268	1-163-037-11	s	CERAMIC, CHIP 0.022uF 10% 25V
C269	1-163-091-00	s	CERAMIC, CHIP 8PF 50V
C270	1-163-037-11	s	CERAMIC, CHIP 0.022uF 10% 25V
C271	1-163-235-11	s	CERAMIC, CHIP 22PF 5% 50V
C274	1-163-037-11	s	CERAMIC, CHIP 0.022uF 10% 25V
C275	1-163-037-11	s	CERAMIC, CHIP 0.022uF 10% 25V
C276	1-163-037-11	s	CERAMIC, CHIP 0.022uF 10% 25V
C301	1-163-037-11	s	CERAMIC, CHIP 0.022uF 10% 25V
C302	1-163-037-11	s	CERAMIC, CHIP 0.022uF 10% 25V
C303	1-163-037-11	s	CERAMIC, CHIP 0.022uF 10% 25V
C304	1-163-037-11	s	CERAMIC, CHIP 0.022uF 10% 25V
C305	1-163-088-00	s	CERAMIC, CHIP 5PF 50V
C306	1-163-088-00	s	CERAMIC, CHIP 5PF 50V
C307	1-124-443-00	s	ELECT 100uF 20% 10V
C308	1-164-004-11	s	CERAMIC, CHIP 0.1uF 10% 25V
C309	1-163-037-11	s	CERAMIC, CHIP 0.022uF 10% 25V
C310	1-164-004-11	s	CERAMIC, CHIP 0.1uF 10% 25V
C311	1-164-004-11	s	CERAMIC, CHIP 0.1uF 10% 25V
C312	1-164-004-11	s	CERAMIC, CHIP 0.1uF 10% 25V
C313	1-164-004-11	s	CERAMIC, CHIP 0.1uF 10% 25V
C314	1-163-235-11	s	CERAMIC, CHIP 22PF 5% 50V
C315	1-163-105-00	s	CERAMIC, CHIP 33PF 5% 50V
C316	1-163-235-11	s	CERAMIC, CHIP 22PF 5% 50V
C317	1-163-105-00	s	CERAMIC, CHIP 33PF 5% 50V
C318	1-163-235-11	s	CERAMIC, CHIP 22PF 5% 50V
C319	1-163-105-00	s	CERAMIC, CHIP 33PF 5% 50V
C320	1-163-235-11	s	CERAMIC, CHIP 22PF 5% 50V
C321	1-163-105-00	s	CERAMIC, CHIP 33PF 5% 50V
C322	1-163-037-11	s	CERAMIC, CHIP 0.022uF 10% 25V
C323	1-124-443-00	s	ELECT 100uF 20% 10V
C325	1-164-004-11	s	CERAMIC, CHIP 0.1uF 10% 25V
C401	1-163-037-11	s	CERAMIC, CHIP 0.022uF 10% 25V
C402	1-163-037-11	s	CERAMIC, CHIP 0.022uF 10% 25V
C403	1-163-037-11	s	CERAMIC, CHIP 0.022uF 10% 25V
C404	1-163-037-11	s	CERAMIC, CHIP 0.022uF 10% 25V
C405	1-163-037-11	s	CERAMIC, CHIP 0.022uF 10% 25V
C406	1-163-037-11	s	CERAMIC, CHIP 0.022uF 10% 25V
C407	1-163-037-11	s	CERAMIC, CHIP 0.022uF 10% 25V
C408	1-163-037-11	s	CERAMIC, CHIP 0.022uF 10% 25V
C409	1-163-037-11	s	CERAMIC, CHIP 0.022uF 10% 25V
C410	1-124-443-00	s	ELECT 100uF 20% 10V
C411	1-163-037-11	s	CERAMIC, CHIP 0.022uF 10% 25V
C412	1-163-037-11	s	CERAMIC, CHIP 0.022uF 10% 25V
C413	1-124-477-11	s	ELECT 47uF 20% 25V
C415	1-107-349-11	s	MICA 150PF 0.25% 100V
C416	1-163-037-11	s	CERAMIC, CHIP 0.022uF 10% 25V
C417	1-124-477-11	s	ELECT 47uF 20% 25V
C418	1-124-443-00	s	ELECT 100uF 20% 10V
C419	1-124-927-11	s	ELECT 4.7uF 20% 100V
C420	1-163-086-00	s	CERAMIC, CHIP 3PF 50V
C421	1-163-224-11	s	CERAMIC 7PF 0.25PF 50V
C422	1-163-087-00	s	CERAMIC, CHIP 4PF 50V
C423	1-163-106-00	s	CERAMIC 36PF 5% 50V
C424	1-163-108-00	s	CERAMIC, CHIP 43PF 5% 50V
C425	1-126-233-11	s	ELECT 22uF 20% 50V
C426	1-163-037-11	s	CERAMIC, CHIP 0.022uF 10% 25V
C427	1-126-233-11	s	ELECT 22uF 20% 50V
C428	1-163-037-11	s	CERAMIC, CHIP 0.022uF 10% 25V

(MDM-5P BOARD)

Ref. No. or Q'ty	Part No.	SP	Description
C429	1-124-443-00	s	ELECT 100uF 20% 10V
C430	1-131-347-00	s	TANTALUM 1uF 10% 35V
C431	1-163-037-11	s	CERAMIC, CHIP 0.022uF 10% 25V
C432	1-127-518-11	s	ALUMN SOLID 220uF 20% 10V
C433	1-163-037-11	s	CERAMIC, CHIP 0.022uF 10% 25V
C434	1-124-443-00	s	ELECT 100uF 20% 10V
C435	1-163-037-11	s	CERAMIC, CHIP 0.022uF 10% 25V
C436	1-163-037-11	s	CERAMIC, CHIP 0.022uF 10% 25V
C437	1-124-443-00	s	ELECT 100uF 20% 10V
C438	1-163-234-11	s	CERAMIC, CHIP 20PF 5% 50V
C442	1-163-037-11	s	CERAMIC, CHIP 0.022uF 10% 25V
C443	1-163-037-11	s	CERAMIC, CHIP 0.022uF 10% 25V
C444	1-163-245-11	s	CERAMIC 56PF 5% 50V
C445	1-124-443-00	s	ELECT 100uF 20% 10V
C446	1-163-037-11	s	CERAMIC, CHIP 0.022uF 10% 25V
C447	1-163-037-11	s	CERAMIC, CHIP 0.022uF 10% 25V
C448	1-124-443-00	s	ELECT 100uF 20% 10V
C449	1-163-037-11	s	CERAMIC, CHIP 0.022uF 10% 25V
C450	1-124-135-00	s	ELECT 470uF 20% 6.3V
C451	1-163-037-11	s	CERAMIC, CHIP 0.022uF 10% 25V
C452	1-163-037-11	s	CERAMIC, CHIP 0.022uF 10% 25V
C453	1-163-037-11	s	CERAMIC, CHIP 0.022uF 10% 25V
C454	1-163-037-11	s	CERAMIC, CHIP 0.022uF 10% 25V
C455	1-163-037-11	s	CERAMIC, CHIP 0.022uF 10% 25V
C456	1-163-237-11	s	CERAMIC, CHIP 27PF 5% 50V
C457	1-163-037-11	s	CERAMIC, CHIP 0.022uF 10% 25V
C487	1-163-037-11	s	CERAMIC, CHIP 0.022uF 10% 25V
C488	1-163-037-11	s	CERAMIC, CHIP 0.022uF 10% 25V
C501	1-163-037-11	s	CERAMIC, CHIP 0.022uF 10% 25V
C502	1-163-037-11	s	CERAMIC, CHIP 0.022uF 10% 25V
C503	1-124-443-00	s	ELECT 100uF 20% 10V
C504	1-163-037-11	s	CERAMIC, CHIP 0.022uF 10% 25V
C505	1-163-037-11	s	CERAMIC, CHIP 0.022uF 10% 25V
C506	1-163-037-11	s	CERAMIC, CHIP 0.022uF 10% 25V
C507	1-163-037-11	s	CERAMIC, CHIP 0.022uF 10% 25V
C508	1-124-443-00	s	ELECT 100uF 20% 10V
C509	1-124-443-00	s	ELECT 100uF 20% 10V
C510	1-163-037-11	s	CERAMIC, CHIP 0.022uF 10% 25V
C511	1-163-037-11	s	CERAMIC, CHIP 0.022uF 10% 25V
C512	1-163-037-11	s	CERAMIC, CHIP 0.022uF 10% 25V
C513	1-163-037-11	s	CERAMIC, CHIP 0.022uF 10% 25V
C514	1-163-037-11	s	CERAMIC, CHIP 0.022uF 10% 25V
C515	1-124-443-00	s	ELECT 100uF 20% 10V
C517	1-163-037-11	s	CERAMIC, CHIP 0.022uF 10% 25V
C518	1-163-037-11	s	CERAMIC, CHIP 0.022uF 10% 25V
C519	1-163-037-11	s	CERAMIC, CHIP 0.022uF 10% 25V
C520	1-163-037-11	s	CERAMIC, CHIP 0.022uF 10% 25V
C521	1-163-037-11	s	CERAMIC, CHIP 0.022uF 10% 25V
C522	1-163-037-11	s	CERAMIC, CHIP 0.022uF 10% 25V
C523	1-163-037-11	s	CERAMIC, CHIP 0.022uF 10% 25V
C524	1-163-037-11	s	CERAMIC, CHIP 0.022uF 10% 25V
C525	1-163-037-11	s	CERAMIC, CHIP 0.022uF 10% 25V
C526	1-163-037-11	s	CERAMIC, CHIP 0.022uF 10% 25V
C527	1-163-037-11	s	CERAMIC, CHIP 0.022uF 10% 25V
C528	1-163-037-11	s	CERAMIC, CHIP 0.022uF 10% 25V
C529	1-163-037-11	s	CERAMIC, CHIP 0.022uF 10% 25V
C530	1-163-037-11	s	CERAMIC, CHIP 0.022uF 10% 25V
C531	1-163-037-11	s	CERAMIC, CHIP 0.022uF 10% 25V
C532	1-163-037-11	s	CERAMIC, CHIP 0.022uF 10% 25V

(MDM-5P BOARD)

Ref. No. or Q'ty	Part No.	SP	Description
C533	1-163-133-00	s	CERAMIC, CHIP 470PF 5% 50V
C534	1-163-133-00	s	CERAMIC, CHIP 470PF 5% 50V
C535	1-163-133-00	s	CERAMIC, CHIP 470PF 5% 50V
C536	1-163-133-00	s	CERAMIC, CHIP 470PF 5% 50V
C551	1-163-037-11	s	CERAMIC, CHIP 0.022uF 10% 25V
C652	1-163-251-11	s	CERAMIC, CHIP 100PF 5% 50V
C653	1-163-037-11	s	CERAMIC, CHIP 0.022uF 10% 25V
C654	1-163-122-00	s	CERAMIC 180PF 5% 50V
C655	1-163-037-11	s	CERAMIC, CHIP 0.022uF 10% 25V
C656	1-163-037-11	s	CERAMIC, CHIP 0.022uF 10% 25V
C657	1-163-037-11	s	CERAMIC, CHIP 0.022uF 10% 25V
C658	1-163-037-11	s	CERAMIC, CHIP 0.022uF 10% 25V
C659	1-163-037-11	s	CERAMIC, CHIP 0.022uF 10% 25V
C660	1-163-037-11	s	CERAMIC, CHIP 0.022uF 10% 25V
C661	1-163-037-11	s	CERAMIC, CHIP 0.022uF 10% 25V
C662	1-163-037-11	s	CERAMIC, CHIP 0.022uF 10% 25V
C663	1-124-477-11	s	ELECT 47uF 20% 25V
C664	1-131-347-00	s	TANTALUM 1uF 10% 35V
C665	1-163-037-11	s	CERAMIC, CHIP 0.022uF 10% 25V
C666	1-163-091-00	s	CERAMIC, CHIP 8PF 50V
C667	1-163-235-11	s	CERAMIC, CHIP 22PF 5% 50V
C668	1-163-037-11	s	CERAMIC, CHIP 0.022uF 10% 25V
C671	1-163-037-11	s	CERAMIC, CHIP 0.022uF 10% 25V
C701	1-163-037-11	s	CERAMIC, CHIP 0.022uF 10% 25V
C702	1-163-037-11	s	CERAMIC, CHIP 0.022uF 10% 25V
C703	1-163-037-11	s	CERAMIC, CHIP 0.022uF 10% 25V
C704	1-163-037-11	s	CERAMIC, CHIP 0.022uF 10% 25V
C707	1-163-091-00	s	CERAMIC, CHIP 8PF 50V
C708	1-124-443-00	s	ELECT 100uF 20% 10V
C709	1-163-091-00	s	CERAMIC, CHIP 8PF 50V
C710	1-163-037-11	s	CERAMIC, CHIP 0.022uF 10% 25V
C711	1-164-004-11	s	CERAMIC, CHIP 0.1uF 10% 25V
C712	1-164-004-11	s	CERAMIC, CHIP 0.1uF 10% 25V
C713	1-164-004-11	s	CERAMIC, CHIP 0.1uF 10% 25V
C714	1-164-004-11	s	CERAMIC, CHIP 0.1uF 10% 25V
C715	1-163-235-11	s	CERAMIC, CHIP 22PF 5% 50V
C716	1-163-105-00	s	CERAMIC, CHIP 33PF 5% 50V
C717	1-163-235-11	s	CERAMIC, CHIP 22PF 5% 50V
C718	1-163-105-00	s	CERAMIC, CHIP 33PF 5% 50V
C719	1-163-235-11	s	CERAMIC, CHIP 22PF 5% 50V
C720	1-163-105-00	s	CERAMIC, CHIP 33PF 5% 50V
C721	1-163-235-11	s	CERAMIC, CHIP 22PF 5% 50V
C722	1-163-105-00	s	CERAMIC, CHIP 33PF 5% 50V
C723	1-163-037-11	s	CERAMIC, CHIP 0.022uF 10% 25V
C724	1-124-443-00	s	ELECT 100uF 20% 10V
C725	1-164-004-11	s	CERAMIC, CHIP 0.1uF 10% 25V
C801	1-163-037-11	s	CERAMIC, CHIP 0.022uF 10% 25V
C802	1-163-037-11	s	CERAMIC, CHIP 0.022uF 10% 25V
C803	1-163-037-11	s	CERAMIC, CHIP 0.022uF 10% 25V
C804	1-124-443-00	s	ELECT 100uF 20% 10V
C805	1-163-037-11	s	CERAMIC, CHIP 0.022uF 10% 25V
C806	1-163-037-11	s	CERAMIC, CHIP 0.022uF 10% 25V
C807	1-124-477-11	s	ELECT 47uF 20% 25V
C809	1-107-349-11	s	MICA 150PF 0.25% 100V
C810	1-163-037-11	s	CERAMIC, CHIP 0.022uF 10% 25V
C811	1-124-927-11	s	ELECT 4.7uF 20% 100V
C812	1-124-443-00	s	ELECT 100uF 20% 10V
C813	1-124-477-11	s	ELECT 47uF 20% 25V
C814	1-163-037-11	s	CERAMIC, CHIP 0.022uF 10% 25V

(MDM-5P BOARD)

Ref. No. or Q'ty	Part No.	SP	Description
C815	1-124-443-00	s	ELECT 100uF 20% 10V
C816	1-126-233-11	s	ELECT 22uF 20% 50V
C817	1-163-037-11	s	CERAMIC, CHIP 0.022uF 10% 25V
C818	1-126-233-11	s	ELECT 22uF 20% 50V
C819	1-163-037-11	s	CERAMIC, CHIP 0.022uF 10% 25V
C820	1-124-443-00	s	ELECT 100uF 20% 10V
C821	1-163-037-11	s	CERAMIC, CHIP 0.022uF 10% 25V
C822	1-127-516-11	s	ALUMN SOLID 220uF 20% 10V
C823	1-131-347-00	s	TANTALUM 1uF 10% 35V
C824	1-163-037-11	s	CERAMIC, CHIP 0.022uF 10% 25V
C825	1-124-443-00	s	ELECT 100uF 20% 10V
C826	1-163-037-11	s	CERAMIC, CHIP 0.022uF 10% 25V
C827	1-163-037-11	s	CERAMIC, CHIP 0.022uF 10% 25V
C828	1-124-443-00	s	ELECT 100uF 20% 10V
C829	1-163-234-11	s	CERAMIC, CHIP 20PF 5% 50V
C830	1-124-443-00	s	ELECT 100uF 20% 10V
C831	1-163-037-11	s	CERAMIC, CHIP 0.022uF 10% 25V
C832	1-124-443-00	s	ELECT 100uF 20% 10V
C833	1-163-037-11	s	CERAMIC, CHIP 0.022uF 10% 25V
C835	1-124-135-00	s	ELECT 470uF 20% 6.3V
C836	1-163-037-11	s	CERAMIC, CHIP 0.022uF 10% 25V
C837	1-163-037-11	s	CERAMIC, CHIP 0.022uF 10% 25V
C839	1-163-037-11	s	CERAMIC, CHIP 0.022uF 10% 25V
C840	1-163-037-11	s	CERAMIC, CHIP 0.022uF 10% 25V
C843	1-163-037-11	s	CERAMIC, CHIP 0.022uF 10% 25V
C844	1-163-245-11	s	CERAMIC 56PF 5% 50V
C849	1-163-037-11	s	CERAMIC, CHIP 0.022uF 10% 25V
C850	1-163-037-11	s	CERAMIC, CHIP 0.022uF 10% 25V
C851	1-163-037-11	s	CERAMIC, CHIP 0.022uF 10% 25V
C852	1-163-037-11	s	CERAMIC, CHIP 0.022uF 10% 25V
C853	1-163-037-11	s	CERAMIC, CHIP 0.022uF 10% 25V
C856	1-163-237-11	s	CERAMIC, CHIP 27PF 5% 50V
C901	1-163-037-11	s	CERAMIC, CHIP 0.022uF 10% 25V
C902	1-124-443-00	s	ELECT 100uF 20% 10V
C903	1-163-037-11	s	CERAMIC, CHIP 0.022uF 10% 25V
C904	1-163-037-11	s	CERAMIC, CHIP 0.022uF 10% 25V
C905	1-124-443-00	s	ELECT 100uF 20% 10V
C906	1-163-037-11	s	CERAMIC, CHIP 0.022uF 10% 25V
C907	1-163-037-11	s	CERAMIC, CHIP 0.022uF 10% 25V
C908	1-163-235-11	s	CERAMIC, CHIP 22PF 5% 50V
C909	1-124-443-00	s	ELECT 100uF 20% 10V
C910	1-163-235-11	s	CERAMIC, CHIP 22PF 5% 50V
C911	1-124-443-00	s	ELECT 100uF 20% 10V
C912	1-124-443-00	s	ELECT 100uF 20% 10V
C913	1-163-037-11	s	CERAMIC, CHIP 0.022uF 10% 25V
C914	1-163-037-11	s	CERAMIC, CHIP 0.022uF 10% 25V
C915	1-163-037-11	s	CERAMIC, CHIP 0.022uF 10% 25V
C916	1-163-037-11	s	CERAMIC, CHIP 0.022uF 10% 25V
C917	1-124-027-11	s	ELECT 4.7uF 20% 100V
C918	1-163-037-11	s	CERAMIC, CHIP 0.022uF 10% 25V
C919	1-163-037-11	s	CERAMIC, CHIP 0.022uF 10% 25V
C920	1-163-037-11	s	CERAMIC, CHIP 0.022uF 10% 25V
C921	1-163-037-11	s	CERAMIC, CHIP 0.022uF 10% 25V
C922	1-124-443-00	s	ELECT 100uF 20% 10V
C923	1-163-037-11	s	CERAMIC, CHIP 0.022uF 10% 25V
C924	1-124-443-00	s	ELECT 100uF 20% 10V
C925	1-163-037-11	s	CERAMIC, CHIP 0.022uF 10% 25V
C926	1-163-037-11	s	CERAMIC, CHIP 0.022uF 10% 25V
C927	1-124-443-00	s	ELECT 100uF 20% 10V

(MDM-5P BOARD)

Ref. No. or Q'ty	Part No.	SP	Description
C928	1-163-037-11	s	CERAMIC, CHIP 0.022uF 10% 25V
C929	1-163-037-11	s	CERAMIC, CHIP 0.022uF 10% 25V
C930	1-124-443-00	s	ELECT 100uF 20% 10V
C931	1-124-443-00	s	ELECT 100uF 20% 10V
C932	1-163-235-11	s	CERAMIC, CHIP 22PF 5% 50V
C933	1-163-235-11	s	CERAMIC, CHIP 22PF 5% 50V
C934	1-163-037-11	s	CERAMIC, CHIP 0.022uF 10% 25V
C935	1-163-037-11	s	CERAMIC, CHIP 0.022uF 10% 25V
C936	1-163-037-11	s	CERAMIC, CHIP 0.022uF 10% 25V
C937	1-163-037-11	s	CERAMIC, CHIP 0.022uF 10% 25V
C938	1-163-037-11	s	CERAMIC, CHIP 0.022uF 10% 25V
C939	1-124-443-00	s	ELECT 100uF 20% 10V
C940	1-163-037-11	s	CERAMIC, CHIP 0.022uF 10% 25V
C941	1-163-037-11	s	CERAMIC, CHIP 0.022uF 10% 25V
C1051	1-128-101-11	s	ELECT 100uF 20% 16V
C1052	1-124-443-00	s	ELECT 100uF 20% 10V
C1053	1-163-037-11	s	CERAMIC, CHIP 0.022uF 10% 25V
C1054	1-124-443-00	s	ELECT 100uF 20% 10V
C1055	1-163-037-11	s	CERAMIC, CHIP 0.022uF 10% 25V
C1056	1-124-443-00	s	ELECT 100uF 20% 10V
C1057	1-124-443-00	s	ELECT 100uF 20% 10V
C1058	1-163-037-11	s	CERAMIC, CHIP 0.022uF 10% 25V
C1059	1-124-443-00	s	ELECT 100uF 20% 10V
C1060	1-163-037-11	s	CERAMIC, CHIP 0.022uF 10% 25V
C1061	1-124-443-00	s	ELECT 100uF 20% 10V
C1062	1-124-443-00	s	ELECT 100uF 20% 10V
C1063	1-163-037-11	s	CERAMIC, CHIP 0.022uF 10% 25V
C1066	1-124-443-00	s	ELECT 100uF 20% 10V
C1067	1-163-037-11	s	CERAMIC, CHIP 0.022uF 10% 25V
C1068	1-124-443-00	s	ELECT 100uF 20% 10V
C1069	1-163-037-11	s	CERAMIC, CHIP 0.022uF 10% 25V
C1070	1-124-443-00	s	ELECT 100uF 20% 10V
C1071	1-124-443-00	s	ELECT 100uF 20% 10V
C1072	1-163-037-11	s	CERAMIC, CHIP 0.022uF 10% 25V
C1073	1-124-443-00	s	ELECT 100uF 20% 10V
C1074	1-163-037-11	s	CERAMIC, CHIP 0.022uF 10% 25V
C1075	1-126-101-11	s	ELECT 100uF 20% 16V
C1076	1-126-101-11	s	ELECT 100uF 20% 16V
C1077	1-163-037-11	s	CERAMIC, CHIP 0.022uF 10% 25V
C1078	1-124-443-00	s	ELECT 100uF 20% 10V
C1079	1-163-037-11	s	CERAMIC, CHIP 0.022uF 10% 25V
C1101	1-163-037-11	s	CERAMIC, CHIP 0.022uF 10% 25V
C1102	1-163-037-11	s	CERAMIC, CHIP 0.022uF 10% 25V
C1103	1-163-037-11	s	CERAMIC, CHIP 0.022uF 10% 25V
C1104	1-163-037-11	s	CERAMIC, CHIP 0.022uF 10% 25V
C1105	1-124-443-00	s	ELECT 100uF 20% 10V
C1106	1-163-089-00	s	CERAMIC, CHIP 6PF 50V
C1107	1-163-037-11	s	CERAMIC, CHIP 0.022uF 10% 25V
C1108	1-124-443-00	s	ELECT 100uF 20% 10V
C1110	1-124-135-00	s	ELECT 470uF 20% 6.3V
C1111	1-163-037-11	s	CERAMIC, CHIP 0.022uF 10% 25V
C1112	1-163-037-11	s	CERAMIC, CHIP 0.022uF 10% 25V
C1113	1-163-037-11	s	CERAMIC, CHIP 0.022uF 10% 25V
C1114	1-163-037-11	s	CERAMIC, CHIP 0.022uF 10% 25V
C1115	1-163-091-00	s	CERAMIC, CHIP 8PF 50V
C1116	1-163-037-11	s	CERAMIC, CHIP 0.022uF 10% 25V
C1117	1-124-477-11	s	ELECT 47uF 20% 25V
C1118	1-164-004-11	s	CERAMIC, CHIP 0.1uF 10% 25V
C1119	1-163-037-11	s	CERAMIC, CHIP 0.022uF 10% 25V

(MDM-5P BOARD)

Ref. No. or Q'ty	Part No.	SP	Description
C1120	1-163-087-00	s	CERAMIC, CHIP 4PF 50V
C1121	1-163-037-11	s	CERAMIC, CHIP 0.022uF 10% 25V
C1122	1-163-037-11	s	CERAMIC, CHIP 0.022uF 10% 25V
C1123	1-163-237-11	s	CERAMIC, CHIP 27PF 5% 50V
C1124	1-163-037-11	s	CERAMIC, CHIP 0.022uF 10% 25V
C1125	1-163-037-11	s	CERAMIC, CHIP 0.022uF 10% 25V
C1127	1-124-443-00	s	ELECT 100uF 20% 10V
C1129	1-163-037-11	s	CERAMIC, CHIP 0.022uF 10% 25V
C1130	1-124-443-00	s	ELECT 100uF 20% 10V
C1131	1-163-037-11	s	CERAMIC, CHIP 0.022uF 10% 25V
C1132	1-124-443-00	s	ELECT 100uF 20% 10V
C1133	1-163-037-11	s	CERAMIC, CHIP 0.022uF 10% 25V
C1134	1-164-004-11	s	CERAMIC, CHIP 0.1uF 10% 25V
C1135	1-164-004-11	s	CERAMIC, CHIP 0.1uF 10% 25V
C1136	1-163-037-11	s	CERAMIC, CHIP 0.022uF 10% 25V
C1137	1-163-037-11	s	CERAMIC, CHIP 0.022uF 10% 25V
C1138	1-164-004-11	s	CERAMIC, CHIP 0.1uF 10% 25V
C1140	1-124-443-00	s	ELECT 100uF 20% 10V
C1141	1-163-037-11	s	CERAMIC, CHIP 0.022uF 10% 25V
C1142	1-163-105-00	s	CERAMIC, CHIP 33PF 5% 50V
C1143	1-163-102-00	s	CERAMIC, CHIP 24PF 5% 50V
C1144	1-164-004-11	s	CERAMIC, CHIP 0.1uF 10% 25V
C1145	1-163-037-11	s	CERAMIC, CHIP 0.022uF 10% 25V
C1146	1-163-037-11	s	CERAMIC, CHIP 0.022uF 10% 25V
C1147	1-163-263-11	s	CERAMIC, CHIP 330PF 5% 50V
C1148	1-163-263-11	s	CERAMIC, CHIP 330PF 5% 50V
C1149	1-124-443-00	s	ELECT 100uF 20% 10V
C1150	1-107-338-11	s	MICA 180PF 0.25% 100V
C1151	1-163-091-00	s	CERAMIC, CHIP 8PF 50V
C1152	1-163-091-00	s	CERAMIC, CHIP 8PF 50V
C1501	1-163-037-11	s	CERAMIC, CHIP 0.022uF 10% 25V
C1502	1-163-037-11	s	CERAMIC, CHIP 0.022uF 10% 25V
C1503	1-124-443-00	s	ELECT 100uF 20% 10V
C1504	1-124-443-00	s	ELECT 100uF 20% 10V
C1505	1-163-037-11	s	CERAMIC, CHIP 0.022uF 10% 25V
C1506	1-163-037-11	s	CERAMIC, CHIP 0.022uF 10% 25V
C1507	1-163-037-11	s	CERAMIC, CHIP 0.022uF 10% 25V
C1508	1-163-037-11	s	CERAMIC, CHIP 0.022uF 10% 25V
C1509	1-163-037-11	s	CERAMIC, CHIP 0.022uF 10% 25V
C1513	1-124-135-00	s	ELECT 470uF 20% 6.3V
C1514	1-163-037-11	s	CERAMIC, CHIP 0.022uF 10% 25V
C1515	1-163-037-11	s	CERAMIC, CHIP 0.022uF 10% 25V
C1517	1-107-338-11	s	MICA 180PF 0.25% 100V
C1518	1-163-091-00	s	CERAMIC, CHIP 8PF 50V
C1519	1-163-091-00	s	CERAMIC, CHIP 8PF 50V
C1520	1-163-091-00	s	CERAMIC, CHIP 8PF 50V
C1521	1-163-037-11	s	CERAMIC, CHIP 0.022uF 10% 25V
C1522	1-124-477-11	s	ELECT 47uF 20% 25V
C1523	1-124-443-00	s	ELECT 100uF 20% 10V
C1524	1-124-443-00	s	ELECT 100uF 20% 10V
C1525	1-124-443-00	s	ELECT 100uF 20% 10V
C1526	1-163-037-11	s	CERAMIC, CHIP 0.022uF 10% 25V
C1527	1-163-037-11	s	CERAMIC, CHIP 0.022uF 10% 25V
C1528	1-164-004-11	s	CERAMIC, CHIP 0.1uF 10% 25V
C1529	1-164-004-11	s	CERAMIC, CHIP 0.1uF 10% 25V
C1530	1-163-037-11	s	CERAMIC, CHIP 0.022uF 10% 25V
C1531	1-163-037-11	s	CERAMIC, CHIP 0.022uF 10% 25V
C1533	1-163-139-00	s	CERAMIC, CHIP 820PF 5% 50V
C1534	1-163-139-00	s	CERAMIC, CHIP 820PF 5% 50V

(MDM-5P BOARD)

Ref. No. or Q'ty	Part No.	SP	Description
C1535	1-164-004-11	s	CERAMIC, CHIP 0.1uF 10% 25V
C1536	1-163-037-11	s	CERAMIC, CHIP 0.022uF 10% 25V
C1537	1-163-037-11	s	CERAMIC, CHIP 0.022uF 10% 25V
C1538	1-164-004-11	s	CERAMIC, CHIP 0.1uF 10% 25V
C1539	1-163-037-11	s	CERAMIC, CHIP 0.022uF 10% 25V
C1540	1-124-443-00	s	ELECT 100uF 20% 10V
C1541	1-163-105-00	s	CERAMIC, CHIP 33PF 5% 50V
C1542	1-163-102-00	s	CERAMIC, CHIP 24PF 5% 50V
C1543	1-164-004-11	s	CERAMIC, CHIP 0.1uF 10% 25V
C1544	1-163-037-11	s	CERAMIC, CHIP 0.022uF 10% 25V
C1545	1-163-037-11	s	CERAMIC, CHIP 0.022uF 10% 25V
C1546	1-163-263-11	s	CERAMIC, CHIP 330PF 5% 50V
C1547	1-163-263-11	s	CERAMIC, CHIP 330PF 5% 50V
C1558	1-163-037-11	s	CERAMIC, CHIP 0.022uF 10% 25V
C1601	1-163-037-11	s	CERAMIC, CHIP 0.022uF 10% 25V
C1602	1-163-037-11	s	CERAMIC, CHIP 0.022uF 10% 25V
C1603	1-124-443-00	s	ELECT 100uF 20% 10V
C1604	1-124-443-00	s	ELECT 100uF 20% 10V
C1605	1-163-037-11	s	CERAMIC, CHIP 0.022uF 10% 25V
C1606	1-163-037-11	s	CERAMIC, CHIP 0.022uF 10% 25V
C1607	1-164-004-11	s	CERAMIC, CHIP 0.1uF 10% 25V
C1608	1-164-004-11	s	CERAMIC, CHIP 0.1uF 10% 25V
C1609	1-163-037-11	s	CERAMIC, CHIP 0.022uF 10% 25V
C1610	1-163-102-00	s	CERAMIC, CHIP 24PF 5% 50V
C1611	1-163-037-11	s	CERAMIC, CHIP 0.022uF 10% 25V
C1612	1-164-004-11	s	CERAMIC, CHIP 0.1uF 10% 25V
C1613	1-164-004-11	s	CERAMIC, CHIP 0.1uF 10% 25V
C1614	1-163-102-00	s	CERAMIC, CHIP 24PF 5% 50V
C1615	1-163-037-11	s	CERAMIC, CHIP 0.022uF 10% 25V
C1616	1-163-037-11	s	CERAMIC, CHIP 0.022uF 10% 25V
C1617	1-164-004-11	s	CERAMIC, CHIP 0.1uF 10% 25V
C1618	1-164-004-11	s	CERAMIC, CHIP 0.1uF 10% 25V
C1619	1-163-037-11	s	CERAMIC, CHIP 0.022uF 10% 25V
C1620	1-163-037-11	s	CERAMIC, CHIP 0.022uF 10% 25V
C1623	1-124-443-00	s	ELECT 100uF 20% 10V
C1624	1-163-037-11	s	CERAMIC, CHIP 0.022uF 10% 25V
C1625	1-164-004-11	s	CERAMIC, CHIP 0.1uF 10% 25V
C1626	1-163-037-11	s	CERAMIC, CHIP 0.022uF 10% 25V
C1627	1-163-088-00	s	CERAMIC, CHIP 5PF 50V
C1628	1-163-037-11	s	CERAMIC, CHIP 0.022uF 10% 25V
C1629	1-164-004-11	s	CERAMIC, CHIP 0.1uF 10% 25V
C1630	1-164-004-11	s	CERAMIC, CHIP 0.1uF 10% 25V
C1631	1-164-004-11	s	CERAMIC, CHIP 0.1uF 10% 25V
C1632	1-164-004-11	s	CERAMIC, CHIP 0.1uF 10% 25V
C1633	1-163-037-11	s	CERAMIC, CHIP 0.022uF 10% 25V
C1634	1-163-037-11	s	CERAMIC, CHIP 0.022uF 10% 25V
C1635	1-163-131-00	s	CERAMIC, CHIP 330PF 5% 50V
C1636	1-163-137-00	s	CERAMIC, CHIP 680PF 5% 50V
C1637	1-163-010-11	s	CERAMIC, CHIP 0.0012uF 10% 50V
C1638	1-163-010-11	s	CERAMIC, CHIP 0.0012uF 10% 50V
C1639	1-163-037-11	s	CERAMIC, CHIP 0.022uF 10% 25V
C1640	1-163-037-11	s	CERAMIC, CHIP 0.022uF 10% 25V
C1641	1-124-443-00	s	ELECT 100uF 20% 10V
CN130	1-573-600-21	s	CONNECTOR, PHEC 100P, MALE
CN132	1-573-600-21	s	CONNECTOR, PHEC 100P, MALE
CN901	1-506-484-11	s	CONNECTOR, 5P, MALE
CN902	1-506-489-11	s	CONNECTOR, 10P, MALE
CN1902	1-526-659-00	o	SOCKET, IC 28P

(MDM-5P BOARD)

Ref. No. or Q'ty	Part No.	SP	Description
COP101	1-563-859-11	s	PLUG, SHORTING
COP501	1-563-859-11	s	PLUG, SHORTING
COR101	1-566-388-11	s	CONNECTOR, 8P, MALE
COR102	1-566-388-11	s	CONNECTOR, 8P, MALE
COR501	1-566-388-11	s	CONNECTOR, 8P, MALE
COR502	1-566-388-11	s	CONNECTOR, 8P, MALE
D251	8-719-941-23	s	DIODE DA204U
D252	8-719-941-23	s	DIODE DA204U
D401	8-719-109-51	s	DIODE RD2.0ES-B2
D402	8-719-123-82	s	DIODE 1SS303-T1
D651	8-719-941-23	s	DIODE DA204U
D801	8-719-109-51	s	DIODE RD2.0ES-B2
D802	8-719-123-82	s	DIODE 1SS303-T1
D901	8-719-941-23	s	DIODE DA204U
FL101	1-415-854-11	s	DELAY LINE
FL102	1-415-855-11	s	FILTER (PHASE SHIFT)
FL103	1-415-674-11	s	DELAY LINE
FL401	1-239-158-11	s	FILTER, LOW-PASS
FL402	1-239-164-11	s	FILTER, LOW-PASS
FL403	1-239-161-11	s	FILTER, LOW-PASS
FL404	1-239-133-11	s	FILTER, LOW-PASS
FL501	1-415-852-11	s	DELAY LINE
FL502	1-415-855-11	s	FILTER (PHASE SHIFT)
FL503	1-415-853-11	s	DELAY LINE
FL801	1-239-159-11	s	FILTER, LOW-PASS
FL802	1-239-160-11	s	FILTER, LOW-PASS
FL803	1-239-133-11	s	FILTER, LOW-PASS
FL804	1-239-063-11	s	FILTER, LOW-PASS
FL1101	1-236-070-11	s	FILTER, LOW-PASS
FL1501	1-236-070-11	s	FILTER, LOW-PASS
FL1601	1-239-157-11	s	FILTER, BAND-PASS
FL1602	1-239-155-11	s	FILTER, BAND-PASS
FL1603	1-239-156-11	s	FILTER, BAND-PASS
FL1604	1-239-154-11	s	FILTER, BAND-PASS
HC1101	1-809-331-11	s	IC H8D7144E
HC1501	1-809-331-11	s	IC H8D7144E
IC101	8-759-982-21	s	IC RC78L05A
IC102	8-759-982-21	s	IC RC78L05A
IC103	8-752-052-73	s	IC CXA1451M
IC201	8-759-112-53	s	IC UPC1663G
IC251	8-759-300-71	s	IC HD14053BFP
IC252	8-759-926-19	s	IC SN74HC158ANS
IC253	8-759-908-17	s	IC TL082CPS
IC254	8-759-908-17	s	IC TL082CPS
IC255	8-752-052-75	s	IC CXA1479Q
IC256	8-752-052-77	s	IC CXA1450M
IC301	8-759-009-06	s	IC MC14052BF
IC302	8-759-927-46	s	IC SN74HC00NS
IC401	8-752-052-48	s	IC CXA1370Q
IC402	8-759-982-21	s	IC RC78L05A
IC403	8-759-908-17	s	IC TL082CPS
IC404	8-752-052-77	s	IC CXA1450M
IC405	8-759-035-93	s	IC TC7S32F-TE85L
IC406	1-809-541-11	s	IC H8D7132D
IC407	8-752-052-73	s	IC CXA1451M
IC409	8-759-982-21	s	IC RC78L05A

(MDM-5P BOARD)

Ref. No. or Q'ty	Part No.	SP	Description
IC410	8-759-982-44	s	IC RC78L05A
IC411	8-759-012-90	s	IC MC10H116M
IC412	8-752-054-80	s	IC CXA1521M
IC501	8-759-982-21	s	IC RC78L05A
IC502	8-759-982-21	s	IC RC78L05A
IC503	8-752-052-73	s	IC CXA1451M
IC651	8-759-908-17	s	IC TL082CPS
IC652	8-752-052-75	s	IC CXA1479Q
IC653	8-759-300-71	s	IC HD14053BFP
IC701	8-759-009-06	s	IC MC14052BF
IC702	8-759-927-46	s	IC SN74HC00NS
IC801	8-752-052-48	s	IC CXA1370Q
IC802	8-759-982-21	s	IC RC78L05A
IC803	8-752-052-73	s	IC CXA1451M
IC804	1-809-541-11	s	IC H8D7132D
IC805	8-752-054-80	s	IC CXA1521M
IC807	8-759-035-93	s	IC TC7S32F-TE85L
IC809	8-759-982-21	s	IC RC78L05A
IC810	8-759-982-44	s	IC RC78L05A
IC811	8-759-012-90	s	IC MC10H116M
IC901	8-759-939-14	s	IC MC68HC11E1FU
IC902	8-759-748-48	s	IC TMS27C256-20JL
IC903	8-759-926-66	s	IC SN74HC373NS
IC904	8-759-926-11	s	IC SN74HC138NS
IC905	8-759-938-68	s	IC CXD1095Q
IC906	8-759-635-27	s	IC M62352GP
IC907	8-759-635-27	s	IC M62352GP
IC909	8-759-300-71	s	IC HD14053BFP
IC910	8-759-300-71	s	IC HD14053BFP
IC911	8-759-300-71	s	IC HD14053BFP
IC912	8-759-926-48	s	IC SN74HC244NS
IC913	8-759-925-85	s	IC SN74HC32NS
IC914	8-759-940-45	s	IC S-8054HN-CB
IC915	8-759-939-41	s	IC S-8123AG-EB
IC916	8-759-982-21	s	IC RC78L05A
IC917	8-759-925-72	s	IC SN74HC02NS
IC918	8-759-008-75	s	IC MC14002BF
IC919	8-759-925-83	s	IC SN74HC27ANS
IC920	8-759-009-03	s	IC MC14049UBF
IC921	8-759-925-76	s	IC SN74HC08NS
IC922	8-759-009-04	s	IC MC14050BF
IC923	8-759-009-04	s	IC MC14050BF
IC1051	8-759-982-18	s	IC RC7809FA
IC1052	8-759-982-05	s	IC RC7805FA
IC1054	8-759-982-05	s	IC RC7805FA
IC1055	8-759-982-38	s	IC UPC7905H
IC1056	8-759-982-39	s	IC RC7909FA
IC1101	8-759-300-71	s	IC HD14053BFP
IC1103	8-759-300-71	s	IC HD14053BFP
IC1104	8-752-052-76	s	IC CXA1480Q
IC1105	8-752-052-73	s	IC CXA1451M
IC1106	8-759-925-74	s	IC SN74HC04NS
IC1107	8-759-925-72	s	IC SN74HC02NS
IC1108	1-809-333-11	s	IC H8D7151
IC1501	8-759-300-71	s	IC HD14053BFP
IC1502	8-752-054-80	s	IC CXA1521M
IC1503	8-752-052-73	s	IC CXA1451M
IC1504	8-752-052-73	s	IC CXA1451M
IC1601	8-759-300-71	s	IC HD14053BFP

(MDM-5P BOARD)

Ref. No. or Q'ty	Part No.	SP	Description
IC1602	8-759-112-53	S	IC UPC1663G
IC1603	8-759-112-53	S	IC UPC1663G
IC1604	8-759-009-05	S	IC MC14051BF
IC1605	8-759-300-71	S	IC HD14053BFP
IC1606	8-759-112-53	S	IC UPC1663G
IC1607	8-759-981-51	S	IC RC1496M
IC1608	8-759-014-29	S	IC MC34184M
L1	1-408-406-00	S	INDUCTOR 5.6uH
L2	1-408-406-00	S	INDUCTOR 5.6uH
L5	1-408-408-00	S	INDUCTOR 8.2uH
L6	1-408-406-00	S	INDUCTOR 5.6uH
L21	1-410-468-11	S	INDUCTOR 6.8uH
L22	1-410-468-11	S	INDUCTOR 6.8uH
L25	1-408-408-00	S	INDUCTOR 8.2uH
L26	1-408-408-00	S	INDUCTOR 8.2uH
L51	1-410-468-11	S	INDUCTOR 6.8uH
L52	1-410-468-11	S	INDUCTOR 6.8uH
L53	1-408-429-00	S	INDUCTOR 470uH
L54	1-408-429-00	S	INDUCTOR 470uH
L55	1-408-408-00	S	INDUCTOR 8.2uH
L56	1-408-408-00	S	INDUCTOR 8.2uH
L71	1-408-408-00	S	INDUCTOR 8.2uH
L72	1-408-408-00	S	INDUCTOR 8.2uH
L75	1-408-408-00	S	INDUCTOR 8.2uH
L76	1-408-408-00	S	INDUCTOR 8.2uH
L101	1-410-470-11	S	INDUCTOR 10uH
L102	1-410-470-11	S	INDUCTOR 10uH
L103	1-410-470-11	S	INDUCTOR 10uH
L201	1-410-462-11	S	INDUCTOR 2.2uH
L202	1-410-470-11	S	INDUCTOR 10uH
L203	1-410-460-11	S	INDUCTOR 1.5uH
L204	1-408-387-00	S	INDUCTOR 1uH
L205	1-408-411-00	S	INDUCTOR 15uH
L206	1-410-466-41	S	INDUCTOR 4.7uH
L207	1-408-404-00	S	INDUCTOR 3.9uH
L208	1-408-408-00	S	INDUCTOR 8.2uH
L209	1-410-461-41	S	INDUCTOR 1.8uH
L210	1-410-478-11	S	INDUCTOR 47uH
L211	1-410-470-11	S	INDUCTOR 10uH
L212	1-410-464-11	S	INDUCTOR 3.3uH
L251	1-410-460-11	S	INDUCTOR 1.5uH
L252	1-410-460-11	S	INDUCTOR 1.5uH
L253	1-410-116-11	S	INDUCTOR 560UH
L301	1-410-470-11	S	INDUCTOR 10uH
L302	1-410-471-11	S	INDUCTOR 12uH
L303	1-410-482-31	S	INDUCTOR 100uH
L401	1-408-429-00	S	INDUCTOR 470uH
L402	1-410-494-11	S	INDUCTOR 1MMH
L403	1-410-482-31	S	INDUCTOR 100uH
L404	1-410-482-31	S	INDUCTOR 100uH
L405	1-410-482-31	S	INDUCTOR 100uH
L406	1-410-482-31	S	INDUCTOR 100uH
L407	1-410-482-31	S	INDUCTOR 100uH
L501	1-410-470-11	S	INDUCTOR 10uH
L502	1-410-470-11	S	INDUCTOR 10uH
L503	1-410-470-11	S	INDUCTOR 10uH
L651	1-410-460-11	S	INDUCTOR 1.5uH
L652	1-410-460-11	S	INDUCTOR 1.5uH

(MDM-5P BOARD)

Ref. No. or Q'ty	Part No.	SP	Description
L653	1-410-116-11	S	INDUCTOR 560UH
L701	1-410-470-11	S	INDUCTOR 10uH
L704	1-408-411-00	S	INDUCTOR 15uH
L705	1-410-482-31	S	INDUCTOR 100uH
L801	1-410-482-31	S	INDUCTOR 100uH
L802	1-410-482-31	S	INDUCTOR 100uH
L803	1-410-482-31	S	INDUCTOR 100uH
L804	1-410-482-31	S	INDUCTOR 100uH
L805	1-410-482-31	S	INDUCTOR 100uH
L1051	1-412-533-11	S	INDUCTOR 47uH
L1052	1-412-533-11	S	INDUCTOR 47uH
L1053	1-412-533-11	S	INDUCTOR 47uH
L1054	1-412-533-11	S	INDUCTOR 47uH
L1055	1-412-533-11	S	INDUCTOR 47uH
L1056	1-412-533-11	S	INDUCTOR 47uH
L1101	1-410-482-31	S	INDUCTOR 100uH
L1102	1-410-482-31	S	INDUCTOR 100uH
L1103	1-410-464-11	S	INDUCTOR 3.3uH
L1104	1-410-470-11	S	INDUCTOR 10uH
L1105	1-410-470-11	S	INDUCTOR 10uH
L1106	1-410-470-11	S	INDUCTOR 10uH
L1107	1-410-478-11	S	INDUCTOR 47uH
L1501	1-410-482-31	S	INDUCTOR 100uH
L1502	1-410-482-31	S	INDUCTOR 100uH
L1504	1-410-464-11	S	INDUCTOR 3.3uH
L1505	1-410-470-11	S	INDUCTOR 10uH
L1506	1-410-470-11	S	INDUCTOR 10uH
L1507	1-408-425-00	S	INDUCTOR 220uH
L1508	1-410-470-11	S	INDUCTOR 10uH
L1509	1-410-478-11	S	INDUCTOR 47uH
L1601	1-410-470-11	S	INDUCTOR 10uH
L1602	1-410-470-11	S	INDUCTOR 10uH
L1603	1-407-496-00	S	INDUCTOR 2.2mH
L1604	1-407-496-00	S	INDUCTOR 2.2mH
L1605	1-410-470-11	S	INDUCTOR 10uH
Q1	8-729-117-72	S	TRANSISTOR 2SC4178
Q2	8-729-117-72	S	TRANSISTOR 2SC4178
Q3	8-729-143-07	S	TRANSISTOR 2SA1610-Y33
Q4	8-729-117-72	S	TRANSISTOR 2SC4178
Q21	8-729-117-72	S	TRANSISTOR 2SC4178
Q22	8-729-117-72	S	TRANSISTOR 2SC4178
Q23	8-729-143-07	S	TRANSISTOR 2SA1610-Y33
Q24	8-729-117-72	S	TRANSISTOR 2SC4178
Q51	8-729-117-72	S	TRANSISTOR 2SC4178
Q52	8-729-117-72	S	TRANSISTOR 2SC4178
Q53	8-729-143-07	S	TRANSISTOR 2SA1610-Y33
Q54	8-729-117-72	S	TRANSISTOR 2SC4178
Q71	8-729-117-72	S	TRANSISTOR 2SC4178
Q72	8-729-117-72	S	TRANSISTOR 2SC4178
Q73	8-729-143-07	S	TRANSISTOR 2SA1610-Y33
Q74	8-729-117-72	S	TRANSISTOR 2SC4178
Q101	8-729-117-72	S	TRANSISTOR 2SC4178
Q102	8-729-117-72	S	TRANSISTOR 2SC4178
Q103	8-729-117-72	S	TRANSISTOR 2SC4178
Q104	8-729-117-72	S	TRANSISTOR 2SC4178
Q105	8-729-143-07	S	TRANSISTOR 2SA1610-Y33
Q106	8-729-117-72	S	TRANSISTOR 2SC4178
Q107	8-729-143-07	S	TRANSISTOR 2SA1610-Y33
Q108	8-729-117-72	S	TRANSISTOR 2SC4178

(MDM-5P BOARD)

Ref. No. or Q'ty	Part No.	SP	Description
Q109	8-729-117-72	s	TRANSISTOR 2SC4178
Q110	8-729-143-07	s	TRANSISTOR 2SA1610-Y33
Q111	8-729-117-72	s	TRANSISTOR 2SC4178
Q112	8-729-117-72	s	TRANSISTOR 2SC4178
Q113	8-729-117-72	s	TRANSISTOR 2SC4178
Q114	8-729-117-72	s	TRANSISTOR 2SC4178
Q115	8-729-905-18	s	TRANSISTOR DTC144EU
Q201	8-729-117-72	s	TRANSISTOR 2SC4178
Q202	8-729-209-07	s	TRANSISTOR 2SC4213-B
Q203	8-729-209-07	s	TRANSISTOR 2SC4213-B
Q204	8-729-209-07	s	TRANSISTOR 2SC4213-B
Q205	8-729-209-07	s	TRANSISTOR 2SC4213-B
Q206	8-729-209-07	s	TRANSISTOR 2SC4213-B
Q207	8-729-209-07	s	TRANSISTOR 2SC4213-B
Q208	8-729-117-72	s	TRANSISTOR 2SC4178
Q209	8-729-117-72	s	TRANSISTOR 2SC4178
Q210	8-729-905-12	s	TRANSISTOR DTA144EU
Q211	8-729-143-07	s	TRANSISTOR 2SA1610-Y33
Q212	8-729-117-72	s	TRANSISTOR 2SC4178
Q213	8-729-905-12	s	TRANSISTOR DTA144EU
Q214	8-729-143-07	s	TRANSISTOR 2SA1610-Y33
Q215	8-729-117-72	s	TRANSISTOR 2SC4178
Q216	8-729-143-07	s	TRANSISTOR 2SA1610-Y33
Q217	8-729-905-12	s	TRANSISTOR DTA144EU
Q218	8-729-117-72	s	TRANSISTOR 2SC4178
Q219	8-729-117-72	s	TRANSISTOR 2SC4178
Q220	8-729-117-72	s	TRANSISTOR 2SC4178
Q221	8-729-117-72	s	TRANSISTOR 2SC4178
Q251	8-729-117-72	s	TRANSISTOR 2SC4178
Q252	8-729-117-72	s	TRANSISTOR 2SC4178
Q253	8-729-117-72	s	TRANSISTOR 2SC4178
Q301	8-729-117-72	s	TRANSISTOR 2SC4178
Q302	8-729-143-07	s	TRANSISTOR 2SA1610-Y33
Q303	8-729-140-63	s	TRANSISTOR 2SA1611-M5M6
Q304	8-729-117-72	s	TRANSISTOR 2SC4178
Q305	8-729-143-07	s	TRANSISTOR 2SA1610-Y33
Q306	8-729-140-63	s	TRANSISTOR 2SA1611-M5M6
Q307	8-729-117-72	s	TRANSISTOR 2SC4178
Q308	8-729-143-07	s	TRANSISTOR 2SA1610-Y33
Q309	8-729-140-63	s	TRANSISTOR 2SA1611-M5M6
Q310	8-729-117-72	s	TRANSISTOR 2SC4178
Q311	8-729-143-07	s	TRANSISTOR 2SA1610-Y33
Q312	8-729-140-63	s	TRANSISTOR 2SA1611-M5M6
Q313	8-729-117-72	s	TRANSISTOR 2SC4178
Q314	8-729-143-07	s	TRANSISTOR 2SA1610-Y33
Q315	8-729-140-63	s	TRANSISTOR 2SA1611-M5M6
Q401	8-729-140-63	s	TRANSISTOR 2SA1611-M5M6
Q402	8-729-117-32	s	TRANSISTOR 2SC4177
Q403	8-729-117-32	s	TRANSISTOR 2SC4177
Q404	8-729-117-72	s	TRANSISTOR 2SC4178
Q405	8-729-140-63	s	TRANSISTOR 2SA1611-M5M6
Q406	8-729-117-32	s	TRANSISTOR 2SC4177
Q407	8-729-117-32	s	TRANSISTOR 2SC4177
Q408	8-729-117-32	s	TRANSISTOR 2SC4177
Q409	8-729-117-32	s	TRANSISTOR 2SC4177
Q410	8-729-117-32	s	TRANSISTOR 2SC4177
Q411	8-729-117-32	s	TRANSISTOR 2SC4177
Q412	8-729-117-32	s	TRANSISTOR 2SC4177
Q413	8-729-905-18	s	TRANSISTOR DTC144EU

(MDM-5P BOARD)

Ref. No. or Q'ty	Part No.	SP	Description
Q414	8-729-117-32	s	TRANSISTOR 2SC4177
Q415	8-729-117-32	s	TRANSISTOR 2SC4177
Q416	8-729-905-18	s	TRANSISTOR DTC144EU
Q418	8-729-140-63	s	TRANSISTOR 2SA1611-M5M6
Q501	8-729-117-72	s	TRANSISTOR 2SC4178
Q502	8-729-117-72	s	TRANSISTOR 2SC4178
Q503	8-729-117-72	s	TRANSISTOR 2SC4178
Q504	8-729-117-72	s	TRANSISTOR 2SC4178
Q505	8-729-143-07	s	TRANSISTOR 2SA1610-Y33
Q506	8-729-117-72	s	TRANSISTOR 2SC4178
Q507	8-729-143-07	s	TRANSISTOR 2SA1610-Y33
Q508	8-729-117-72	s	TRANSISTOR 2SC4178
Q509	8-729-117-72	s	TRANSISTOR 2SC4178
Q510	8-729-143-07	s	TRANSISTOR 2SA1610-Y33
Q511	8-729-117-72	s	TRANSISTOR 2SC4178
Q512	8-729-117-72	s	TRANSISTOR 2SC4178
Q513	8-729-117-72	s	TRANSISTOR 2SC4178
Q514	8-729-117-72	s	TRANSISTOR 2SC4178
Q515	8-729-905-18	s	TRANSISTOR DTC144EU
Q651	8-729-117-72	s	TRANSISTOR 2SC4178
Q652	8-729-117-72	s	TRANSISTOR 2SC4178
Q653	8-729-117-72	s	TRANSISTOR 2SC4178
Q702	8-729-117-72	s	TRANSISTOR 2SC4178
Q703	8-729-143-07	s	TRANSISTOR 2SA1610-Y33
Q704	8-729-140-63	s	TRANSISTOR 2SA1611-M5M6
Q705	8-729-117-72	s	TRANSISTOR 2SC4178
Q706	8-729-143-07	s	TRANSISTOR 2SA1610-Y33
Q707	8-729-140-63	s	TRANSISTOR 2SA1611-M5M6
Q708	8-729-117-72	s	TRANSISTOR 2SC4178
Q709	8-729-143-07	s	TRANSISTOR 2SA1610-Y33
Q710	8-729-140-63	s	TRANSISTOR 2SA1611-M5M6
Q711	8-729-117-72	s	TRANSISTOR 2SC4178
Q712	8-729-143-07	s	TRANSISTOR 2SA1610-Y33
Q713	8-729-140-63	s	TRANSISTOR 2SA1611-M5M6
Q801	8-729-140-63	s	TRANSISTOR 2SA1611-M5M6
Q802	8-729-117-32	s	TRANSISTOR 2SC4177
Q803	8-729-117-32	s	TRANSISTOR 2SC4177
Q804	8-729-117-32	s	TRANSISTOR 2SC4177
Q805	8-729-140-63	s	TRANSISTOR 2SA1611-M5M6
Q806	8-729-140-63	s	TRANSISTOR 2SA1611-M5M6
Q807	8-729-117-32	s	TRANSISTOR 2SC4177
Q808	8-729-117-32	s	TRANSISTOR 2SC4177
Q809	8-729-117-72	s	TRANSISTOR 2SC4178
Q810	8-729-140-63	s	TRANSISTOR 2SA1611-M5M6
Q811	8-729-117-32	s	TRANSISTOR 2SC4177
Q812	8-729-117-32	s	TRANSISTOR 2SC4177
Q813	8-729-117-32	s	TRANSISTOR 2SC4177
Q814	8-729-117-32	s	TRANSISTOR 2SC4177
Q815	8-729-117-32	s	TRANSISTOR 2SC4177
Q816	8-729-117-32	s	TRANSISTOR 2SC4177
Q817	8-729-117-32	s	TRANSISTOR 2SC4177
Q818	8-729-140-63	s	TRANSISTOR 2SA1611-M5M6
Q820	8-729-905-18	s	TRANSISTOR DTC144EU
Q821	8-729-117-32	s	TRANSISTOR 2SC4177
Q822	8-729-117-32	s	TRANSISTOR 2SC4177
Q1101	8-729-140-63	s	TRANSISTOR 2SA1611-M5M6
Q1102	8-729-117-32	s	TRANSISTOR 2SC4177
Q1103	8-729-140-63	s	TRANSISTOR 2SA1611-M5M6
Q1104	8-729-202-38	s	TRANSISTOR 2SC3326N

(MDM-5P BOARD)

Ref. No. or Q'ty	Part No.	SP	Description
Q1105	8-729-202-38	s	TRANSISTOR 2SC3326N
Q1106	8-729-202-38	s	TRANSISTOR 2SC3326N
Q1107	8-729-905-18	s	TRANSISTOR DTC144EU
Q1108	8-729-117-32	s	TRANSISTOR 2SC4177
Q1110	8-729-905-18	s	TRANSISTOR DTC144EU
Q1111	8-729-117-72	s	TRANSISTOR 2SC4178
Q1112	8-729-117-72	s	TRANSISTOR 2SC4178
Q1113	8-729-117-72	s	TRANSISTOR 2SC4178
Q1114	8-729-202-38	s	TRANSISTOR 2SC3326N
Q1115	8-729-117-72	s	TRANSISTOR 2SC4178
Q1116	8-729-140-63	s	TRANSISTOR 2SA1611-M5M6
Q1117	8-729-117-72	s	TRANSISTOR 2SC4178
Q1118	8-729-117-72	s	TRANSISTOR 2SC4178
Q1119	8-729-140-63	s	TRANSISTOR 2SA1611-M5M6
Q1120	8-729-117-72	s	TRANSISTOR 2SC4178
Q1121	8-729-117-72	s	TRANSISTOR 2SC4178
Q1501	8-729-140-63	s	TRANSISTOR 2SA1611-M5M6
Q1502	8-729-117-32	s	TRANSISTOR 2SC4177
Q1503	8-729-901-01	s	TRANSISTOR DTC144EK
Q1504	8-729-117-32	s	TRANSISTOR 2SC4177
Q1505	8-729-140-63	s	TRANSISTOR 2SA1611-M5M6
Q1506	8-729-202-38	s	TRANSISTOR 2SC3326N
Q1507	8-729-202-38	s	TRANSISTOR 2SC3326N
Q1508	8-729-905-18	s	TRANSISTOR DTC144EU
Q1509	8-729-117-32	s	TRANSISTOR 2SC4177
Q1510	8-729-117-72	s	TRANSISTOR 2SC4178
Q1511	8-729-117-72	s	TRANSISTOR 2SC4178
Q1512	8-729-117-72	s	TRANSISTOR 2SC4178
Q1513	8-729-117-72	s	TRANSISTOR 2SC4178
Q1514	8-729-140-63	s	TRANSISTOR 2SA1611-M5M6
Q1515	8-729-117-72	s	TRANSISTOR 2SC4178
Q1516	8-729-202-38	s	TRANSISTOR 2SC3326N
Q1517	8-729-117-72	s	TRANSISTOR 2SC4178
Q1518	8-729-140-63	s	TRANSISTOR 2SA1611-M5M6
Q1519	8-729-117-72	s	TRANSISTOR 2SC4178
Q1520	8-729-117-72	s	TRANSISTOR 2SC4178
Q1521	8-729-140-63	s	TRANSISTOR 2SA1611-M5M6
Q1522	8-729-117-72	s	TRANSISTOR 2SC4178
Q1523	8-729-117-72	s	TRANSISTOR 2SC4178
Q1601	8-729-117-72	s	TRANSISTOR 2SC4178
Q1602	8-729-117-72	s	TRANSISTOR 2SC4178
Q1603	8-729-117-72	s	TRANSISTOR 2SC4178
Q1604	8-729-117-72	s	TRANSISTOR 2SC4178
Q1605	8-729-117-72	s	TRANSISTOR 2SC4178
Q1606	8-729-117-72	s	TRANSISTOR 2SC4178
Q1607	8-729-117-72	s	TRANSISTOR 2SC4178
Q1608	8-729-117-72	s	TRANSISTOR 2SC4178
Q1609	8-729-117-72	s	TRANSISTOR 2SC4178
Q1610	8-729-117-72	s	TRANSISTOR 2SC4178
Q1611	8-729-117-72	s	TRANSISTOR 2SC4178
Q1612	8-729-117-72	s	TRANSISTOR 2SC4178
Q1613	8-729-117-72	s	TRANSISTOR 2SC4178
Q1614	8-729-117-72	s	TRANSISTOR 2SC4178
Q1615	8-729-117-72	s	TRANSISTOR 2SC4178
Q1616	8-729-117-72	s	TRANSISTOR 2SC4178
Q1629	8-729-143-07	s	TRANSISTOR 2SA1610-Y33
Q1630	8-729-143-07	s	TRANSISTOR 2SA1610-Y33
Q1631	8-729-143-07	s	TRANSISTOR 2SA1610-Y33
Q1632	8-729-117-72	s	TRANSISTOR 2SC4178

(MDM-5P BOARD)

Ref. No. or Q'ty	Part No.	SP	Description
Q1633	8-729-117-72	s	TRANSISTOR 2SC4178
Q1634	8-729-117-72	s	TRANSISTOR 2SC4178
R1	1-216-638-11	s	METAL, CHIP 300 0.5% 1/10W
R2	1-216-638-11	s	METAL, CHIP 300 0.5% 1/10W
R3	1-216-025-00	s	METAL, CHIP 100 5% 1/10W
R4	1-216-065-00	s	METAL, CHIP 4.7K 5% 1/10W
R5	1-216-025-00	s	METAL, CHIP 100 5% 1/10W
R6	1-216-025-00	s	METAL, CHIP 100 5% 1/10W
R7	1-216-644-11	s	METAL, CHIP 510 0.5% 1/10W
R8	1-216-642-11	s	METAL, CHIP 430 0.5% 1/10W
R9	1-216-041-00	s	METAL, CHIP 470 5% 1/10W
R10	1-216-025-00	s	METAL, CHIP 100 5% 1/10W
R11	1-216-065-00	s	METAL, CHIP 4.7K 5% 1/10W
R12	1-216-640-11	s	METAL, CHIP 360 0.5% 1/10W
R13	1-216-025-00	s	METAL, CHIP 100 5% 1/10W
R14	1-216-644-11	s	METAL, CHIP 510 0.5% 1/10W
R15	1-216-025-00	s	METAL, CHIP 100 5% 1/10W
R16	1-216-041-00	s	METAL, CHIP 470 5% 1/10W
R17	1-216-025-00	s	METAL, CHIP 100 5% 1/10W
R21	1-216-638-11	s	METAL, CHIP 300 0.5% 1/10W
R22	1-216-638-11	s	METAL, CHIP 300 0.5% 1/10W
R23	1-216-025-00	s	METAL, CHIP 100 5% 1/10W
R24	1-216-065-00	s	METAL, CHIP 4.7K 5% 1/10W
R25	1-216-025-00	s	METAL, CHIP 100 5% 1/10W
R26	1-216-025-00	s	METAL, CHIP 100 5% 1/10W
R27	1-216-644-11	s	METAL, CHIP 510 0.5% 1/10W
R28	1-216-642-11	s	METAL, CHIP 430 0.5% 1/10W
R29	1-216-041-00	s	METAL, CHIP 470 5% 1/10W
R30	1-216-025-00	s	METAL, CHIP 100 5% 1/10W
R31	1-216-065-00	s	METAL, CHIP 4.7K 5% 1/10W
R32	1-216-025-00	s	METAL, CHIP 100 5% 1/10W
R33	1-216-025-00	s	METAL, CHIP 100 5% 1/10W
R34	1-216-644-11	s	METAL, CHIP 510 0.5% 1/10W
R35	1-216-640-11	s	METAL, CHIP 360 0.5% 1/10W
R36	1-216-041-00	s	METAL, CHIP 470 5% 1/10W
R37	1-216-025-00	s	METAL, CHIP 100 5% 1/10W
R51	1-216-638-11	s	METAL, CHIP 300 0.5% 1/10W
R52	1-216-638-11	s	METAL, CHIP 300 0.5% 1/10W
R53	1-216-025-00	s	METAL, CHIP 100 5% 1/10W
R54	1-216-065-00	s	METAL, CHIP 4.7K 5% 1/10W
R55	1-216-025-00	s	METAL, CHIP 100 5% 1/10W
R56	1-216-025-00	s	METAL, CHIP 100 5% 1/10W
R57	1-216-644-11	s	METAL, CHIP 510 0.5% 1/10W
R58	1-216-642-11	s	METAL, CHIP 430 0.5% 1/10W
R59	1-216-041-00	s	METAL, CHIP 470 5% 1/10W
R60	1-216-025-00	s	METAL, CHIP 100 5% 1/10W
R61	1-216-065-00	s	METAL, CHIP 4.7K 5% 1/10W
R62	1-216-025-00	s	METAL, CHIP 100 5% 1/10W
R63	1-216-025-00	s	METAL, CHIP 100 5% 1/10W
R64	1-216-644-11	s	METAL, CHIP 510 0.5% 1/10W
R65	1-216-640-11	s	METAL, CHIP 360 0.5% 1/10W
R66	1-216-041-00	s	METAL, CHIP 470 5% 1/10W
R67	1-216-025-00	s	METAL, CHIP 100 5% 1/10W
R71	1-216-638-11	s	METAL, CHIP 300 0.5% 1/10W
R72	1-216-638-11	s	METAL, CHIP 300 0.5% 1/10W
R73	1-216-025-00	s	METAL, CHIP 100 5% 1/10W
R74	1-216-065-00	s	METAL, CHIP 4.7K 5% 1/10W
R75	1-216-025-00	s	METAL, CHIP 100 5% 1/10W

(MDM-5P BOARD)

Ref. No. or Q'ty	Part No.	SP Description
R76	1-216-025-00	s METAL, CHIP 100 5% 1/10W
R77	1-216-644-11	s METAL, CHIP 510 0.5% 1/10W
R78	1-216-642-11	s METAL, CHIP 430 0.5% 1/10W
R79	1-216-041-00	s METAL, CHIP 470 5% 1/10W
R80	1-216-025-00	s METAL, CHIP 100 5% 1/10W
R81	1-216-065-00	s METAL, CHIP 4.7K 5% 1/10W
R82	1-216-025-00	s METAL, CHIP 100 5% 1/10W
R83	1-216-025-00	s METAL, CHIP 100 5% 1/10W
R84	1-216-644-11	s METAL, CHIP 510 0.5% 1/10W
R85	1-216-640-11	s METAL, CHIP 360 0.5% 1/10W
R86	1-216-041-00	s METAL, CHIP 470 5% 1/10W
R87	1-216-025-00	s METAL, CHIP 100 5% 1/10W
R101	1-216-634-11	s METAL, CHIP 200 0.5% 1/10W
R102	1-216-627-11	s METAL, CHIP 100 0.5% 1/10W
R103	1-216-073-00	s METAL, CHIP 10K 5% 1/10W
R104	1-216-049-00	s METAL, CHIP 1K 5% 1/10W
R105	1-216-073-00	s METAL, CHIP 10K 5% 1/10W
R108	1-216-651-11	s METAL, CHIP 1K 0.5% 1/10W
R109	1-216-651-11	s METAL, CHIP 1K 0.5% 1/10W
R110	1-216-025-00	s METAL, CHIP 100 5% 1/10W
R111	1-216-059-00	s METAL, CHIP 2.7K 5% 1/10W
R112	1-216-635-11	s METAL, CHIP 220 0.5% 1/10W
R113	1-216-065-00	s METAL, CHIP 4.7K 5% 1/10W
R114	1-216-037-00	s METAL, CHIP 330 5% 1/10W
R115	1-216-037-00	s METAL, CHIP 330 5% 1/10W
R116	1-216-065-00	s METAL, CHIP 4.7K 5% 1/10W
R117	1-216-065-00	s METAL, CHIP 4.7K 5% 1/10W
R118	1-216-057-00	s METAL, CHIP 2.2K 5% 1/10W
R119	1-216-624-11	s METAL, CHIP 75 0.5% 1/10W
R120	1-216-025-00	s METAL, CHIP 100 5% 1/10W
R121	1-216-025-00	s METAL, CHIP 100 5% 1/10W
R122	1-216-061-00	s METAL, CHIP 3.3K 5% 1/10W
R123	1-216-065-00	s METAL, CHIP 4.7K 5% 1/10W
R128	1-216-025-00	s METAL, CHIP 100 5% 1/10W
R129	1-216-025-00	s METAL, CHIP 100 5% 1/10W
R130	1-216-061-00	s METAL, CHIP 3.3K 5% 1/10W
R131	1-216-065-00	s METAL, CHIP 4.7K 5% 1/10W
R132	1-216-073-00	s METAL, CHIP 10K 5% 1/10W
R133	1-216-025-00	s METAL, CHIP 100 5% 1/10W
R134	1-216-025-00	s METAL, CHIP 100 5% 1/10W
R135	1-216-057-00	s METAL, CHIP 2.2K 5% 1/10W
R136	1-216-025-00	s METAL, CHIP 100 5% 1/10W
R137	1-216-635-11	s METAL, CHIP 220 0.5% 1/10W
R138	1-216-025-00	s METAL, CHIP 100 5% 1/10W
R139	1-216-635-11	s METAL, CHIP 220 0.5% 1/10W
R140	1-216-025-00	s METAL, CHIP 100 5% 1/10W
R141	1-216-065-00	s METAL, CHIP 4.7K 5% 1/10W
R142	1-216-049-00	s METAL, CHIP 1K 5% 1/10W
R143	1-216-635-11	s METAL, CHIP 220 0.5% 1/10W
R144	1-216-037-00	s METAL, CHIP 330 5% 1/10W
R145	1-216-037-00	s METAL, CHIP 330 5% 1/10W
R146	1-216-065-00	s METAL, CHIP 4.7K 5% 1/10W
R147	1-216-065-00	s METAL, CHIP 4.7K 5% 1/10W
R148	1-216-049-00	s METAL, CHIP 1K 5% 1/10W
R149	1-216-049-00	s METAL, CHIP 1K 5% 1/10W
R150	1-216-009-00	s METAL, CHIP 22 5% 1/10W
R151	1-216-009-00	s METAL, CHIP 22 5% 1/10W
R152	1-216-057-00	s METAL, CHIP 2.2K 5% 1/10W
R153	1-216-057-00	s METAL, CHIP 2.2K 5% 1/10W

(MDM-5P BOARD)

Ref. No. or Q'ty	Part No.	SP Description
R154	1-216-009-00	s METAL, CHIP 22 5% 1/10W
R155	1-216-009-00	s METAL, CHIP 22 5% 1/10W
R157	1-216-073-00	s METAL, CHIP 10K 5% 1/10W
R158	1-216-049-00	s METAL, CHIP 1K 5% 1/10W
R201	1-216-037-00	s METAL, CHIP 330 5% 1/10W
R202	1-216-049-00	s METAL, CHIP 1K 5% 1/10W
R203	1-216-049-00	s METAL, CHIP 1K 5% 1/10W
R204	1-216-037-00	s METAL, CHIP 330 5% 1/10W
R205	1-216-025-00	s METAL, CHIP 100 5% 1/10W
R206	1-216-049-00	s METAL, CHIP 1K 5% 1/10W
R207	1-216-638-11	s METAL, CHIP 300 0.5% 1/10W
R208	1-216-073-00	s METAL, CHIP 10K 5% 1/10W
R209	1-216-073-00	s METAL, CHIP 10K 5% 1/10W
R210	1-216-073-00	s METAL, CHIP 10K 5% 1/10W
R211	1-216-073-00	s METAL, CHIP 10K 5% 1/10W
R212	1-216-073-00	s METAL, CHIP 10K 5% 1/10W
R213	1-216-073-00	s METAL, CHIP 10K 5% 1/10W
R214	1-216-025-00	s METAL, CHIP 100 5% 1/10W
R215	1-216-638-11	s METAL, CHIP 300 0.5% 1/10W
R216	1-216-065-00	s METAL, CHIP 4.7K 5% 1/10W
R217	1-216-073-00	s METAL, CHIP 10K 5% 1/10W
R218	1-216-025-00	s METAL, CHIP 100 5% 1/10W
R219	1-216-073-00	s METAL, CHIP 10K 5% 1/10W
R220	1-216-025-00	s METAL, CHIP 100 5% 1/10W
R221	1-216-065-00	s METAL, CHIP 4.7K 5% 1/10W
R222	1-216-073-00	s METAL, CHIP 10K 5% 1/10W
R223	1-216-025-00	s METAL, CHIP 100 5% 1/10W
R224	1-216-073-00	s METAL, CHIP 10K 5% 1/10W
R225	1-216-065-00	s METAL, CHIP 4.7K 5% 1/10W
R226	1-216-025-00	s METAL, CHIP 100 5% 1/10W
R227	1-216-073-00	s METAL, CHIP 10K 5% 1/10W
R228	1-216-025-00	s METAL, CHIP 100 5% 1/10W
R229	1-216-073-00	s METAL, CHIP 10K 5% 1/10W
R230	1-216-025-00	s METAL, CHIP 100 5% 1/10W
R231	1-216-065-00	s METAL, CHIP 4.7K 5% 1/10W
R232	1-216-049-00	s METAL, CHIP 1K 5% 1/10W
R233	1-216-638-11	s METAL, CHIP 300 0.5% 1/10W
R234	1-216-025-00	s METAL, CHIP 100 5% 1/10W
R235	1-216-057-00	s METAL, CHIP 2.2K 5% 1/10W
R236	1-216-057-00	s METAL, CHIP 2.2K 5% 1/10W
R237	1-216-057-00	s METAL, CHIP 2.2K 5% 1/10W
R238	1-216-057-00	s METAL, CHIP 2.2K 5% 1/10W
R251	1-216-667-11	s METAL, CHIP 4.7K 0.5% 1/10W
R252	1-216-025-00	s METAL, CHIP 100 5% 1/10W
R253	1-216-049-00	s METAL, CHIP 1K 5% 1/10W
R254	1-216-073-00	s METAL, CHIP 10K 5% 1/10W
R255	1-216-651-11	s METAL, CHIP 1K 0.5% 1/10W
R256	1-216-651-11	s METAL, CHIP 1K 0.5% 1/10W
R257	1-216-045-00	s METAL, CHIP 680 5% 1/10W
R258	1-216-644-11	s METAL, CHIP 510 0.5% 1/10W
R259	1-216-037-00	s METAL, CHIP 330 5% 1/10W
R260	1-216-065-00	s METAL, CHIP 4.7K 5% 1/10W
R261	1-216-644-11	s METAL, CHIP 510 0.5% 1/10W
R262	1-216-037-00	s METAL, CHIP 330 5% 1/10W
R263	1-216-065-00	s METAL, CHIP 4.7K 5% 1/10W
R264	1-216-049-00	s METAL, CHIP 1K 5% 1/10W
R265	1-216-295-00	s METAL, CHIP 0-OHM
R266	1-216-041-00	s METAL, CHIP 470 5% 1/10W
R267	1-216-041-00	s METAL, CHIP 470 5% 1/10W

(MDM-5P BOARD)

Ref. No. or Q'ty	Part No.	SP	Description
R268	1-216-073-00	s	METAL, CHIP 10K 5% 1/10W
R269	1-216-083-00	s	METAL, CHIP 27K 5% 1/10W
R270	1-216-077-00	s	METAL, CHIP 15K 5% 1/10W
R271	1-216-069-00	s	METAL, CHIP 6.8K 5% 1/10W
R272	1-216-097-00	s	METAL, CHIP 100K 5% 1/10W
R273	1-216-065-00	s	METAL, CHIP 4.7K 5% 1/10W
R274	1-216-065-00	s	METAL, CHIP 4.7K 5% 1/10W
R275	1-216-065-00	s	METAL, CHIP 4.7K 5% 1/10W
R276	1-216-073-00	s	METAL, CHIP 10K 5% 1/10W
R277	1-216-073-00	s	METAL, CHIP 10K 5% 1/10W
R278	1-216-049-00	s	METAL, CHIP 1K 5% 1/10W
R279	1-216-073-00	s	METAL, CHIP 10K 5% 1/10W
R280	1-216-049-00	s	METAL, CHIP 1K 5% 1/10W
R281	1-216-081-00	s	METAL, CHIP 22K 5% 1/10W
R282	1-216-675-11	s	METAL, CHIP 10K 0.5% 1/10W
R301	1-216-113-00	s	METAL, CHIP 470K 5% 1/10W
R302	1-216-073-00	s	METAL, CHIP 10K 5% 1/10W
R303	1-216-073-00	s	METAL, CHIP 10K 5% 1/10W
R304	1-216-651-11	s	METAL, CHIP 1K 0.5% 1/10W
R305	1-216-069-00	s	METAL, CHIP 6.8K 5% 1/10W
R306	1-216-069-00	s	METAL, CHIP 6.8K 5% 1/10W
R307	1-216-653-11	s	METAL, CHIP 1.2K 0.5% 1/10W
R308	1-216-073-00	s	METAL, CHIP 10K 5% 1/10W
R309	1-216-073-00	s	METAL, CHIP 10K 5% 1/10W
R310	1-216-049-00	s	METAL, CHIP 1K 5% 1/10W
R311	1-216-063-00	s	METAL, CHIP 3.9K 5% 1/10W
R312	1-216-049-00	s	METAL, CHIP 1K 5% 1/10W
R313	1-216-073-00	s	METAL, CHIP 10K 5% 1/10W
R314	1-216-073-00	s	METAL, CHIP 10K 5% 1/10W
R315	1-216-049-00	s	METAL, CHIP 1K 5% 1/10W
R316	1-216-063-00	s	METAL, CHIP 3.9K 5% 1/10W
R317	1-216-049-00	s	METAL, CHIP 1K 5% 1/10W
R318	1-216-073-00	s	METAL, CHIP 10K 5% 1/10W
R319	1-216-073-00	s	METAL, CHIP 10K 5% 1/10W
R320	1-216-049-00	s	METAL, CHIP 1K 5% 1/10W
R321	1-216-063-00	s	METAL, CHIP 3.9K 5% 1/10W
R322	1-216-049-00	s	METAL, CHIP 1K 5% 1/10W
R323	1-216-676-11	s	METAL, CHIP 11K 0.5% 1/10W
R324	1-216-073-00	s	METAL, CHIP 10K 5% 1/10W
R325	1-216-049-00	s	METAL, CHIP 1K 5% 1/10W
R326	1-216-063-00	s	METAL, CHIP 3.9K 5% 1/10W
R327	1-216-049-00	s	METAL, CHIP 1K 5% 1/10W
R328	1-216-676-11	s	METAL, CHIP 11K 0.5% 1/10W
R329	1-216-073-00	s	METAL, CHIP 10K 5% 1/10W
R330	1-216-049-00	s	METAL, CHIP 1K 5% 1/10W
R331	1-216-063-00	s	METAL, CHIP 3.9K 5% 1/10W
R332	1-216-049-00	s	METAL, CHIP 1K 5% 1/10W
R333	1-216-049-00	s	METAL, CHIP 1K 5% 1/10W
R334	1-216-033-00	s	METAL, CHIP 220 5% 1/10W
R335	1-216-057-00	s	METAL, CHIP 2.2K 5% 1/10W
R336	1-216-057-00	s	METAL, CHIP 2.2K 5% 1/10W
R337	1-216-121-00	s	METAL, CHIP 1M 5% 1/10W
R338	1-216-073-00	s	METAL, CHIP 10K 5% 1/10W
R339	1-216-121-00	s	METAL, CHIP 1M 5% 1/10W
R340	1-216-073-00	s	METAL, CHIP 10K 5% 1/10W
R341	1-216-121-00	s	METAL, CHIP 1M 5% 1/10W
R342	1-216-073-00	s	METAL, CHIP 10K 5% 1/10W
R343	1-216-121-00	s	METAL, CHIP 1M 5% 1/10W
R344	1-216-073-00	s	METAL, CHIP 10K 5% 1/10W

(MDM-5P BOARD)

Ref. No. or Q'ty	Part No.	SP	Description
R345	1-216-057-00	s	METAL, CHIP 2.2K 5% 1/10W
R346	1-216-057-00	s	METAL, CHIP 2.2K 5% 1/10W
R347	1-216-033-00	s	METAL, CHIP 220 5% 1/10W
R348	1-216-638-11	s	METAL, CHIP 300 0.5% 1/10W
R390	1-216-009-00	s	METAL, CHIP 22 5% 1/10W
R391	1-216-684-11	s	METAL, CHIP 24K 0.5% 1/10W
R392	1-216-682-11	s	METAL, CHIP 20K 0.5% 1/10W
R400	1-216-073-00	s	METAL, CHIP 10K 5% 1/10W
R401	1-216-675-11	s	METAL, CHIP 10K 0.5% 1/10W
R402	1-216-073-00	s	METAL, CHIP 10K 5% 1/10W
R404	1-216-682-11	s	METAL, CHIP 20K 0.5% 1/10W
R405	1-216-666-11	s	METAL, CHIP 4.3K 0.5% 1/10W
R406	1-216-675-11	s	METAL, CHIP 10K 0.5% 1/10W
R407	1-216-675-11	s	METAL, CHIP 10K 0.5% 1/10W
R408	1-216-675-11	s	METAL, CHIP 10K 0.5% 1/10W
R410	1-216-073-00	s	METAL, CHIP 10K 5% 1/10W
R411	1-216-650-11	s	METAL, CHIP 910 0.5% 1/10W
R412	1-216-640-11	s	METAL, CHIP 360 0.5% 1/10W
R413	1-216-675-11	s	METAL, CHIP 10K 0.5% 1/10W
R414	1-216-049-00	s	METAL, CHIP 1K 5% 1/10W
R415	1-216-691-11	s	METAL, CHIP 47K 0.5% 1/10W
R416	1-216-685-11	s	METAL, CHIP 27K 0.5% 1/10W
R417	1-216-113-00	s	METAL, CHIP 470K 5% 1/10W
R418	1-216-089-00	s	METAL, CHIP 47K 5% 1/10W
R419	1-216-049-00	s	METAL, CHIP 1K 5% 1/10W
R420	1-216-670-11	s	METAL, CHIP 6.2K 0.5% 1/10W
R421	1-216-686-11	s	METAL, CHIP 30K 0.5% 1/10W
R422	1-216-670-11	s	METAL, CHIP 6.2K 0.5% 1/10W
R423	1-216-665-11	s	METAL, CHIP 3.9K 0.5% 1/10W
R424	1-216-653-11	s	METAL, CHIP 1.2K 0.5% 1/10W
R425	1-216-667-11	s	METAL, CHIP 4.7K 0.5% 1/10W
R426	1-216-073-00	s	METAL, CHIP 10K 5% 1/10W
R427	1-216-041-00	s	METAL, CHIP 470 5% 1/10W
R428	1-216-639-11	s	METAL, CHIP 330 0.5% 1/10W
R429	1-216-661-11	s	METAL, CHIP 2.7K 0.5% 1/10W
R430	1-216-049-00	s	METAL, CHIP 1K 5% 1/10W
R431	1-216-639-11	s	METAL, CHIP 330 0.5% 1/10W
R432	1-216-661-11	s	METAL, CHIP 2.7K 0.5% 1/10W
R433	1-216-049-00	s	METAL, CHIP 1K 5% 1/10W
R434	1-216-049-00	s	METAL, CHIP 1K 5% 1/10W
R435	1-216-065-00	s	METAL, CHIP 4.7K 5% 1/10W
R436	1-216-073-00	s	METAL, CHIP 10K 5% 1/10W
R437	1-216-049-00	s	METAL, CHIP 1K 5% 1/10W
R438	1-216-079-00	s	METAL, CHIP 16K 5% 1/10W
R439	1-216-666-11	s	METAL, CHIP 4.3K 0.5% 1/10W
R440	1-216-065-00	s	METAL, CHIP 4.7K 5% 1/10W
R441	1-216-073-00	s	METAL, CHIP 10K 5% 1/10W
R442	1-216-073-00	s	METAL, CHIP 10K 5% 1/10W
R443	1-216-632-11	s	METAL, CHIP 160 0.5% 1/10W
R444	1-216-073-00	s	METAL, CHIP 10K 5% 1/10W
R445	1-216-638-11	s	METAL, CHIP 300 0.5% 1/10W
R446	1-216-049-00	s	METAL, CHIP 1K 5% 1/10W
R447	1-216-643-11	s	METAL, CHIP 470 0.5% 1/10W
R448	1-216-049-00	s	METAL, CHIP 1K 5% 1/10W
R449	1-216-638-11	s	METAL, CHIP 300 0.5% 1/10W
R450	1-216-057-00	s	METAL, CHIP 2.2K 5% 1/10W
R451	1-216-643-11	s	METAL, CHIP 470 0.5% 1/10W
R452	1-216-057-00	s	METAL, CHIP 2.2K 5% 1/10W
R453	1-216-049-00	s	METAL, CHIP 1K 5% 1/10W

(MDM-5P BOARD)

Ref. No. or Q'ty	Part No.	SP	Description
R454	1-216-049-00	s	METAL, CHIP 1K 5% 1/10W
R455	1-216-073-00	s	METAL, CHIP 10K 5% 1/10W
R456	1-216-073-00	s	METAL, CHIP 10K 5% 1/10W
R457	1-216-025-00	s	METAL, CHIP 100 5% 1/10W
R459	1-216-025-00	s	METAL, CHIP 100 5% 1/10W
R460	1-216-025-00	s	METAL, CHIP 100 5% 1/10W
R461	1-216-049-00	s	METAL, CHIP 1K 5% 1/10W
R463	1-216-611-11	s	METAL, CHIP 22 0.5% 1/10W
R467	1-216-651-11	s	METAL, CHIP 1K 0.5% 1/10W
R468	1-216-651-11	s	METAL, CHIP 1K 0.5% 1/10W
R469	1-216-049-00	s	METAL, CHIP 1K 5% 1/10W
R470	1-216-049-00	s	METAL, CHIP 1K 5% 1/10W
R471	1-216-025-00	s	METAL, CHIP 100 5% 1/10W
R472	1-216-025-00	s	METAL, CHIP 100 5% 1/10W
R473	1-216-049-00	s	METAL, CHIP 1K 5% 1/10W
R474	1-216-643-11	s	METAL, CHIP 470 0.5% 1/10W
R475	1-216-643-11	s	METAL, CHIP 470 0.5% 1/10W
R476	1-216-649-11	s	METAL, CHIP 820 0.5% 1/10W
R477	1-216-049-00	s	METAL, CHIP 1K 5% 1/10W
R478	1-216-049-00	s	METAL, CHIP 1K 5% 1/10W
R479	1-216-049-00	s	METAL, CHIP 1K 5% 1/10W
R480	1-216-049-00	s	METAL, CHIP 1K 5% 1/10W
R481	1-216-643-11	s	METAL, CHIP 470 0.5% 1/10W
R482	1-216-667-11	s	METAL, CHIP 4.7K 0.5% 1/10W
R483	1-216-643-11	s	METAL, CHIP 470 0.5% 1/10W
R484	1-216-646-11	s	METAL, CHIP 620 0.5% 1/10W
R485	1-216-049-00	s	METAL, CHIP 1K 5% 1/10W
R486	1-216-620-11	s	METAL, CHIP 51 0.5% 1/10W
R488	1-216-089-00	s	METAL, CHIP 47K 5% 1/10W
R489	1-216-025-00	s	METAL, CHIP 100 5% 1/10W
R490	1-216-009-00	s	METAL, CHIP 22 5% 1/10W
R491	1-216-041-00	s	METAL, CHIP 470 5% 1/10W
R492	1-216-009-00	s	METAL, CHIP 22 5% 1/10W
R493	1-216-656-11	s	METAL, CHIP 1.6K 0.5% 1/10W
R494	1-216-656-11	s	METAL, CHIP 1.6K 0.5% 1/10W
R495	1-216-009-00	s	METAL, CHIP 22 5% 1/10W
R496	1-216-699-11	s	METAL, CHIP 100K 0.5% 1/10W
R497	1-216-677-11	s	METAL, CHIP 12K 0.5% 1/10W
R498	1-216-073-00	s	METAL, CHIP 10K 5% 1/10W
R499	1-216-073-00	s	METAL, CHIP 10K 5% 1/10W
R501	1-216-634-11	s	METAL, CHIP 200 0.5% 1/10W
R502	1-216-627-11	s	METAL, CHIP 100 0.5% 1/10W
R503	1-216-073-00	s	METAL, CHIP 10K 5% 1/10W
R505	1-216-073-00	s	METAL, CHIP 10K 5% 1/10W
R507	1-216-049-00	s	METAL, CHIP 1K 5% 1/10W
R508	1-216-651-11	s	METAL, CHIP 1K 0.5% 1/10W
R509	1-216-651-11	s	METAL, CHIP 1K 0.5% 1/10W
R510	1-216-025-00	s	METAL, CHIP 100 5% 1/10W
R511	1-216-059-00	s	METAL, CHIP 2.7K 5% 1/10W
R512	1-216-635-11	s	METAL, CHIP 220 0.5% 1/10W
R513	1-216-063-00	s	METAL, CHIP 3.9K 5% 1/10W
R514	1-216-037-00	s	METAL, CHIP 330 5% 1/10W
R515	1-216-037-00	s	METAL, CHIP 330 5% 1/10W
R516	1-216-065-00	s	METAL, CHIP 4.7K 5% 1/10W
R517	1-216-065-00	s	METAL, CHIP 4.7K 5% 1/10W
R518	1-216-057-00	s	METAL, CHIP 2.2K 5% 1/10W
R519	1-216-624-11	s	METAL, CHIP 75 0.5% 1/10W
R520	1-216-025-00	s	METAL, CHIP 100 5% 1/10W
R521	1-216-025-00	s	METAL, CHIP 100 5% 1/10W

(MDM-5P BOARD)

Ref. No. or Q'ty	Part No.	SP	Description
R522	1-216-061-00	s	METAL, CHIP 3.3K 5% 1/10W
R528	1-216-065-00	s	METAL, CHIP 4.7K 5% 1/10W
R528	1-216-025-00	s	METAL, CHIP 100 5% 1/10W
R529	1-216-025-00	s	METAL, CHIP 100 5% 1/10W
R530	1-216-061-00	s	METAL, CHIP 3.3K 5% 1/10W
R531	1-216-065-00	s	METAL, CHIP 4.7K 5% 1/10W
R532	1-216-073-00	s	METAL, CHIP 10K 5% 1/10W
R533	1-216-025-00	s	METAL, CHIP 100 5% 1/10W
R534	1-216-025-00	s	METAL, CHIP 100 5% 1/10W
R535	1-216-025-00	s	METAL, CHIP 100 5% 1/10W
R536	1-216-057-00	s	METAL, CHIP 2.2K 5% 1/10W
R537	1-216-635-11	s	METAL, CHIP 220 0.5% 1/10W
R538	1-216-025-00	s	METAL, CHIP 100 5% 1/10W
R539	1-216-635-11	s	METAL, CHIP 220 0.5% 1/10W
R540	1-216-025-00	s	METAL, CHIP 100 5% 1/10W
R541	1-216-065-00	s	METAL, CHIP 4.7K 5% 1/10W
R542	1-216-049-00	s	METAL, CHIP 1K 5% 1/10W
R543	1-216-635-11	s	METAL, CHIP 220 0.5% 1/10W
R544	1-216-037-00	s	METAL, CHIP 330 5% 1/10W
R545	1-216-037-00	s	METAL, CHIP 330 5% 1/10W
R546	1-216-065-00	s	METAL, CHIP 4.7K 5% 1/10W
R547	1-216-065-00	s	METAL, CHIP 4.7K 5% 1/10W
R548	1-216-049-00	s	METAL, CHIP 1K 5% 1/10W
R549	1-216-049-00	s	METAL, CHIP 1K 5% 1/10W
R550	1-216-009-00	s	METAL, CHIP 22 5% 1/10W
R551	1-216-009-00	s	METAL, CHIP 22 5% 1/10W
R552	1-216-057-00	s	METAL, CHIP 2.2K 5% 1/10W
R553	1-216-057-00	s	METAL, CHIP 2.2K 5% 1/10W
R554	1-216-009-00	s	METAL, CHIP 22 5% 1/10W
R555	1-216-009-00	s	METAL, CHIP 22 5% 1/10W
R557	1-216-073-00	s	METAL, CHIP 10K 5% 1/10W
R558	1-216-049-00	s	METAL, CHIP 1K 5% 1/10W
R651	1-216-644-11	s	METAL, CHIP 510 0.5% 1/10W
R652	1-216-045-00	s	METAL, CHIP 680 5% 1/10W
R653	1-216-037-00	s	METAL, CHIP 330 5% 1/10W
R654	1-216-065-00	s	METAL, CHIP 4.7K 5% 1/10W
R655	1-216-644-11	s	METAL, CHIP 510 0.5% 1/10W
R656	1-216-037-00	s	METAL, CHIP 330 5% 1/10W
R657	1-216-065-00	s	METAL, CHIP 4.7K 5% 1/10W
R658	1-216-295-00	s	METAL, CHIP 0-OHM
R659	1-216-049-00	s	METAL, CHIP 1K 5% 1/10W
R660	1-216-295-00	s	METAL, CHIP 0-OHM
R661	1-216-049-00	s	METAL, CHIP 1K 5% 1/10W
R662	1-216-053-00	s	METAL, CHIP 27K 5% 1/10W
R663	1-216-077-00	s	METAL, CHIP 15K 5% 1/10W
R664	1-216-069-00	s	METAL, CHIP 8.8K 5% 1/10W
R665	1-216-097-00	s	METAL, CHIP 100K 5% 1/10W
R666	1-216-065-00	s	METAL, CHIP 4.7K 5% 1/10W
R667	1-216-065-00	s	METAL, CHIP 4.7K 5% 1/10W
R668	1-216-065-00	s	METAL, CHIP 4.7K 5% 1/10W
R669	1-216-073-00	s	METAL, CHIP 10K 5% 1/10W
R670	1-216-049-00	s	METAL, CHIP 1K 5% 1/10W
R671	1-216-073-00	s	METAL, CHIP 10K 5% 1/10W
R672	1-216-049-00	s	METAL, CHIP 1K 5% 1/10W
R701	1-216-113-00	s	METAL, CHIP 470K 5% 1/10W
R704	1-216-073-00	s	METAL, CHIP 10K 5% 1/10W
R705	1-216-073-00	s	METAL, CHIP 10K 5% 1/10W
R706	1-216-651-11	s	METAL, CHIP 1K 0.5% 1/10W
R707	1-216-069-00	s	METAL, CHIP 6.8K 5% 1/10W

(MDM-5P BOARD)

Ref. No. or Q'ty	Part No.	SP	Description
R708	1-216-089-00	s	METAL, CHIP 6.8K 5% 1/10W
R709	1-216-653-11	s	METAL, CHIP 1.2K 0.5% 1/10W
R710	1-216-073-00	s	METAL, CHIP 10K 5% 1/10W
R711	1-216-073-00	s	METAL, CHIP 10K 5% 1/10W
R712	1-216-049-00	s	METAL, CHIP 1K 5% 1/10W
R713	1-216-063-00	s	METAL, CHIP 3.9K 5% 1/10W
R714	1-216-049-00	s	METAL, CHIP 1K 5% 1/10W
R715	1-216-073-00	s	METAL, CHIP 10K 5% 1/10W
R716	1-216-073-00	s	METAL, CHIP 10K 5% 1/10W
R717	1-216-049-00	s	METAL, CHIP 1K 5% 1/10W
R718	1-216-063-00	s	METAL, CHIP 3.9K 5% 1/10W
R719	1-216-049-00	s	METAL, CHIP 1K 5% 1/10W
R720	1-216-676-11	s	METAL, CHIP 11K 0.5% 1/10W
R721	1-216-073-00	s	METAL, CHIP 10K 5% 1/10W
R722	1-216-049-00	s	METAL, CHIP 1K 5% 1/10W
R723	1-216-063-00	s	METAL, CHIP 3.9K 5% 1/10W
R724	1-216-049-00	s	METAL, CHIP 1K 5% 1/10W
R725	1-216-676-11	s	METAL, CHIP 11K 0.5% 1/10W
R726	1-216-073-00	s	METAL, CHIP 10K 5% 1/10W
R727	1-216-049-00	s	METAL, CHIP 1K 5% 1/10W
R728	1-216-063-00	s	METAL, CHIP 3.9K 5% 1/10W
R729	1-216-049-00	s	METAL, CHIP 1K 5% 1/10W
R730	1-216-049-00	s	METAL, CHIP 1K 5% 1/10W
R731	1-216-033-00	s	METAL, CHIP 220 5% 1/10W
R732	1-216-057-00	s	METAL, CHIP 2.2K 5% 1/10W
R733	1-216-057-00	s	METAL, CHIP 2.2K 5% 1/10W
R734	1-216-121-00	s	METAL, CHIP 1M 5% 1/10W
R735	1-216-073-00	s	METAL, CHIP 10K 5% 1/10W
R736	1-216-121-00	s	METAL, CHIP 1M 5% 1/10W
R737	1-216-073-00	s	METAL, CHIP 10K 5% 1/10W
R738	1-216-121-00	s	METAL, CHIP 1M 5% 1/10W
R739	1-216-073-00	s	METAL, CHIP 10K 5% 1/10W
R740	1-216-121-00	s	METAL, CHIP 1M 5% 1/10W
R741	1-216-073-00	s	METAL, CHIP 10K 5% 1/10W
R742	1-216-057-00	s	METAL, CHIP 2.2K 5% 1/10W
R743	1-216-057-00	s	METAL, CHIP 2.2K 5% 1/10W
R744	1-216-033-00	s	METAL, CHIP 220 5% 1/10W
R748	1-216-638-11	s	METAL, CHIP 300 0.5% 1/10W
R790	1-216-643-11	s	METAL, CHIP 470 0.5% 1/10W
R791	1-216-646-11	s	METAL, CHIP 620 0.5% 1/10W
R792	1-216-049-00	s	METAL, CHIP 1K 5% 1/10W
R793	1-216-073-00	s	METAL, CHIP 10K 5% 1/10W
R794	1-216-073-00	s	METAL, CHIP 10K 5% 1/10W
R795	1-216-009-00	s	METAL, CHIP 22 5% 1/10W
R801	1-216-691-11	s	METAL, CHIP 47K 0.5% 1/10W
R802	1-216-685-11	s	METAL, CHIP 27K 0.5% 1/10W
R803	1-216-689-00	s	METAL, CHIP 47K 5% 1/10W
R804	1-216-049-00	s	METAL, CHIP 1K 5% 1/10W
R805	1-216-113-00	s	METAL, CHIP 470K 5% 1/10W
R806	1-216-670-11	s	METAL, CHIP 6.2K 0.5% 1/10W
R807	1-216-686-11	s	METAL, CHIP 30K 0.5% 1/10W
R808	1-216-670-11	s	METAL, CHIP 6.2K 0.5% 1/10W
R809	1-216-665-11	s	METAL, CHIP 3.9K 0.5% 1/10W
R810	1-216-651-11	s	METAL, CHIP 1K 0.5% 1/10W
R811	1-216-073-00	s	METAL, CHIP 10K 5% 1/10W
R812	1-216-041-00	s	METAL, CHIP 470 5% 1/10W
R813	1-216-639-11	s	METAL, CHIP 330 0.5% 1/10W
R814	1-216-661-11	s	METAL, CHIP 2.7K 0.5% 1/10W
R815	1-216-049-00	s	METAL, CHIP 1K 5% 1/10W

(MDM-5P BOARD)

Ref. No. or Q'ty	Part No.	SP	Description
R816	1-216-639-11	s	METAL, CHIP 330 0.5% 1/10W
R817	1-216-661-11	s	METAL, CHIP 2.7K 0.5% 1/10W
R818	1-216-049-00	s	METAL, CHIP 1K 5% 1/10W
R819	1-216-073-00	s	METAL, CHIP 10K 5% 1/10W
R820	1-216-049-00	s	METAL, CHIP 1K 5% 1/10W
R822	1-216-049-00	s	METAL, CHIP 1K 5% 1/10W
R823	1-216-657-11	s	METAL, CHIP 1.8K 0.5% 1/10W
R824	1-216-657-11	s	METAL, CHIP 1.8K 0.5% 1/10W
R825	1-216-631-11	s	METAL, CHIP 150 0.5% 1/10W
R826	1-216-643-11	s	METAL, CHIP 470 0.5% 1/10W
R827	1-216-631-11	s	METAL, CHIP 150 0.5% 1/10W
R828	1-216-663-11	s	METAL, CHIP 3.3K 0.5% 1/10W
R829	1-216-073-00	s	METAL, CHIP 10K 5% 1/10W
R830	1-216-073-00	s	METAL, CHIP 10K 5% 1/10W
R831	1-216-049-00	s	METAL, CHIP 1K 5% 1/10W
R832	1-216-065-00	s	METAL, CHIP 4.7K 5% 1/10W
R833	1-216-073-00	s	METAL, CHIP 10K 5% 1/10W
R834	1-216-049-00	s	METAL, CHIP 1K 5% 1/10W
R835	1-216-065-00	s	METAL, CHIP 4.7K 5% 1/10W
R836	1-216-073-00	s	METAL, CHIP 10K 5% 1/10W
R837	1-216-073-00	s	METAL, CHIP 10K 5% 1/10W
R838	1-216-073-00	s	METAL, CHIP 10K 5% 1/10W
R839	1-216-620-11	s	METAL, CHIP 51 0.5% 1/10W
R840	1-216-079-00	s	METAL, CHIP 18K 5% 1/10W
R841	1-216-686-11	s	METAL, CHIP 4.3K 0.5% 1/10W
R842	1-216-643-11	s	METAL, CHIP 470 0.5% 1/10W
R843	1-216-049-00	s	METAL, CHIP 1K 5% 1/10W
R844	1-216-049-00	s	METAL, CHIP 1K 5% 1/10W
R845	1-216-639-11	s	METAL, CHIP 330 0.5% 1/10W
R846	1-216-643-11	s	METAL, CHIP 470 0.5% 1/10W
R847	1-216-057-00	s	METAL, CHIP 2.2K 5% 1/10W
R848	1-216-639-11	s	METAL, CHIP 330 0.5% 1/10W
R849	1-216-057-00	s	METAL, CHIP 2.2K 5% 1/10W
R850	1-216-049-00	s	METAL, CHIP 1K 5% 1/10W
R851	1-216-049-00	s	METAL, CHIP 1K 5% 1/10W
R855	1-216-025-00	s	METAL, CHIP 100 5% 1/10W
R857	1-216-025-00	s	METAL, CHIP 100 5% 1/10W
R858	1-216-025-00	s	METAL, CHIP 100 5% 1/10W
R859	1-216-049-00	s	METAL, CHIP 1K 5% 1/10W
R860	1-216-811-11	s	METAL, CHIP 22 0.5% 1/10W
R861	1-216-049-00	s	METAL, CHIP 1K 5% 1/10W
R863	1-216-073-00	s	METAL, CHIP 10K 5% 1/10W
R864	1-216-073-00	s	METAL, CHIP 10K 5% 1/10W
R865	1-216-620-11	s	METAL, CHIP 51 0.5% 1/10W
R867	1-216-089-00	s	METAL, CHIP 47K 5% 1/10W
R868	1-216-025-00	s	METAL, CHIP 100 5% 1/10W
R869	1-216-656-11	s	METAL, CHIP 1.6K 0.5% 1/10W
R870	1-216-009-00	s	METAL, CHIP 22 5% 1/10W
R871	1-216-656-11	s	METAL, CHIP 1.6K 0.5% 1/10W
R873	1-216-691-11	s	METAL, CHIP 47K 0.5% 1/10W
R875	1-216-651-11	s	METAL, CHIP 1K 0.5% 1/10W
R876	1-216-651-11	s	METAL, CHIP 1K 0.5% 1/10W
R877	1-216-049-00	s	METAL, CHIP 1K 5% 1/10W
R878	1-216-049-00	s	METAL, CHIP 1K 5% 1/10W
R879	1-216-643-11	s	METAL, CHIP 470 0.5% 1/10W
R880	1-216-643-11	s	METAL, CHIP 470 0.5% 1/10W
R881	1-216-649-11	s	METAL, CHIP 820 0.5% 1/10W
R882	1-216-025-00	s	METAL, CHIP 100 5% 1/10W
R883	1-216-025-00	s	METAL, CHIP 100 5% 1/10W

(MDM-5P BOARD)

Ref. No. or Q'ty	Part No.	SP Description
R884	1-216-049-00	s METAL, CHIP 1K 5% 1/10W
R885	1-216-049-00	s METAL, CHIP 1K 5% 1/10W
R886	1-216-049-00	s METAL, CHIP 1K 5% 1/10W
R887	1-216-049-00	s METAL, CHIP 1K 5% 1/10W
R888	1-216-667-11	s METAL, CHIP 4.7K 0.5% 1/10W
R889	1-216-643-11	s METAL, CHIP 470 0.5% 1/10W
R890	1-216-009-00	s METAL, CHIP 22 5% 1/10W
R891	1-216-009-00	s METAL, CHIP 22 5% 1/10W
R892	1-216-009-00	s METAL, CHIP 22 5% 1/10W
R893	1-216-643-11	s METAL, CHIP 470 0.5% 1/10W
R894	1-216-073-00	s METAL, CHIP 10K 5% 1/10W
R901	1-216-097-00	s METAL, CHIP 100K 5% 1/10W
R902	1-216-097-00	s METAL, CHIP 100K 5% 1/10W
R903	1-216-097-00	s METAL, CHIP 100K 5% 1/10W
R904	1-216-097-00	s METAL, CHIP 100K 5% 1/10W
R905	1-216-097-00	s METAL, CHIP 100K 5% 1/10W
R906	1-216-097-00	s METAL, CHIP 100K 5% 1/10W
R907	1-216-097-00	s METAL, CHIP 100K 5% 1/10W
R908	1-216-097-00	s METAL, CHIP 100K 5% 1/10W
R909	1-216-073-00	s METAL, CHIP 10K 5% 1/10W
R910	1-216-073-00	s METAL, CHIP 10K 5% 1/10W
R911	1-216-025-00	s METAL, CHIP 100 5% 1/10W
R912	1-216-025-00	s METAL, CHIP 100 5% 1/10W
R913	1-216-073-00	s METAL, CHIP 10K 5% 1/10W
R914	1-216-073-00	s METAL, CHIP 10K 5% 1/10W
R915	1-216-073-00	s METAL, CHIP 10K 5% 1/10W
R916	1-216-049-00	s METAL, CHIP 1K 5% 1/10W
R917	1-216-049-00	s METAL, CHIP 1K 5% 1/10W
R918	1-216-073-00	s METAL, CHIP 10K 5% 1/10W
R919	1-216-097-00	s METAL, CHIP 100K 5% 1/10W
R920	1-216-073-00	s METAL, CHIP 10K 5% 1/10W
R921	1-216-073-00	s METAL, CHIP 10K 5% 1/10W
R922	1-216-073-00	s METAL, CHIP 10K 5% 1/10W
R923	1-216-049-00	s METAL, CHIP 1K 5% 1/10W
R924	1-216-097-00	s METAL, CHIP 100K 5% 1/10W
R925	1-216-073-00	s METAL, CHIP 10K 5% 1/10W
R926	1-216-073-00	s METAL, CHIP 10K 5% 1/10W
R927	1-216-073-00	s METAL, CHIP 10K 5% 1/10W
R928	1-216-073-00	s METAL, CHIP 10K 5% 1/10W
R929	1-216-073-00	s METAL, CHIP 10K 5% 1/10W
R930	1-216-073-00	s METAL, CHIP 10K 5% 1/10W
R931	1-216-097-00	s METAL, CHIP 100K 5% 1/10W
R933	1-216-121-00	s METAL, CHIP 1M 5% 1/10W
R934	1-216-073-00	s METAL, CHIP 10K 5% 1/10W
R935	1-216-675-11	s METAL, CHIP 10K 0.5% 1/10W
R936	1-216-049-00	s METAL, CHIP 1K 5% 1/10W
R937	1-216-089-00	s METAL, CHIP 47K 5% 1/10W
R938	1-216-051-00	s METAL, CHIP 3.3K 5% 1/10W
R939	1-216-681-11	s METAL, CHIP 18K 0.5% 1/10W
R940	1-216-073-00	s METAL, CHIP 10K 5% 1/10W
R941	1-216-677-11	s METAL, CHIP 12K 0.5% 1/10W
R942	1-216-097-00	s METAL, CHIP 100K 5% 1/10W
R943	1-216-097-00	s METAL, CHIP 100K 5% 1/10W
R944	1-216-097-00	s METAL, CHIP 100K 5% 1/10W
R945	1-216-097-00	s METAL, CHIP 100K 5% 1/10W
R946	1-216-097-00	s METAL, CHIP 100K 5% 1/10W
R947	1-216-097-00	s METAL, CHIP 100K 5% 1/10W
R948	1-216-097-00	s METAL, CHIP 100K 5% 1/10W
R949	1-216-097-00	s METAL, CHIP 100K 5% 1/10W

(MDM-5P BOARD)

Ref. No. or Q'ty	Part No.	SP Description
R950	1-216-097-00	s METAL, CHIP 100K 5% 1/10W
R951	1-216-097-00	s METAL, CHIP 100K 5% 1/10W
R952	1-216-097-00	s METAL, CHIP 100K 5% 1/10W
R953	1-216-097-00	s METAL, CHIP 100K 5% 1/10W
R955	1-216-073-00	s METAL, CHIP 10K 5% 1/10W
R956	1-216-073-00	s METAL, CHIP 10K 5% 1/10W
R957	1-216-097-00	s METAL, CHIP 100K 5% 1/10W
R958	1-216-049-00	s METAL, CHIP 1K 5% 1/10W
R959	1-216-073-00	s METAL, CHIP 10K 5% 1/10W
R960	1-216-073-00	s METAL, CHIP 10K 5% 1/10W
R961	1-216-097-00	s METAL, CHIP 100K 5% 1/10W
R962	1-216-097-00	s METAL, CHIP 100K 5% 1/10W
R963	1-216-097-00	s METAL, CHIP 100K 5% 1/10W
R964	1-216-097-00	s METAL, CHIP 100K 5% 1/10W
R965	1-216-097-00	s METAL, CHIP 100K 5% 1/10W
R966	1-216-097-00	s METAL, CHIP 100K 5% 1/10W
R967	1-216-097-00	s METAL, CHIP 100K 5% 1/10W
R968	1-216-097-00	s METAL, CHIP 100K 5% 1/10W
R969	1-216-097-00	s METAL, CHIP 100K 5% 1/10W
R970	1-216-041-00	s METAL, CHIP 470 5% 1/10W
R971	1-216-073-00	s METAL, CHIP 10K 5% 1/10W
R972	1-216-073-00	s METAL, CHIP 10K 5% 1/10W
R973	1-216-073-00	s METAL, CHIP 10K 5% 1/10W
R974	1-216-073-00	s METAL, CHIP 10K 5% 1/10W
R975	1-216-041-00	s METAL, CHIP 470 5% 1/10W
R976	1-216-041-00	s METAL, CHIP 470 5% 1/10W
R977	1-216-073-00	s METAL, CHIP 10K 5% 1/10W
R978	1-216-097-00	s METAL, CHIP 100K 5% 1/10W
R980	1-216-295-00	s METAL, CHIP 0-OHM
R981	1-216-675-11	s METAL, CHIP 10K 0.5% 1/10W
R982	1-216-295-00	s METAL, CHIP 0-OHM
R983	1-216-675-11	s METAL, CHIP 10K 0.5% 1/10W
R1101	1-216-079-00	s METAL, CHIP 18K 5% 1/10W
R1102	1-216-075-00	s METAL, CHIP 12K 5% 1/10W
R1103	1-216-748-11	s METAL, CHIP 39K 1% 1/10W
R1104	1-216-085-00	s METAL, CHIP 33K 5% 1/10W
R1105	1-216-085-00	s METAL, CHIP 33K 5% 1/10W
R1106	1-216-684-11	s METAL, CHIP 24K 0.5% 1/10W
R1107	1-216-081-00	s METAL, CHIP 22K 5% 1/10W
R1108	1-216-075-00	s METAL, CHIP 12K 5% 1/10W
R1109	1-216-081-00	s METAL, CHIP 22K 5% 1/10W
R1110	1-216-073-00	s METAL, CHIP 10K 5% 1/10W
R1111	1-216-073-00	s METAL, CHIP 10K 5% 1/10W
R1112	1-216-073-00	s METAL, CHIP 10K 5% 1/10W
R1113	1-216-025-00	s METAL, CHIP 100 5% 1/10W
R1114	1-216-057-00	s METAL, CHIP 2.2K 5% 1/10W
R1115	1-216-674-11	s METAL, CHIP 9.1K 0.5% 1/10W
R1116	1-216-651-11	s METAL, CHIP 1K 0.5% 1/10W
R1117	1-216-638-11	s METAL, CHIP 300 0.5% 1/10W
R1118	1-216-651-11	s METAL, CHIP 1K 0.5% 1/10W
R1119	1-216-654-11	s METAL, CHIP 1.3K 0.5% 1/10W
R1120	1-216-654-11	s METAL, CHIP 1.3K 0.5% 1/10W
R1121	1-216-049-00	s METAL, CHIP 1K 5% 1/10W
R1122	1-216-057-00	s METAL, CHIP 2.2K 5% 1/10W
R1123	1-216-073-00	s METAL, CHIP 10K 5% 1/10W
R1124	1-218-184-11	s METAL, CHIP 997 0.1% 1/16W
R1125	1-216-033-00	s METAL, CHIP 220 5% 1/10W
R1126	1-216-615-11	s METAL, CHIP 33 0.5% 1/10W
R1127	1-218-922-11	s METAL, CHIP 3.26K 0.10% 1/16W

(MDM-5P BOARD)

Ref. No. or Q'ty	Part No.	SP	Description
R1128	1-216-615-11	s	METAL, CHIP 33 0.5% 1/10W
R1129	1-216-661-11	s	METAL, CHIP 2.7K 0.5% 1/10W
R1130	1-216-655-11	s	METAL, CHIP 1.5K 0.5% 1/10W
R1131	1-216-675-11	s	METAL, CHIP 10K 0.5% 1/10W
R1132	1-216-093-00	s	METAL, CHIP 68K 5% 1/10W
R1133	1-216-085-00	s	METAL, CHIP 33K 5% 1/10W
R1134	1-216-671-11	s	METAL, CHIP 6.8K 0.5% 1/10W
R1135	1-216-665-11	s	METAL, CHIP 3.9K 0.5% 1/10W
R1136	1-216-085-00	s	METAL, CHIP 33K 5% 1/10W
R1137	1-216-009-00	s	METAL, CHIP 22 5% 1/10W
R1138	1-216-037-00	s	METAL, CHIP 330 5% 1/10W
R1139	1-216-009-00	s	METAL, CHIP 22 5% 1/10W
R1140	1-216-061-00	s	METAL, CHIP 3.3K 5% 1/10W
R1141	1-216-091-00	s	METAL, CHIP 56K 5% 1/10W
R1142	1-216-081-00	s	METAL, CHIP 22K 5% 1/10W
R1143	1-216-091-00	s	METAL, CHIP 56K 5% 1/10W
R1144	1-216-081-00	s	METAL, CHIP 22K 5% 1/10W
R1145	1-216-073-00	s	METAL, CHIP 10K 5% 1/10W
R1146	1-216-073-00	s	METAL, CHIP 10K 5% 1/10W
R1147	1-216-073-00	s	METAL, CHIP 10K 5% 1/10W
R1148	1-216-081-00	s	METAL, CHIP 22K 5% 1/10W
R1149	1-216-081-00	s	METAL, CHIP 22K 5% 1/10W
R1150	1-216-655-11	s	METAL, CHIP 1.5K 0.5% 1/10W
R1151	1-216-651-11	s	METAL, CHIP 1K 0.5% 1/10W
R1152	1-216-653-00	s	METAL, CHIP 1.5K 5% 1/10W
R1153	1-216-679-11	s	METAL, CHIP 15K 0.5% 1/10W
R1154	1-216-651-11	s	METAL, CHIP 1K 0.5% 1/10W
R1155	1-216-655-11	s	METAL, CHIP 1.5K 0.5% 1/10W
R1156	1-216-662-11	s	METAL, CHIP 3K 0.5% 1/10W
R1157	1-216-662-11	s	METAL, CHIP 3K 0.5% 1/10W
R1160	1-216-635-11	s	METAL, CHIP 220 0.5% 1/10W
R1161	1-216-682-11	s	METAL, CHIP 20K 0.5% 1/10W
R1162	1-216-071-00	s	METAL, CHIP 8.2K 5% 1/10W
R1163	1-216-049-00	s	METAL, CHIP 1K 5% 1/10W
R1168	1-216-638-11	s	METAL, CHIP 300 0.5% 1/10W
R1169	1-216-025-00	s	METAL, CHIP 100 5% 1/10W
R1170	1-216-049-00	s	METAL, CHIP 1K 5% 1/10W
R1171	1-216-057-00	s	METAL, CHIP 2.2K 5% 1/10W
R1172	1-216-049-00	s	METAL, CHIP 1K 5% 1/10W
R1173	1-216-049-00	s	METAL, CHIP 1K 5% 1/10W
R1174	1-216-049-00	s	METAL, CHIP 1K 5% 1/10W
R1175	1-216-627-11	s	METAL, CHIP 100 0.5% 1/10W
R1176	1-216-620-11	s	METAL, CHIP 51 0.5% 1/10W
R1177	1-216-025-00	s	METAL, CHIP 100 5% 1/10W
R1178	1-216-057-00	s	METAL, CHIP 2.2K 5% 1/10W
R1179	1-216-073-00	s	METAL, CHIP 10K 5% 1/10W
R1180	1-216-059-00	s	METAL, CHIP 2.7K 5% 1/10W
R1181	1-216-055-00	s	METAL, CHIP 1.8K 5% 1/10W
R1182	1-216-057-00	s	METAL, CHIP 2.2K 5% 1/10W
R1183	1-216-061-00	s	METAL, CHIP 3.3K 5% 1/10W
R1184	1-216-073-00	s	METAL, CHIP 10K 5% 1/10W
R1185	1-216-073-00	s	METAL, CHIP 10K 5% 1/10W
R1186	1-216-683-11	s	METAL, CHIP 22K 0.5% 1/10W
R1187	1-216-653-00	s	METAL, CHIP 1.5K 5% 1/10W
R1188	1-216-667-11	s	METAL, CHIP 4.7K 0.5% 1/10W
R1189	1-216-085-00	s	METAL, CHIP 4.7K 5% 1/10W
R1190	1-216-085-00	s	METAL, CHIP 33K 5% 1/10W
R1191	1-216-085-00	s	METAL, CHIP 4.7K 5% 1/10W
R1192	1-216-081-00	s	METAL, CHIP 22K 5% 1/10W

(MDM-5P BOARD)

Ref. No. or Q'ty	Part No.	SP	Description
R1193	1-216-073-00	s	METAL, CHIP 10K 5% 1/10W
R1194	1-216-073-00	s	METAL, CHIP 10K 5% 1/10W
R1195	1-216-073-00	s	METAL, CHIP 10K 5% 1/10W
R1196	1-216-073-00	s	METAL, CHIP 10K 5% 1/10W
R1197	1-216-073-00	s	METAL, CHIP 10K 5% 1/10W
R1199	1-216-631-11	s	METAL, CHIP 150 0.5% 1/10W
R1200	1-216-748-11	s	METAL, CHIP 39K 1% 1/10W
R1202	1-216-691-11	s	METAL, CHIP 47K 0.5% 1/10W
R1203	1-216-696-11	s	METAL, CHIP 75K 0.5% 1/10W
R1204	1-216-089-00	s	METAL, CHIP 47K 5% 1/10W
R1205	1-216-089-00	s	METAL, CHIP 47K 5% 1/10W
R1501	1-216-638-11	s	METAL, CHIP 300 0.5% 1/10W
R1502	1-216-025-00	s	METAL, CHIP 100 5% 1/10W
R1503	1-216-057-00	s	METAL, CHIP 2.2K 5% 1/10W
R1504	1-216-073-00	s	METAL, CHIP 10K 5% 1/10W
R1505	1-216-073-00	s	METAL, CHIP 10K 5% 1/10W
R1506	1-216-073-00	s	METAL, CHIP 10K 5% 1/10W
R1507	1-216-073-00	s	METAL, CHIP 10K 5% 1/10W
R1508	1-216-073-00	s	METAL, CHIP 10K 5% 1/10W
R1509	1-216-073-00	s	METAL, CHIP 10K 5% 1/10W
R1510	1-216-057-00	s	METAL, CHIP 2.2K 5% 1/10W
R1511	1-216-674-11	s	METAL, CHIP 9.1K 0.5% 1/10W
R1512	1-216-073-00	s	METAL, CHIP 10K 5% 1/10W
R1513	1-216-651-11	s	METAL, CHIP 1K 0.5% 1/10W
R1514	1-216-651-11	s	METAL, CHIP 1K 0.5% 1/10W
R1515	1-216-295-00	s	METAL, CHIP 0-OHM
R1516	1-216-057-00	s	METAL, CHIP 2.2K 5% 1/10W
R1517	1-216-025-00	s	METAL, CHIP 100 5% 1/10W
R1518	1-216-057-00	s	METAL, CHIP 2.2K 5% 1/10W
R1519	1-216-077-00	s	METAL, CHIP 15K 5% 1/10W
R1520	1-216-083-00	s	METAL, CHIP 27K 5% 1/10W
R1521	1-216-075-00	s	METAL, CHIP 12K 5% 1/10W
R1522	1-216-085-00	s	METAL, CHIP 33K 5% 1/10W
R1523	1-216-081-00	s	METAL, CHIP 22K 5% 1/10W
R1524	1-216-077-00	s	METAL, CHIP 15K 5% 1/10W
R1525	1-216-684-11	s	METAL, CHIP 24K 0.5% 1/10W
R1526	1-216-077-00	s	METAL, CHIP 15K 5% 1/10W
R1527	1-216-748-11	s	METAL, CHIP 39K 1% 1/10W
R1528	1-216-073-00	s	METAL, CHIP 10K 5% 1/10W
R1529	1-218-184-11	s	METAL, CHIP 997 0.1% 1/16W
R1530	1-216-603-11	s	METAL, CHIP 10 0.5% 1/10W
R1531	1-218-922-11	s	METAL, CHIP 3.26K 0.10% 1/16W
R1532	1-216-033-00	s	METAL, CHIP 220 5% 1/10W
R1533	1-216-627-11	s	METAL, CHIP 100 0.5% 1/10W
R1534	1-216-663-11	s	METAL, CHIP 3.3K 0.5% 1/10W
R1535	1-216-061-00	s	METAL, CHIP 3.3K 5% 1/10W
R1536	1-216-655-11	s	METAL, CHIP 1.5K 0.5% 1/10W
R1537	1-216-085-00	s	METAL, CHIP 33K 5% 1/10W
R1538	1-216-673-11	s	METAL, CHIP 8.2K 0.5% 1/10W
R1539	1-216-669-11	s	METAL, CHIP 5.6K 0.5% 1/10W
R1540	1-216-085-00	s	METAL, CHIP 33K 5% 1/10W
R1541	1-216-009-00	s	METAL, CHIP 22 5% 1/10W
R1542	1-216-037-00	s	METAL, CHIP 330 5% 1/10W
R1543	1-216-009-00	s	METAL, CHIP 22 5% 1/10W
R1544	1-216-638-11	s	METAL, CHIP 300 0.5% 1/10W
R1545	1-216-025-00	s	METAL, CHIP 100 5% 1/10W
R1546	1-216-049-00	s	METAL, CHIP 1K 5% 1/10W
R1547	1-216-057-00	s	METAL, CHIP 2.2K 5% 1/10W
R1548	1-216-049-00	s	METAL, CHIP 1K 5% 1/10W

(MDM-5P BOARD)

Ref. No. or Q'ty	Part No.	SP Description
R1549	1-216-049-00	s METAL, CHIP 1K 5% 1/10W
R1550	1-216-049-00	s METAL, CHIP 1K 5% 1/10W
R1551	1-216-627-11	s METAL, CHIP 100 0.5% 1/10W
R1552	1-216-049-00	s METAL, CHIP 1K 5% 1/10W
R1553	1-216-049-00	s METAL, CHIP 1K 5% 1/10W
R1554	1-216-025-00	s METAL, CHIP 100 5% 1/10W
R1555	1-216-049-00	s METAL, CHIP 1K 5% 1/10W
R1556	1-215-644-11	s METAL, CHIP 510 0.5% 1/10W
R1557	1-216-645-11	s METAL, CHIP 620 0.5% 1/10W
R1558	1-216-295-00	s METAL, CHIP 0-OHM
R1559	1-216-644-11	s METAL, CHIP 510 0.5% 1/10W
R1560	1-216-671-11	s METAL, CHIP 6.8K 0.5% 1/10W
R1561	1-216-653-11	s METAL, CHIP 1.2K 0.5% 1/10W
R1562	1-216-057-00	s METAL, CHIP 2.2K 5% 1/10W
R1563	1-216-049-00	s METAL, CHIP 1K 5% 1/10W
R1564	1-216-620-11	s METAL, CHIP 51 0.5% 1/10W
R1565	1-216-025-00	s METAL, CHIP 100 5% 1/10W
R1566	1-216-057-00	s METAL, CHIP 2.2K 5% 1/10W
R1567	1-216-073-00	s METAL, CHIP 10K 5% 1/10W
R1568	1-216-059-00	s METAL, CHIP 2.7K 5% 1/10W
R1569	1-216-055-00	s METAL, CHIP 1.8K 5% 1/10W
R1570	1-216-061-00	s METAL, CHIP 3.3K 5% 1/10W
R1571	1-216-057-00	s METAL, CHIP 2.2K 5% 1/10W
R1572	1-216-073-00	s METAL, CHIP 10K 5% 1/10W
R1573	1-216-073-00	s METAL, CHIP 10K 5% 1/10W
R1574	1-216-081-00	s METAL, CHIP 22K 5% 1/10W
R1575	1-216-065-00	s METAL, CHIP 4.7K 5% 1/10W
R1576	1-216-065-00	s METAL, CHIP 4.7K 5% 1/10W
R1577	1-216-053-00	s METAL, CHIP 1.5K 5% 1/10W
R1578	1-216-085-00	s METAL, CHIP 33K 5% 1/10W
R1579	1-216-065-00	s METAL, CHIP 4.7K 5% 1/10W
R1580	1-216-081-00	s METAL, CHIP 22K 5% 1/10W
R1581	1-216-073-00	s METAL, CHIP 10K 5% 1/10W
R1582	1-216-073-00	s METAL, CHIP 10K 5% 1/10W
R1583	1-216-073-00	s METAL, CHIP 10K 5% 1/10W
R1584	1-216-073-00	s METAL, CHIP 10K 5% 1/10W
R1585	1-216-073-00	s METAL, CHIP 10K 5% 1/10W
R1586	1-216-009-00	s METAL, CHIP 22 5% 1/10W
R1587	1-216-049-00	s METAL, CHIP 1K 5% 1/10W
R1588	1-216-672-11	s METAL, CHIP 7.5K 0.5% 1/10W
R1590	1-216-089-00	s METAL, CHIP 47K 5% 1/10W
R1591	1-216-631-11	s METAL, CHIP 150 0.5% 1/10W
R1601	1-216-009-00	s METAL, CHIP 22 5% 1/10W
R1602	1-216-057-00	s METAL, CHIP 2.2K 5% 1/10W
R1603	1-216-651-11	s METAL, CHIP 1K 0.5% 1/10W
R1604	1-216-651-11	s METAL, CHIP 1K 0.5% 1/10W
R1605	1-216-009-00	s METAL, CHIP 22 5% 1/10W
R1606	1-216-057-00	s METAL, CHIP 2.2K 5% 1/10W
R1607	1-216-627-11	s METAL, CHIP 100 0.5% 1/10W
R1608	1-216-057-00	s METAL, CHIP 2.2K 5% 1/10W
R1609	1-216-009-00	s METAL, CHIP 22 5% 1/10W
R1610	1-216-057-00	s METAL, CHIP 2.2K 5% 1/10W
R1611	1-216-651-11	s METAL, CHIP 1K 0.5% 1/10W
R1612	1-216-651-11	s METAL, CHIP 1K 0.5% 1/10W
R1613	1-216-009-00	s METAL, CHIP 22 5% 1/10W
R1614	1-216-057-00	s METAL, CHIP 2.2K 5% 1/10W
R1615	1-216-627-11	s METAL, CHIP 100 0.5% 1/10W
R1616	1-216-057-00	s METAL, CHIP 2.2K 5% 1/10W
R1617	1-216-009-00	s METAL, CHIP 22 5% 1/10W

(MDM-5P BOARD)

Ref. No. or Q'ty	Part No.	SP Description
R1618	1-216-057-00	s METAL, CHIP 2.2K 5% 1/10W
R1619	1-216-651-11	s METAL, CHIP 1K 0.5% 1/10W
R1620	1-216-651-11	s METAL, CHIP 1K 0.5% 1/10W
R1621	1-216-009-00	s METAL, CHIP 22 5% 1/10W
R1622	1-216-057-00	s METAL, CHIP 2.2K 5% 1/10W
R1623	1-216-627-11	s METAL, CHIP 100 0.5% 1/10W
R1624	1-216-057-00	s METAL, CHIP 2.2K 5% 1/10W
R1625	1-216-057-00	s METAL, CHIP 2.2K 5% 1/10W
R1626	1-216-049-00	s METAL, CHIP 1K 5% 1/10W
R1627	1-216-652-11	s METAL, CHIP 1.1K 0.5% 1/10W
R1628	1-216-025-00	s METAL, CHIP 100 5% 1/10W
R1629	1-216-627-11	s METAL, CHIP 100 0.5% 1/10W
R1630	1-216-065-00	s METAL, CHIP 4.7K 5% 1/10W
R1631	1-216-065-00	s METAL, CHIP 4.7K 5% 1/10W
R1632	1-216-025-00	s METAL, CHIP 100 5% 1/10W
R1633	1-216-025-00	s METAL, CHIP 100 5% 1/10W
R1634	1-216-045-00	s METAL, CHIP 680 5% 1/10W
R1635	1-216-009-00	s METAL, CHIP 22 5% 1/10W
R1636	1-216-009-00	s METAL, CHIP 22 5% 1/10W
R1637	1-216-057-00	s METAL, CHIP 2.2K 5% 1/10W
R1638	1-216-651-11	s METAL, CHIP 1K 0.5% 1/10W
R1639	1-216-651-11	s METAL, CHIP 1K 0.5% 1/10W
R1640	1-216-009-00	s METAL, CHIP 22 5% 1/10W
R1641	1-216-057-00	s METAL, CHIP 2.2K 5% 1/10W
R1642	1-216-627-11	s METAL, CHIP 100 0.5% 1/10W
R1643	1-216-057-00	s METAL, CHIP 2.2K 5% 1/10W
R1644	1-216-049-00	s METAL, CHIP 1K 5% 1/10W
R1645	1-216-652-11	s METAL, CHIP 1.1K 0.5% 1/10W
R1646	1-216-025-00	s METAL, CHIP 100 5% 1/10W
R1647	1-216-627-11	s METAL, CHIP 100 0.5% 1/10W
R1648	1-216-065-00	s METAL, CHIP 4.7K 5% 1/10W
R1649	1-216-065-00	s METAL, CHIP 4.7K 5% 1/10W
R1650	1-216-025-00	s METAL, CHIP 100 5% 1/10W
R1651	1-216-025-00	s METAL, CHIP 100 5% 1/10W
R1652	1-216-045-00	s METAL, CHIP 680 5% 1/10W
R1653	1-216-009-00	s METAL, CHIP 22 5% 1/10W
R1654	1-216-057-00	s METAL, CHIP 2.2K 5% 1/10W
R1685	1-216-651-11	s METAL, CHIP 1K 0.5% 1/10W
R1686	1-216-651-11	s METAL, CHIP 1K 0.5% 1/10W
R1687	1-216-057-00	s METAL, CHIP 2.2K 5% 1/10W
R1688	1-216-057-00	s METAL, CHIP 2.2K 5% 1/10W
R1689	1-216-057-00	s METAL, CHIP 2.2K 5% 1/10W
R1690	1-216-025-00	s METAL, CHIP 100 5% 1/10W
R1691	1-216-025-00	s METAL, CHIP 100 5% 1/10W
R1692	1-216-025-00	s METAL, CHIP 100 5% 1/10W
R1693	1-216-049-00	s METAL, CHIP 1K 5% 1/10W
R1694	1-216-638-11	s METAL, CHIP 300 0.5% 1/10W
R1695	1-216-049-00	s METAL, CHIP 1K 5% 1/10W
R1696	1-216-654-11	s METAL, CHIP 1.3K 0.5% 1/10W
R1697	1-216-049-00	s METAL, CHIP 1K 5% 1/10W
R1698	1-216-049-00	s METAL, CHIP 1K 5% 1/10W
R1699	1-216-638-11	s METAL, CHIP 300 0.5% 1/10W
R1700	1-216-638-11	s METAL, CHIP 300 0.5% 1/10W
R1701	1-216-638-11	s METAL, CHIP 300 0.5% 1/10W
R1702	1-216-638-11	s METAL, CHIP 300 0.5% 1/10W
R1703	1-216-638-11	s METAL, CHIP 300 0.5% 1/10W
R1704	1-216-638-11	s METAL, CHIP 300 0.5% 1/10W
R1705	1-216-638-11	s METAL, CHIP 300 0.5% 1/10W
R1706	1-216-638-11	s METAL, CHIP 300 0.5% 1/10W

(MDM-5P BOARD)

Ref. No. or Q'ty	Part No.	SP	Description
R1707	1-216-644-11	S	METAL, CHIP 510 0.5% 1/10W
R1708	1-216-644-11	S	METAL, CHIP 510 0.5% 1/10W
R1709	1-216-663-11	S	METAL, CHIP 3.3K 0.5% 1/10W
R1710	1-216-049-00	S	METAL, CHIP 1K 5% 1/10W
R1711	1-216-651-11	S	METAL, CHIP 1K 0.5% 1/10W
R1712	1-216-049-00	S	METAL, CHIP 1K 5% 1/10W
R1713	1-216-049-00	S	METAL, CHIP 1K 5% 1/10W
R1714	1-216-049-00	S	METAL, CHIP 1K 5% 1/10W
R1715	1-216-667-11	S	METAL, CHIP 4.7K 0.5% 1/10W
R1716	1-216-667-11	S	METAL, CHIP 4.7K 0.5% 1/10W
R1717	1-216-667-11	S	METAL, CHIP 4.7K 0.5% 1/10W
R1718	1-216-667-11	S	METAL, CHIP 4.7K 0.5% 1/10W
R1719	1-216-025-00	S	METAL, CHIP 100 5% 1/10W
R1720	1-216-073-00	S	METAL, CHIP 10K 5% 1/10W
R1721	1-216-667-11	S	METAL, CHIP 4.7K 0.5% 1/10W
R1722	1-216-667-11	S	METAL, CHIP 4.7K 0.5% 1/10W
R1723	1-216-624-11	S	METAL, CHIP 75 0.5% 1/10W
R1724	1-216-624-11	S	METAL, CHIP 75 0.5% 1/10W
R1725	1-216-624-11	S	METAL, CHIP 75 0.5% 1/10W
R1726	1-216-009-00	S	METAL, CHIP 22 5% 1/10W
R1727	1-216-611-11	S	METAL, CHIP 22 0.5% 1/10W
R1728	1-216-057-00	S	METAL, CHIP 2.2K 5% 1/10W
R1729	1-216-624-11	S	METAL, CHIP 75 0.5% 1/10W
R1730	1-216-009-00	S	METAL, CHIP 22 5% 1/10W
R1731	1-216-611-11	S	METAL, CHIP 22 0.5% 1/10W
R1732	1-216-057-00	S	METAL, CHIP 2.2K 5% 1/10W
RV1	1-237-033-11	S	RES, ADJ, METAL 1K
RV2	1-237-033-11	S	RES, ADJ, METAL 1K
RV21	1-237-033-11	S	RES, ADJ, METAL 1K
RV22	1-237-033-11	S	RES, ADJ, METAL 1K
RV51	1-237-033-11	S	RES, ADJ, METAL 1K
RV52	1-237-033-11	S	RES, ADJ, METAL 1K
RV71	1-237-033-11	S	RES, ADJ, METAL 1K
RV72	1-237-033-11	S	RES, ADJ, METAL 1K
RV251	1-237-031-11	S	RES, ADJ, METAL 200
RV252	1-237-031-11	S	RES, ADJ, METAL 200
RV255	1-237-037-11	S	RES, ADJ, METAL 20K
RV257	1-237-037-11	S	RES, ADJ, METAL 20K
RV261	1-237-035-11	S	RES, ADJ, METAL 5K
RV262	1-237-035-11	S	RES, ADJ, METAL 5K
RV265	1-237-037-11	S	RES, ADJ, METAL 20K
RV266	1-237-037-11	S	RES, ADJ, METAL 20K
RV267	1-237-036-11	S	RES, ADJ, METAL 10K
RV301	1-237-036-11	S	RES, ADJ, METAL 10K
RV303	1-237-036-11	S	RES, ADJ, METAL 10K
RV304	1-237-036-11	S	RES, ADJ, METAL 10K
RV401	1-237-036-11	S	RES, ADJ, METAL 10K
RV406	1-237-034-11	S	RES, ADJ, METAL 2K
RV411	1-238-784-11	S	RES, ADJ METAL 1K
RV412	1-238-784-11	S	RES, ADJ METAL 1K
RV413	1-237-036-11	S	RES, ADJ, METAL 10K
RV414	1-237-036-11	S	RES, ADJ, METAL 10K
RV417	1-238-787-11	S	RES, ADJ METAL 10K
RV651	1-237-031-11	S	RES, ADJ, METAL 200
RV652	1-237-031-11	S	RES, ADJ, METAL 200
RV655	1-237-037-11	S	RES, ADJ, METAL 20K
RV657	1-237-037-11	S	RES, ADJ, METAL 20K
RV661	1-237-035-11	S	RES, ADJ, METAL 5K

(MDM-5P BOARD)

Ref. No. or Q'ty	Part No.	SP	Description
RV662	1-237-035-11	S	RES, ADJ, METAL 5K
RV665	1-237-037-11	S	RES, ADJ, METAL 20K
RV666	1-237-037-11	S	RES, ADJ, METAL 20K
RV701	1-237-036-11	S	RES, ADJ, METAL 10K
RV703	1-237-036-11	S	RES, ADJ, METAL 10K
RV704	1-237-036-11	S	RES, ADJ, METAL 10K
RV801	1-237-036-11	S	RES, ADJ, METAL 10K
RV811	1-238-784-11	S	RES, ADJ METAL 1K
RV812	1-238-784-11	S	RES, ADJ METAL 1K
RV814	1-237-036-11	S	RES, ADJ, METAL 10K
RV817	1-238-787-11	S	RES, ADJ METAL 10K
RV1101	1-238-788-21	S	RES, ADJ METAL 20K
RV1102	1-238-788-21	S	RES, ADJ METAL 20K
RV1103	1-237-032-11	S	RES, ADJ, METAL 500
RV1105	1-237-036-11	S	RES, ADJ, METAL 10K
RV1106	1-237-036-11	S	RES, ADJ, METAL 10K
RV1107	1-237-035-11	S	RES, ADJ, METAL 5K
RV1108	1-237-034-11	S	RES, ADJ, METAL 2K
RV1109	1-237-034-11	S	RES, ADJ, METAL 2K
RV1110	1-237-035-11	S	RES, ADJ, METAL 5K
RV1111	1-237-035-11	S	RES, ADJ, METAL 5K
RV1112	1-237-035-11	S	RES, ADJ, METAL 5K
RV1113	1-237-035-11	S	RES, ADJ, METAL 5K
RV1114	1-237-035-11	S	RES, ADJ, METAL 5K
RV1115	1-237-036-11	S	RES, ADJ, METAL 10K
RV1117	1-237-037-11	S	RES, ADJ, METAL 20K
RV1501	1-238-788-11	S	RES, ADJ METAL 5K
RV1502	1-238-788-11	S	RES, ADJ METAL 5K
RV1503	1-237-034-11	S	RES, ADJ, METAL 2K
RV1508	1-237-034-11	S	RES, ADJ, METAL 2K
RV1509	1-237-035-11	S	RES, ADJ, METAL 5K
RV1510	1-237-035-11	S	RES, ADJ, METAL 5K
RV1511	1-237-035-11	S	RES, ADJ, METAL 5K
RV1512	1-237-035-11	S	RES, ADJ, METAL 5K
RV1513	1-237-035-11	S	RES, ADJ, METAL 5K
RV1514	1-237-035-11	S	RES, ADJ, METAL 5K
RV1515	1-237-036-11	S	RES, ADJ, METAL 10K
RV1517	1-237-037-11	S	RES, ADJ, METAL 20K
RV1601	1-237-034-11	S	RES, ADJ, METAL 2K
RV1602	1-237-034-11	S	RES, ADJ, METAL 2K
RV1604	1-237-034-11	S	RES, ADJ, METAL 2K
RV1606	1-237-034-11	S	RES, ADJ, METAL 2K
RV1607	1-237-034-11	S	RES, ADJ, METAL 2K
RV1608	1-237-034-11	S	RES, ADJ, METAL 2K
RV1611	1-237-032-11	S	RES, ADJ, METAL 500
RV1612	1-237-032-11	S	RES, ADJ, METAL 500
RV1613	1-237-034-11	S	RES, ADJ, METAL 2K
RV1614	1-237-034-11	S	RES, ADJ, METAL 2K
S401	1-553-977-00	S	SWITCH, SLIDE
S801	1-553-977-00	S	SWITCH, SLIDE
S901	1-553-572-00	S	SWITCH, DIP 4-CKT
S902	1-571-967-11	S	SWITCH, DIP 8-CKT
S1601	1-553-977-00	S	SWITCH, SLIDE
S1602	1-553-977-00	S	SWITCH, SLIDE
S1603	1-553-977-00	S	SWITCH, SLIDE
S1604	1-553-977-00	S	SWITCH, SLIDE
TH901	1-800-202-XX	S	THERMISTOR S-10K

(MDM-5P BOARD)

Ref. No. or Q'ty	Part No.	SP	Description
X301	1-579-457-11	s	CRYSTAL 7.4MHz
X302	1-567-914-12	s	CRYSTAL, 5.000000MHz
X303	1-567-958-12	s	CRYSTAL, 8.800000MHz
X304	1-567-916-12	s	CRYSTAL, 6.400000MHz
X701	1-579-456-11	s	CRYSTAL 6.1MHz
X702	1-579-454-11	s	CRYSTAL 4.500MHz
X703	1-579-455-11	s	CRYSTAL 5.433333MHz
X704	1-579-453-11	s	CRYSTAL 3.833333MHz
X901	1-567-962-11	s	CRYSTAL 8MHz

PC-62 BOARD

Ref. No. or Q'ty	Part No.	SP	Description
CN934	1-565-038-11	s	CONNECTOR, FPC 5P
PH1	8-719-939-05	s	PHOTOINTERRUPTER GP-1S54
PH2	8-719-939-05	s	PHOTOINTERRUPTER GP-1S54
PH3	8-719-939-05	s	PHOTOINTERRUPTER GP-1S54
R1	1-249-414-11	s	CARBON 560 5% 1/4W
R2	1-249-414-11	s	CARBON 560 5% 1/4W
R3	1-249-414-11	s	CARBON 560 5% 1/4W

PD-56 BOARD

Ref. No. or Q'ty	Part No.	SP	Description
1pc	1-640-162-12	o	PRINTED CIRCUIT BOARD, PD-56
C1	1-162-730-11	s	CERAMIC 680PF 1% 50V
C2	1-162-730-11	s	CERAMIC 680PF 1% 50V
CN914	1-506-472-11	s	CONNECTOR, 7P, MALE
CN915	1-506-467-11	s	CONNECTOR, 2P, MALE
CN916	1-508-900-00	s	CONNECTOR (M) 2P
R1	1-249-428-11	s	CARBON 8.2K 5% 1/4W
R2	1-249-428-11	s	CARBON 8.2K 5% 1/4W

PT-9 BOARD

Ref. No. or Q'ty	Part No.	SP	Description
This board is included in the KY-188D board.			
1pc	1-605-018-00	o	PRINTED CIRCUIT BOARD, PT-9
1pc	8-729-205-32	s	TRANSISTOR 2SB553-Y

PTC-39 BOARD

Ref. No. or Q'ty	Part No.	SP	Description
1pc	1-633-548-12	o	PRINTED CIRCUIT BOARD, PTC-39
1pc	2-124-699-02	o	HOLDER, SENSOR
C1	1-162-875-11	s	CERAMIC 68PF 5% 50V
C2	1-162-875-11	s	CERAMIC 68PF 5% 50V
C3	1-126-154-11	s	ELECT 47uF 20% 6.3V
C4	1-161-051-00	s	CERAMIC 0.01uF 10% 50V
C5	1-161-051-00	s	CERAMIC 0.01uF 10% 50V
CN1	1-506-471-11	s	CONNECTOR, 6P, MALE
DME1	8-745-001-02	s	DM-211A-L
IC1	8-759-145-58	s	IC UPC4558C
IC2	8-759-984-97	s	IC LM2903P
IC3	8-719-985-75	s	GP-1A53HR
IC4	8-719-985-74	s	GP-1A52HR
Q1	8-729-900-33	s	TRANSISTOR DTC144EF
R1	1-247-895-00	s	CARBON 470K 5% 1/4W
R2	1-249-425-11	s	CARBON 4.7K 5% 1/4W
R3	1-247-887-00	s	CARBON 220K 5% 1/4W
R4	1-249-433-11	s	CARBON 22K 5% 1/4W
R5	1-249-433-11	s	CARBON 22K 5% 1/4W
R6	1-249-433-11	s	CARBON 22K 5% 1/4W
R7	1-247-895-00	s	CARBON 470K 5% 1/4W
R8	1-249-425-11	s	CARBON 4.7K 5% 1/4W
R9	1-247-887-00	s	CARBON 220K 5% 1/4W
R10	1-249-433-11	s	CARBON 22K 5% 1/4W
R11	1-249-433-11	s	CARBON 22K 5% 1/4W
R12	1-249-433-11	s	CARBON 22K 5% 1/4W
R13	1-249-406-11	s	CARBON 120 5% 1/4W
RV1	1-228-472-00	s	RES, ADJ, METAL 2K
RV2	1-228-472-00	s	RES, ADJ, METAL 2K

PTC-42 BOARD

Ref. No. or Q'ty	Part No.	SP	Description
1pc	1-640-168-12	o	PRINTED CIRCUIT BOARD, PTC-42
CN924	1-506-483-21	s	CONNECTOR, 4P, MALE
R1	1-249-409-11	s	CARBON 220 5% 1/4W
R2	1-249-409-11	s	CARBON 220 5% 1/4W

PTC-43 BOARD

Ref. No. or Q'ty	Part No.	SP	Description
1pc	1-640-169-11	o	PRINTED CIRCUIT BOARD, PTC-43
CN921	1-506-482-11	s	CONNECTOR, 3P, MALE
PH1	8-719-939-05	s	PHOTOINTERRUPTER GP-1S54
R1	1-249-409-11	s	CARBON 220 5% 1/4W

PTC-49 BOARD

Ref. No. or Q'ty	Part No.	SP	Description
1pc	1-640-164-11	o	PRINTED CIRCUIT BOARD, PTC-49
CN901	1-506-488-11	s	CONNECTOR, 9P, MALE
CN902	1-506-482-11	s	CONNECTOR, 3P, MALE
CN903	1-506-481-11	s	CONNECTOR, 2P, MALE
PH1	8-719-939-05	s	PHOTOINTERRUPTER GP-1S54
PH2	8-719-939-05	s	PHOTOINTERRUPTER GP-1S54
R1	1-249-409-11	s	CARBON 220 5% 1/4W
R2	1-249-409-11	s	CARBON 220 5% 1/4W

PTC-54 BOARD

Ref. No. or Q'ty	Part No.	SP	Description
1pc	1-640-163-11	o	PRINTED CIRCUIT BOARD, PTC-54
CN904	1-506-482-11	s	CONNECTOR, 3P, MALE
PH1	8-719-939-05	s	PHOTOINTERRUPTER GP-1S54

PTC-55 BOARD

Ref. No. or Q'ty	Part No.	SP	Description
1pc	1-640-165-11	o	PRINTED CIRCUIT BOARD, PTC-55
CN922	1-506-470-11	s	CONNECTOR, 5P, MALE
D1	8-719-938-07	s	LED GL480, INFRARED
D2	8-719-938-07	s	LED GL480, INFRARED
D3	8-719-938-07	s	LED GL480, INFRARED
Q1	8-729-903-81	s	PHOTOTRANSISTOR PT480
Q2	8-729-903-81	s	PHOTOTRANSISTOR PT480
Q3	8-729-903-81	s	PHOTOTRANSISTOR PT480

RM-82 BOARD

Ref. No. or Q'ty	Part No.	SP	Description
2pcs	1-640-166-12	o	PRINTED CIRCUIT BOARD, RM-82
CN923	1-563-233-11	o	CONNECTOR, FPC 13P, FEMALE
CN923	1-563-233-11	o	CONNECTOR, FPC 13P, FEMALE
CN926	1-506-469-11	s	CONNECTOR, 4P, MALE
CN926	1-506-469-11	s	CONNECTOR, 4P, MALE
CN927	1-506-468-11	s	CONNECTOR, 3P, MALE
CN927	1-506-468-11	s	CONNECTOR, 3P, MALE

RP-53P BOARD

Ref. No. or Q'ty	Part No.	SP	Description
1pc	A-8727-367-A	o	MOUNTED CIRCUIT BOARD, RP-53P
1pc	3-171-455-01	o	PLATE (S), SHIELD, CARD
1pc	3-171-456-02	o	SHEET (S), CARD
1pc	3-171-485-02	o	GUARD, EDGE
1pc	7-621-759-45	s	+PSW, 2.6X6
1pc	1-535-894-11	o	TAB, FASTON
C1	1-163-037-11	s	CERAMIC, CHIP 0.022uF 10% 25V
C2	1-124-443-00	s	ELECT 100uF 20% 10V
C3	1-163-037-11	s	CERAMIC, CHIP 0.022uF 10% 25V
C4	1-124-443-00	s	ELECT 100uF 20% 10V
C5	1-163-037-11	s	CERAMIC, CHIP 0.022uF 10% 25V
C6	1-124-443-00	s	ELECT 100uF 20% 10V
C7	1-163-037-11	s	CERAMIC, CHIP 0.022uF 10% 25V
C8	1-124-443-00	s	ELECT 100uF 20% 10V
C9	1-163-037-11	s	CERAMIC, CHIP 0.022uF 10% 25V
C11	1-124-443-00	s	ELECT 100uF 20% 10V
C12	1-163-037-11	s	CERAMIC, CHIP 0.022uF 10% 25V
C13	1-127-518-11	s	ALUMN SOLID 100uF 20% 16V
C14	1-163-037-11	s	CERAMIC, CHIP 0.022uF 10% 25V
C15	1-124-443-00	s	ELECT 100uF 20% 10V
C16	1-127-518-11	s	ALUMN SOLID 100uF 20% 16V
C17	1-163-037-11	s	CERAMIC, CHIP 0.022uF 10% 25V
C18	1-163-037-11	s	CERAMIC, CHIP 0.022uF 10% 25V
C19	1-164-004-11	s	CERAMIC, CHIP 0.1uF 10% 25V
C20	1-164-004-11	s	CERAMIC, CHIP 0.1uF 10% 25V
C21	1-163-037-11	s	CERAMIC, CHIP 0.022uF 10% 25V
C22	1-163-037-11	s	CERAMIC, CHIP 0.022uF 10% 25V
C23	1-163-037-11	s	CERAMIC, CHIP 0.022uF 10% 25V
C24	1-163-037-11	s	CERAMIC, CHIP 0.022uF 10% 25V
C25	1-163-037-11	s	CERAMIC, CHIP 0.022uF 10% 25V
C26	1-163-037-11	s	CERAMIC, CHIP 0.022uF 10% 25V
C27	1-163-037-11	s	CERAMIC, CHIP 0.022uF 10% 25V
C28	1-163-037-11	s	CERAMIC, CHIP 0.022uF 10% 25V
C29	1-164-004-11	s	CERAMIC, CHIP 0.1uF 10% 25V
C31	1-164-004-11	s	CERAMIC, CHIP 0.1uF 10% 25V
C32	1-164-004-11	s	CERAMIC, CHIP 0.1uF 10% 25V
C34	1-164-004-11	s	CERAMIC, CHIP 0.1uF 10% 25V
C39	1-163-037-11	s	CERAMIC, CHIP 0.022uF 10% 25V
C40	1-163-037-11	s	CERAMIC, CHIP 0.022uF 10% 25V
C43	1-124-443-00	s	ELECT 100uF 20% 10V
C44	1-163-037-11	s	CERAMIC, CHIP 0.022uF 10% 25V
C45	1-124-443-00	s	ELECT 100uF 20% 10V
C46	1-163-037-11	s	CERAMIC, CHIP 0.022uF 10% 25V
C50	1-124-443-00	s	ELECT 100uF 20% 10V
C51	1-163-037-11	s	CERAMIC, CHIP 0.022uF 10% 25V
C55	1-163-037-11	s	CERAMIC, CHIP 0.022uF 10% 25V
C56	1-164-004-11	s	CERAMIC, CHIP 0.1uF 10% 25V
C57	1-163-037-11	s	CERAMIC, CHIP 0.022uF 10% 25V
C58	1-163-037-11	s	CERAMIC, CHIP 0.022uF 10% 25V
C59	1-163-227-11	s	CERAMIC, CHIP 10PF 5% 50V
C60	1-124-443-00	s	ELECT 100uF 20% 10V
C61	1-163-037-11	s	CERAMIC, CHIP 0.022uF 10% 25V
C101	1-163-037-11	s	CERAMIC, CHIP 0.022uF 10% 25V
C102	1-164-004-11	s	CERAMIC, CHIP 0.1uF 10% 25V
C103	1-164-004-11	s	CERAMIC, CHIP 0.1uF 10% 25V
C104	1-163-037-11	s	CERAMIC, CHIP 0.022uF 10% 25V
C105	1-163-037-11	s	CERAMIC, CHIP 0.022uF 10% 25V
C106	1-164-004-11	s	CERAMIC, CHIP 0.1uF 10% 25V

(RP-53P BOARD)

Ref. No. or Q'ty	Part No.	SP	Description
C107	1-163-037-11	s	CERAMIC, CHIP 0.022uF 10% 25V
C108	1-163-037-11	s	CERAMIC, CHIP 0.022uF 10% 25V
C109	1-124-443-00	s	ELECT 100uF 20% 10V
C110	1-163-037-11	s	CERAMIC, CHIP 0.022uF 10% 25V
C111	1-163-037-11	s	CERAMIC, CHIP 0.022uF 10% 25V
C112	1-124-443-00	s	ELECT 100uF 20% 10V
C113	1-124-443-00	s	ELECT 100uF 20% 10V
C114	1-163-037-11	s	CERAMIC, CHIP 0.022uF 10% 25V
C115	1-163-037-11	s	CERAMIC, CHIP 0.022uF 10% 25V
C116	1-124-443-00	s	ELECT 100uF 20% 10V
C117	1-163-037-11	s	CERAMIC, CHIP 0.022uF 10% 25V
C118	1-163-037-11	s	CERAMIC, CHIP 0.022uF 10% 25V
C119	1-163-037-11	s	CERAMIC, CHIP 0.022uF 10% 25V
C120	1-127-518-11	s	ALUMN SOLID 100uF 20% 16V
C122	1-163-037-11	s	CERAMIC, CHIP 0.022uF 10% 25V
C123	1-127-518-11	s	ALUMN SOLID 100uF 20% 16V
C125	1-164-004-11	s	CERAMIC, CHIP 0.1uF 10% 25V
C126	1-164-004-11	s	CERAMIC, CHIP 0.1uF 10% 25V
C127	1-163-037-11	s	CERAMIC, CHIP 0.022uF 10% 25V
C128	1-126-101-11	s	ELECT 100uF 20% 16V
C129	1-126-101-11	s	ELECT 100uF 20% 16V
C130	1-163-037-11	s	CERAMIC, CHIP 0.022uF 10% 25V
C131	1-163-037-11	s	CERAMIC, CHIP 0.022uF 10% 25V
C132	1-126-101-11	s	ELECT 100uF 20% 16V
C133	1-126-101-11	s	ELECT 100uF 20% 16V
C134	1-163-037-11	s	CERAMIC, CHIP 0.022uF 10% 25V
C135	1-163-037-11	s	CERAMIC, CHIP 0.022uF 10% 25V
C136	1-126-101-11	s	ELECT 100uF 20% 16V
C137	1-126-101-11	s	ELECT 100uF 20% 16V
C138	1-163-037-11	s	CERAMIC, CHIP 0.022uF 10% 25V
C139	1-163-037-11	s	CERAMIC, CHIP 0.022uF 10% 25V
C140	1-163-037-11	s	CERAMIC, CHIP 0.022uF 10% 25V
C141	1-163-037-11	s	CERAMIC, CHIP 0.022uF 10% 25V
C142	1-163-037-11	s	CERAMIC, CHIP 0.022uF 10% 25V
C143	1-124-443-00	s	ELECT 100uF 20% 10V
C144	1-163-037-11	s	CERAMIC, CHIP 0.022uF 10% 25V
C145	1-126-101-11	s	ELECT 100uF 20% 16V
C146	1-163-037-11	s	CERAMIC, CHIP 0.022uF 10% 25V
C147	1-124-443-00	s	ELECT 100uF 20% 10V
C148	1-163-037-11	s	CERAMIC, CHIP 0.022uF 10% 25V
C149	1-126-101-11	s	ELECT 100uF 20% 16V
C150	1-163-037-11	s	CERAMIC, CHIP 0.022uF 10% 25V
C155	1-163-037-11	s	CERAMIC, CHIP 0.022uF 10% 25V
C156	1-164-004-11	s	CERAMIC, CHIP 0.1uF 10% 25V
C157	1-163-037-11	s	CERAMIC, CHIP 0.022uF 10% 25V
C158	1-164-004-11	s	CERAMIC, CHIP 0.1uF 10% 25V
C159	1-163-227-11	s	CERAMIC, CHIP 10PF 5% 50V
C160	1-164-004-11	s	CERAMIC, CHIP 0.1uF 10% 25V
C161	1-164-004-11	s	CERAMIC, CHIP 0.1uF 10% 25V
C163	1-164-004-11	s	CERAMIC, CHIP 0.1uF 10% 25V
C168	1-124-443-00	s	ELECT 100uF 20% 10V
C169	1-124-443-00	s	ELECT 100uF 20% 10V
C170	1-124-443-00	s	ELECT 100uF 20% 10V
C171	1-163-037-11	s	CERAMIC, CHIP 0.022uF 10% 25V
C174	1-124-443-00	s	ELECT 100uF 20% 10V
C175	1-163-037-11	s	CERAMIC, CHIP 0.022uF 10% 25V
C176	1-163-037-11	s	CERAMIC, CHIP 0.022uF 10% 25V
C177	1-163-037-11	s	CERAMIC, CHIP 0.022uF 10% 25V
C178	1-124-443-00	s	ELECT 100uF 20% 10V

(RP-53P BOARD)

Ref. No. or Q'ty	Part No.	SP	Description
C179	1-163-037-11	s	CERAMIC, CHIP 0.022uF 10% 25V
C180	1-124-443-00	s	ELECT 100uF 20% 10V
C181	1-163-037-11	s	CERAMIC, CHIP 0.022uF 10% 25V
C182	1-163-037-11	s	CERAMIC, CHIP 0.022uF 10% 25V
C183	1-163-037-11	s	CERAMIC, CHIP 0.022uF 10% 25V
C301	1-136-804-11	s	FILM 680PF 5% 630V
C302	1-136-439-11	s	FILM 330PF 5% 630V
C303	1-124-902-00	s	ELECT 0.47uF 20% 50V
C304	1-164-161-11	s	CERAMIC, CHIP 0.0022uF 10% 100V
C305	1-164-161-11	s	CERAMIC, CHIP 0.0022uF 10% 100V
C306	1-162-814-11	s	CERAMIC 0.47uF 10% 50V
C311	1-124-907-11	s	ELECT 10uF 20% 50V
C312	1-163-251-11	s	CERAMIC, CHIP 100PF 5% 50V
C313	1-163-283-11	s	CERAMIC, CHIP 330PF 5% 50V
C314	1-136-439-11	s	FILM 330PF 5% 630V
C315	1-163-016-00	s	CERAMIC CHIP 0.0039MF 10% 50V
C352	1-163-109-00	s	CERAMIC, CHIP 47PF 5% 50V
C353	1-163-113-00	s	CERAMIC, CHIP 68PF 5% 50V
C354	1-163-121-00	s	CERAMIC, CHIP 150PF 5% 50V
C355	1-163-121-00	s	CERAMIC, CHIP 150PF 5% 50V
C356	1-163-127-00	s	CERAMIC, CHIP 270PF 5% 50V
C357	1-163-125-00	s	CERAMIC, CHIP 220PF 5% 50V
C358	1-130-485-00	s	MYLAR 0.015uF 5% 50V
C359	1-131-388-00	s	TANTALUM 68uF 10% 6.3V
C360	1-126-669-11	s	ELECT 10uF 20% 16V
C361	1-163-137-00	s	CERAMIC, CHIP 680PF 5% 50V
C362	1-130-481-00	s	MYLAR 0.0068uF 5% 50V
C363	1-124-907-11	s	ELECT 10uF 20% 50V
C364	1-124-907-11	s	ELECT 10uF 20% 50V
C365	1-124-907-11	s	ELECT 10uF 20% 50V
C366	1-163-833-00	s	CERAMIC, CHIP 0.068uF 25V
C367	1-124-907-11	s	ELECT 10uF 20% 50V
C368	1-163-109-00	s	CERAMIC, CHIP 47PF 5% 50V
C369	1-126-669-11	s	ELECT 10uF 20% 16V
C370	1-163-016-00	s	CERAMIC CHIP 0.0039MF 10% 50V
C391	1-124-907-11	s	ELECT 10uF 20% 50V
C401	1-136-804-11	s	FILM 680PF 5% 630V
C402	1-136-439-11	s	FILM 330PF 5% 630V
C403	1-124-902-00	s	ELECT 0.47uF 20% 50V
C404	1-164-161-11	s	CERAMIC, CHIP 0.0022uF 10% 100V
C405	1-164-161-11	s	CERAMIC, CHIP 0.0022uF 10% 100V
C406	1-162-814-11	s	CERAMIC 0.47uF 10% 50V
C411	1-124-907-11	s	ELECT 10uF 20% 50V
C412	1-163-251-11	s	CERAMIC, CHIP 100PF 5% 50V
C413	1-163-283-11	s	CERAMIC, CHIP 330PF 5% 50V
C414	1-136-439-11	s	FILM 330PF 5% 630V
C415	1-163-016-00	s	CERAMIC CHIP 0.0039MF 10% 50V
C452	1-163-109-00	s	CERAMIC, CHIP 47PF 5% 50V
C453	1-163-113-00	s	CERAMIC, CHIP 68PF 5% 50V
C454	1-163-121-00	s	CERAMIC, CHIP 150PF 5% 50V
C455	1-163-121-00	s	CERAMIC, CHIP 150PF 5% 50V
C456	1-163-127-00	s	CERAMIC, CHIP 270PF 5% 50V
C458	1-130-485-00	s	MYLAR 0.015uF 5% 50V
C459	1-131-388-00	s	TANTALUM 68uF 10% 6.3V
C460	1-126-669-11	s	ELECT 10uF 20% 16V
C461	1-163-137-00	s	CERAMIC, CHIP 680PF 5% 50V
C462	1-130-481-00	s	MYLAR 0.0068uF 5% 50V
C463	1-124-907-11	s	ELECT 10uF 20% 50V
C464	1-124-907-11	s	ELECT 10uF 20% 50V

(RP-53P BOARD)

Ref. No. or Q'ty	Part No.	SP	Description
C465	1-124-907-11	s	ELECT 10uF 20% 50V
C466	1-163-833-00	s	CERAMIC, CHIP 0.068uF 25V
C467	1-124-907-11	s	ELECT 10uF 20% 50V
C468	1-163-109-00	s	CERAMIC, CHIP 47PF 5% 50V
C469	1-126-669-11	s	ELECT 10uF 20% 16V
C470	1-163-016-00	s	CERAMIC CHIP 0.0039MF 10% 50V
C481	1-124-907-11	s	ELECT 10uF 20% 50V
C487	1-163-125-00	s	CERAMIC, CHIP 220PF 5% 50V
C501	1-163-109-00	s	CERAMIC, CHIP 47PF 5% 50V
C502	1-163-113-00	s	CERAMIC, CHIP 68PF 5% 50V
C503	1-163-121-00	s	CERAMIC, CHIP 150PF 5% 50V
C504	1-163-121-00	s	CERAMIC, CHIP 150PF 5% 50V
C505	1-163-127-00	s	CERAMIC, CHIP 270PF 5% 50V
C506	1-163-125-00	s	CERAMIC, CHIP 220PF 5% 50V
C507	1-130-485-00	s	MYLAR 0.015uF 5% 50V
C508	1-131-388-00	s	TANTALUM 68uF 10% 6.3V
C509	1-126-669-11	s	ELECT 10uF 20% 16V
C510	1-163-137-00	s	CERAMIC, CHIP 680PF 5% 50V
C511	1-130-481-00	s	MYLAR 0.0068uF 5% 50V
C512	1-124-907-11	s	ELECT 10uF 20% 50V
C513	1-163-105-00	s	CERAMIC, CHIP 47PF 5% 50V
C514	1-126-669-11	s	ELECT 10uF 20% 16V
C601	1-163-109-00	s	CERAMIC, CHIP 47PF 5% 50V
C602	1-163-113-00	s	CERAMIC, CHIP 68PF 5% 50V
C603	1-163-121-00	s	CERAMIC, CHIP 150PF 5% 50V
C604	1-163-121-00	s	CERAMIC, CHIP 150PF 5% 50V
C605	1-163-127-00	s	CERAMIC, CHIP 270PF 5% 50V
C606	1-163-125-00	s	CERAMIC, CHIP 220PF 5% 50V
C607	1-130-485-00	s	MYLAR 0.015uF 5% 50V
C608	1-131-388-00	s	TANTALUM 68uF 10% 6.3V
C609	1-126-669-11	s	ELECT 10uF 20% 16V
C610	1-163-137-00	s	CERAMIC, CHIP 680PF 5% 50V
C611	1-130-481-00	s	MYLAR 0.0068uF 5% 50V
C612	1-124-907-11	s	ELECT 10uF 20% 50V
C613	1-163-109-00	s	CERAMIC, CHIP 47PF 5% 50V
C614	1-126-669-11	s	ELECT 10uF 20% 16V
C701	1-163-037-11	s	CERAMIC, CHIP 0.022uF 10% 25V
C702	1-163-037-11	s	CERAMIC, CHIP 0.022uF 10% 25V
C703	1-124-907-11	s	ELECT 10uF 20% 50V
C704	1-163-251-11	s	CERAMIC, CHIP 100PF 5% 50V
C705	1-124-907-11	s	ELECT 10uF 20% 50V
C721	1-124-443-00	s	ELECT 100uF 20% 10V
C722	1-130-485-00	s	MYLAR 0.015uF 5% 50V
C723	1-126-669-11	s	ELECT 10uF 20% 16V
C751	1-126-103-11	s	ELECT 470uF 20% 16V
C752	1-126-101-11	s	ELECT 100uF 20% 16V
C753	1-124-907-11	s	ELECT 10uF 20% 50V
C754	1-124-907-11	s	ELECT 10uF 20% 50V
C755	1-126-103-11	s	ELECT 470uF 20% 16V
C756	1-126-101-11	s	ELECT 100uF 20% 16V
C757	1-124-907-11	s	ELECT 10uF 20% 50V
C758	1-124-907-11	s	ELECT 10uF 20% 50V
C759	1-164-004-11	s	CERAMIC, CHIP 0.1uF 10% 25V
CN1	1-506-468-11	o	CONNECTOR, 3P, MALE
CN2	1-506-468-11	o	CONNECTOR, 3P, MALE
CN31	1-506-468-11	o	CONNECTOR, 3P, MALE
CN41	1-506-468-11	o	CONNECTOR, 3P, MALE
CN51	1-506-469-11	s	CONNECTOR, 4P, MALE

(RP-53P BOARD)

Ref. No. or Q'ty	Part No.	SP	Description
CN61	1-506-469-31	o	CONNECTOR 4P, MALE
CN71	1-506-468-11	o	CONNECTOR, 3P, MALE
CN101	1-506-468-11	o	CONNECTOR, 3P, MALE
CN102	1-506-468-11	o	CONNECTOR, 3P, MALE
CN120	1-573-782-21	o	CONNECTOR, PHEC 60P, MALE
CN121	1-573-782-21	o	CONNECTOR, PHEC 60P, MALE
D1	8-719-123-85	s	DIODE 1SS304
D2	8-719-123-85	s	DIODE 1SS304
D3	8-719-123-85	s	DIODE 1SS304
D4	8-719-123-85	s	DIODE 1SS304
D5	8-719-123-82	s	DIODE 1SS303-T1
D6	8-719-123-82	s	DIODE 1SS303-T1
D7	8-719-123-82	s	DIODE 1SS303-T1
D8	8-719-123-82	s	DIODE 1SS303-T1
D101	8-719-123-85	s	DIODE 1SS304
D102	8-719-123-85	s	DIODE 1SS304
D103	8-719-123-85	s	DIODE 1SS304
D104	8-719-123-85	s	DIODE 1SS304
D301	8-719-123-82	s	DIODE 1SS303-T1
D311	8-719-110-39	s	DIODE RD15ESB1
D312	8-719-110-39	s	DIODE RD15ESB1
D313	8-719-800-76	s	DIODE 1SS226
D314	8-719-123-82	s	DIODE 1SS303-T1
D401	8-719-123-82	s	DIODE 1SS303-T1
D411	8-719-110-39	s	DIODE RD15ESB1
D412	8-719-110-39	s	DIODE RD15ESB1
D413	8-719-800-76	s	DIODE 1SS226
D414	8-719-123-82	s	DIODE 1SS303-T1
D722	8-719-123-85	s	DIODE 1SS304
D751	8-719-123-85	s	DIODE 1SS304
IC1	1-809-334-11	s	IC H8D7184A
IC2	1-809-456-11	s	HIC (PRE-AMP)
IC3	1-809-334-11	s	IC H8D7184A
IC4	1-809-456-11	s	HIC (PRE-AMP)
IC5	8-759-009-10	s	IC MC14069UBF
IC6	8-759-009-10	s	IC MC14069UBF
IC7	8-759-009-10	s	IC MC14069UBF
IC8	8-759-009-10	s	IC MC14069UBF
IC9	8-759-982-05	s	IC RC7805FA
IC10	8-759-982-10	s	IC RC7809FA
IC11	8-759-982-39	s	IC RC7909FA
IC12	8-759-982-38	s	IC UPC7905H
IC15	8-752-052-77	s	IC CXA1450M
IC16	8-752-054-80	s	IC CXA1521M
IC17	8-752-054-80	s	IC CXA1521M
IC101	1-809-334-11	s	IC H8D7184A
IC102	1-809-334-11	s	IC H8D7184A
IC103	1-809-456-11	s	HIC (PRE-AMP)
IC104	1-809-456-11	s	HIC (PRE-AMP)
IC115	8-752-052-77	s	IC CXA1450M
IC116	8-752-054-80	s	IC CXA1521M
IC117	8-752-054-80	s	IC CXA1521M
IC311	8-759-710-77	s	IC NJM4560MD
IC312	8-759-009-10	s	IC MC14069UBF
IC351	8-759-512-08	s	IC NJM2068M-D
IC352	8-759-106-02	s	IC UPC4570G2
IC451	8-759-512-08	s	IC NJM2068M-D
IC452	8-759-106-02	s	IC UPC4570G2

(RP-53P BOARD)

Ref. No. or Q'ty	Part No.	SP	Description
IC501	8-759-106-02	S	IC UPC457D62
IC601	8-759-106-02	S	IC UPC457D62
IC701	8-759-908-16	S	IC TL072CDS
IC721	8-759-637-09	S	IC M5238FP-722
IC751	8-759-112-06	S	IC UPC78N05H
IC752	8-759-143-30	S	IC UPC79N05H
IC753	8-759-300-71	S	IC HD14053BFP
L1	1-410-470-11	S	INDUCTOR 10uH
L2	1-410-470-11	S	INDUCTOR 10uH
L3	1-410-470-11	S	INDUCTOR 10uH
L4	1-410-470-11	S	INDUCTOR 10uH
L101	1-412-533-11	S	INDUCTOR 47uH
L102	1-412-533-11	S	INDUCTOR 47uH
L103	1-412-533-11	S	INDUCTOR 47uH
L104	1-410-470-11	S	INDUCTOR 10uH
L106	1-410-470-11	S	INDUCTOR 10uH
L107	1-410-470-11	S	INDUCTOR 10uH
L108	1-410-470-11	S	INDUCTOR 10uH
LV311	1-410-853-21	S	COIL, VAR
LV351	1-412-362-21	S	COIL, VAR
LV411	1-410-853-21	S	COIL, VAR
LV452	1-412-362-21	S	COIL, VAR
LV501	1-412-362-21	S	COIL, VAR
LV601	1-412-362-21	S	COIL, VAR
Q1	8-729-117-32	S	TRANSISTOR 2SC4177
Q2	8-729-209-07	S	TRANSISTOR 2SC4213-B
Q3	8-729-209-07	S	TRANSISTOR 2SC4213-B
Q4	8-729-209-07	S	TRANSISTOR 2SC4213-B
Q5	8-729-209-07	S	TRANSISTOR 2SC4213-B
Q6	8-729-209-07	S	TRANSISTOR 2SC4213-B
Q9	8-729-209-07	S	TRANSISTOR 2SC4213-B
Q101	8-729-117-32	S	TRANSISTOR 2SC4177
Q102	8-729-117-32	S	TRANSISTOR 2SC4177
Q103	8-729-117-32	S	TRANSISTOR 2SC4177
Q104	8-729-117-32	S	TRANSISTOR 2SC4177
Q105	8-729-117-32	S	TRANSISTOR 2SC4177
Q106	8-729-209-07	S	TRANSISTOR 2SC4213-B
Q107	8-729-209-07	S	TRANSISTOR 2SC4213-B
Q108	8-729-209-07	S	TRANSISTOR 2SC4213-B
Q109	8-729-209-07	S	TRANSISTOR 2SC4213-B
Q301	8-729-140-96	S	TRANSISTOR 2SD774-4
Q302	8-729-140-96	S	TRANSISTOR 2SD774-4
Q311	8-729-112-65	S	TRANSISTOR 2SA1462-Y33
Q351	8-729-112-65	S	TRANSISTOR 2SA1462-Y33
Q355	8-729-109-44	S	TRANSISTOR 2SK94
Q356	8-729-209-07	S	TRANSISTOR 2SC4213-B
Q357	8-729-209-07	S	TRANSISTOR 2SC4213-B
Q358	8-729-209-07	S	TRANSISTOR 2SC4213-B
Q359	8-729-209-07	S	TRANSISTOR 2SC4213-B
Q401	8-729-140-96	S	TRANSISTOR 2SD774-4
Q402	8-729-140-96	S	TRANSISTOR 2SD774-4
Q411	8-729-112-65	S	TRANSISTOR 2SA1462-Y33
Q451	8-729-112-65	S	TRANSISTOR 2SA1462-Y33
Q455	8-729-109-44	S	TRANSISTOR 2SK94
Q456	8-729-209-07	S	TRANSISTOR 2SC4213-B
Q457	8-729-209-07	S	TRANSISTOR 2SC4213-B
Q458	8-729-209-07	S	TRANSISTOR 2SC4213-B

(RP-53P BOARD)

Ref. No. or Q'ty	Part No.	SP	Description
Q459	8-729-209-07	S	TRANSISTOR 2SC4213-B
Q501	8-729-109-44	S	TRANSISTOR 2SK94
Q502	8-729-209-07	S	TRANSISTOR 2SC4213-B
Q601	8-729-109-44	S	TRANSISTOR 2SK94
Q602	8-729-209-07	S	TRANSISTOR 2SC4213-B
Q701	8-729-117-32	S	TRANSISTOR 2SC4177
Q702	8-729-117-32	S	TRANSISTOR 2SC4177
Q703	8-729-117-16	S	TRANSISTOR 2SA1611-M6
Q704	8-729-209-07	S	TRANSISTOR 2SC4213-B
Q705	8-729-209-07	S	TRANSISTOR 2SC4213-B
Q721	8-729-109-44	S	TRANSISTOR 2SK94
Q722	8-729-905-12	S	TRANSISTOR DTA144EU
Q723	8-729-905-12	S	TRANSISTOR DTA144EU
Q724	8-729-209-07	S	TRANSISTOR 2SC4213-B
Q725	8-729-209-07	S	TRANSISTOR 2SC4213-B
Q751	8-729-106-68	S	TRANSISTOR 2SC1815A-GP
Q752	8-729-106-60	S	TRANSISTOR 2SB1115A
Q753	8-729-905-18	S	TRANSISTOR DTC144EU
Q754	8-729-117-16	S	TRANSISTOR 2SA1611-M6
R1	1-216-643-11	S	METAL, CHIP 470 0.5% 1/10W
R2	1-216-624-11	S	METAL, CHIP 75 0.5% 1/10W
R3	1-216-001-00	S	METAL, CHIP 10 5% 1/10W
R4	1-216-049-00	S	METAL, CHIP 1K 5% 1/10W
R7	1-216-295-00	S	METAL, CHIP 0-OHM
R8	1-216-001-00	S	METAL, CHIP 10 5% 1/10W
R9	1-216-081-00	S	METAL, CHIP 22K 5% 1/10W
R10	1-216-049-00	S	METAL, CHIP 1K 5% 1/10W
R11	1-216-049-00	S	METAL, CHIP 1K 5% 1/10W
R12	1-216-081-00	S	METAL, CHIP 22K 5% 1/10W
R13	1-216-081-00	S	METAL, CHIP 22K 5% 1/10W
R14	1-216-295-00	S	METAL, CHIP 0-OHM
R15	1-216-001-00	S	METAL, CHIP 10 5% 1/10W
R16	1-216-081-00	S	METAL, CHIP 22K 5% 1/10W
R17	1-216-049-00	S	METAL, CHIP 1K 5% 1/10W
R18	1-216-081-00	S	METAL, CHIP 22K 5% 1/10W
R19	1-216-049-00	S	METAL, CHIP 1K 5% 1/10W
R20	1-216-081-00	S	METAL, CHIP 22K 5% 1/10W
R21	1-216-001-00	S	METAL, CHIP 10 5% 1/10W
R22	1-216-683-11	S	METAL, CHIP 22K 0.5% 1/10W
R23	1-216-295-00	S	METAL, CHIP 0-OHM
R24	1-216-620-11	S	METAL, CHIP 51 0.5% 1/10W
R25	1-216-001-00	S	METAL, CHIP 10 5% 1/10W
R26	1-216-683-11	S	METAL, CHIP 22K 0.5% 1/10W
R27	1-216-295-00	S	METAL, CHIP 0-OHM
R28	1-216-620-11	S	METAL, CHIP 51 0.5% 1/10W
R29	1-216-073-00	S	METAL, CHIP 10K 5% 1/10W
R30	1-216-073-00	S	METAL, CHIP 10K 5% 1/10W
R31	1-216-073-00	S	METAL, CHIP 10K 5% 1/10W
R32	1-216-097-00	S	METAL, CHIP 100K 5% 1/10W
R33	1-216-097-00	S	METAL, CHIP 100K 5% 1/10W
R34	1-216-049-00	S	METAL, CHIP 1K 5% 1/10W
R36	1-216-073-00	S	METAL, CHIP 10K 5% 1/10W
R37	1-216-049-00	S	METAL, CHIP 1K 5% 1/10W
R39	1-216-073-00	S	METAL, CHIP 10K 5% 1/10W
R40	1-216-049-00	S	METAL, CHIP 1K 5% 1/10W
R41	1-216-081-00	S	METAL, CHIP 22K 5% 1/10W
R42	1-216-671-11	S	METAL, CHIP 6.8K 0.5% 1/10W
R43	1-216-687-11	S	METAL, CHIP 33K 0.5% 1/10W
R44	1-216-025-00	S	METAL, CHIP 100 5% 1/10W

(RP-53P BOARD)

Ref. No. or Q'ty	Part No.	SP	Description
R45	1-216-671-11	s	METAL, CHIP 6.8K 0.5% 1/10W
R46	1-216-687-11	s	METAL, CHIP 33K 0.5% 1/10W
R47	1-216-025-00	s	METAL, CHIP 10Ω 5% 1/10W
R48	1-216-049-00	s	METAL, CHIP 1K 5% 1/10W
R49	1-216-049-00	s	METAL, CHIP 1K 5% 1/10W
R50	1-216-001-00	s	METAL, CHIP 10 5% 1/10W
R51	1-216-611-11	s	METAL, CHIP 22 0.5% 1/10W
R52	1-216-603-11	s	METAL, CHIP 10 0.5% 1/10W
R53	1-216-611-11	s	METAL, CHIP 22 0.5% 1/10W
R54	1-216-603-11	s	METAL, CHIP 10 0.5% 1/10W
R55	1-216-001-00	s	METAL, CHIP 10 5% 1/10W
R56	1-216-001-00	s	METAL, CHIP 10 5% 1/10W
R58	1-216-001-00	s	METAL, CHIP 10 5% 1/10W
R59	1-216-627-11	s	METAL, CHIP 10Ω 0.5% 1/10W
R60	1-216-001-00	s	METAL, CHIP 10 5% 1/10W
R61	1-216-001-00	s	METAL, CHIP 10 5% 1/10W
R62	1-216-611-11	s	METAL, CHIP 22 0.5% 1/10W
R63	1-216-603-11	s	METAL, CHIP 10 0.5% 1/10W
R64	1-216-611-11	s	METAL, CHIP 22 0.5% 1/10W
R65	1-216-603-11	s	METAL, CHIP 10 0.5% 1/10W
R66	1-216-073-00	s	METAL, CHIP 10K 5% 1/10W
R67	1-216-073-00	s	METAL, CHIP 10K 5% 1/10W
R101	1-216-643-11	s	METAL, CHIP 470 0.5% 1/10W
R102	1-216-624-11	s	METAL, CHIP 75 0.5% 1/10W
R103	1-216-001-00	s	METAL, CHIP 10 5% 1/10W
R104	1-216-049-00	s	METAL, CHIP 1K 5% 1/10W
R105	1-216-651-11	s	METAL, CHIP 1K 0.5% 1/10W
R106	1-216-651-11	s	METAL, CHIP 1K 0.5% 1/10W
R107	1-216-051-00	s	METAL, CHIP 1.2K 5% 1/10W
R108	1-216-009-00	s	METAL, CHIP 22 5% 1/10W
R109	1-216-055-00	s	METAL, CHIP 1.8K 5% 1/10W
R110	1-216-073-00	s	METAL, CHIP 10K 5% 1/10W
R111	1-216-001-00	s	METAL, CHIP 10 5% 1/10W
R112	1-216-057-00	s	METAL, CHIP 2.2K 5% 1/10W
R113	1-216-651-11	s	METAL, CHIP 1K 0.5% 1/10W
R114	1-216-651-11	s	METAL, CHIP 1K 0.5% 1/10W
R115	1-216-049-00	s	METAL, CHIP 1K 5% 1/10W
R116	1-216-051-00	s	METAL, CHIP 1.2K 5% 1/10W
R117	1-216-009-00	s	METAL, CHIP 22 5% 1/10W
R118	1-216-055-00	s	METAL, CHIP 1.8K 5% 1/10W
R119	1-216-073-00	s	METAL, CHIP 10K 5% 1/10W
R120	1-216-001-00	s	METAL, CHIP 10 5% 1/10W
R121	1-216-057-00	s	METAL, CHIP 2.2K 5% 1/10W
R122	1-216-651-11	s	METAL, CHIP 1K 0.5% 1/10W
R123	1-216-295-00	s	METAL, CHIP 0-OHM
R124	1-216-295-00	s	METAL, CHIP 0-OHM
R125	1-216-671-11	s	METAL, CHIP 6.8K 0.5% 1/10W
R126	1-216-687-11	s	METAL, CHIP 33K 0.5% 1/10W
R127	1-216-025-00	s	METAL, CHIP 10Ω 5% 1/10W
R128	1-216-671-11	s	METAL, CHIP 6.8K 0.5% 1/10W
R129	1-216-687-11	s	METAL, CHIP 33K 0.5% 1/10W
R130	1-216-025-00	s	METAL, CHIP 10Ω 5% 1/10W
R131	1-216-001-00	s	METAL, CHIP 10 5% 1/10W
R132	1-216-001-00	s	METAL, CHIP 10 5% 1/10W
R133	1-216-049-00	s	METAL, CHIP 1K 5% 1/10W
R134	1-216-081-00	s	METAL, CHIP 22K 5% 1/10W
R135	1-216-049-00	s	METAL, CHIP 1K 5% 1/10W
R136	1-216-081-00	s	METAL, CHIP 22K 5% 1/10W
R137	1-216-049-00	s	METAL, CHIP 1K 5% 1/10W

(RP-53P BOARD)

Ref. No. or Q'ty	Part No.	SP	Description
R138	1-216-081-00	s	METAL, CHIP 22K 5% 1/10W
R139	1-216-049-00	s	METAL, CHIP 1K 5% 1/10W
R140	1-216-081-00	s	METAL, CHIP 22K 5% 1/10W
R141	1-216-683-11	s	METAL, CHIP 22K 0.5% 1/10W
R142	1-216-295-00	s	METAL, CHIP 0-OHM
R143	1-216-683-11	s	METAL, CHIP 22K 0.5% 1/10W
R144	1-216-295-00	s	METAL, CHIP 0-OHM
R145	1-216-001-00	s	METAL, CHIP 10 5% 1/10W
R146	1-216-001-00	s	METAL, CHIP 10 5% 1/10W
R147	1-216-620-11	s	METAL, CHIP 51 0.5% 1/10W
R148	1-216-620-11	s	METAL, CHIP 51 0.5% 1/10W
R149	1-216-049-00	s	METAL, CHIP 1K 5% 1/10W
R151	1-216-073-00	s	METAL, CHIP 10K 5% 1/10W
R152	1-216-049-00	s	METAL, CHIP 1K 5% 1/10W
R154	1-216-073-00	s	METAL, CHIP 10K 5% 1/10W
R155	1-216-049-00	s	METAL, CHIP 1K 5% 1/10W
R156	1-216-049-00	s	METAL, CHIP 1K 5% 1/10W
R158	1-216-001-00	s	METAL, CHIP 10 5% 1/10W
R159	1-216-627-11	s	METAL, CHIP 10Ω 0.5% 1/10W
R160	1-216-001-00	s	METAL, CHIP 10 5% 1/10W
R161	1-216-001-00	s	METAL, CHIP 10 5% 1/10W
R162	1-216-001-00	s	METAL, CHIP 10 5% 1/10W
R163	1-216-611-11	s	METAL, CHIP 22 0.5% 1/10W
R164	1-216-603-11	s	METAL, CHIP 10 0.5% 1/10W
R165	1-216-611-11	s	METAL, CHIP 22 0.5% 1/10W
R166	1-216-603-11	s	METAL, CHIP 10 0.5% 1/10W
R167	1-216-611-11	s	METAL, CHIP 22 0.5% 1/10W
R168	1-216-603-11	s	METAL, CHIP 10 0.5% 1/10W
R169	1-216-611-11	s	METAL, CHIP 22 0.5% 1/10W
R170	1-216-603-11	s	METAL, CHIP 10 0.5% 1/10W
R173	1-216-073-00	s	METAL, CHIP 10K 5% 1/10W
R174	1-216-073-00	s	METAL, CHIP 10K 5% 1/10W
R175	1-216-001-00	s	METAL, CHIP 10 5% 1/10W
R176	1-216-001-00	s	METAL, CHIP 10 5% 1/10W
R301	1-216-025-00	s	METAL, CHIP 10Ω 5% 1/10W
R302	1-216-025-00	s	METAL, CHIP 10Ω 5% 1/10W
R303	1-249-385-11	s	CARBON 2.2 5% 1/4W
R304	1-249-385-11	s	CARBON 2.2 5% 1/4W
R311	1-216-675-11	s	METAL, CHIP 10K 0.5% 1/10W
R312	1-216-675-11	s	METAL, CHIP 10K 0.5% 1/10W
R313	1-216-675-11	s	METAL, CHIP 10K 0.5% 1/10W
R314	1-216-675-11	s	METAL, CHIP 10K 0.5% 1/10W
R315	1-216-097-00	s	METAL, CHIP 100K 5% 1/10W
R316	1-216-077-00	s	METAL, CHIP 15K 5% 1/10W
R317	1-249-393-11	s	CARBON 10 5% 1/4W
R318	1-216-065-00	s	METAL, CHIP 4.7K 5% 1/10W
R319	1-216-065-00	s	METAL, CHIP 4.7K 5% 1/10W
R320	1-216-111-00	s	METAL, CHIP 390K 5% 1/10W
R351	1-216-065-00	s	METAL, CHIP 4.7K 5% 1/10W
R352	1-216-065-00	s	METAL, CHIP 4.7K 5% 1/10W
R355	1-216-097-00	s	METAL, CHIP 100K 5% 1/10W
R356	1-216-697-11	s	METAL, CHIP 82K 0.5% 1/10W
R357	1-216-399-11	s	METAL, CHIP 100K 0.5% 1/10W
R358	1-216-658-11	s	METAL, CHIP 2K 0.5% 1/10W
R359	1-216-625-11	s	METAL, CHIP 82 0.5% 1/10W
R360	1-216-121-00	s	METAL, CHIP 1M 5% 1/10W
R361	1-216-121-00	s	METAL, CHIP 1M 5% 1/10W
R362	1-216-659-11	s	METAL, CHIP 2.2K 0.5% 1/10W
R363	1-216-675-11	s	METAL, CHIP 10K 0.5% 1/10W

(RP-53P BOARD)

Ref. No. or Q'ty	Part No.	SP	Description
R364	1-216-073-00	S	METAL, CHIP 10K 5% 1/10W
R365	1-216-073-00	S	METAL, CHIP 10K 5% 1/10W
R366	1-216-073-00	S	METAL, CHIP 10K 5% 1/10W
R367	1-216-073-00	S	METAL, CHIP 10K 5% 1/10W
R368	1-216-033-00	S	METAL, CHIP 220 5% 1/10W
R369	1-216-073-00	S	METAL, CHIP 10K 5% 1/10W
R370	1-216-073-00	S	METAL, CHIP 10K 5% 1/10W
R371	1-216-073-00	S	METAL, CHIP 10K 5% 1/10W
R372	1-216-073-00	S	METAL, CHIP 10K 5% 1/10W
R373	1-216-675-11	S	METAL, CHIP 10K 0.5% 1/10W
R374	1-216-661-11	S	METAL, CHIP 2.7K 0.5% 1/10W
R375	1-216-635-11	S	METAL, CHIP 220 0.5% 1/10W
R376	1-216-081-00	S	METAL, CHIP 22K 5% 1/10W
R377	1-216-111-00	S	METAL, CHIP 390K 5% 1/10W
R391	1-216-675-11	S	METAL, CHIP 10K 0.5% 1/10W
R392	1-216-675-11	S	METAL, CHIP 10K 0.5% 1/10W
R393	1-216-675-11	S	METAL, CHIP 10K 0.5% 1/10W
R394	1-216-675-11	S	METAL, CHIP 10K 0.5% 1/10W
R395	1-216-073-00	S	METAL, CHIP 10K 5% 1/10W
R401	1-216-025-00	S	METAL, CHIP 100 5% 1/10W
R402	1-216-025-00	S	METAL, CHIP 100 5% 1/10W
R403	1-249-385-11	S	CARBON 2.2 5% 1/4W
R404	1-249-385-11	S	CARBON 2.2 5% 1/4W
R411	1-216-675-11	S	METAL, CHIP 10K 0.5% 1/10W
R412	1-216-675-11	S	METAL, CHIP 10K 0.5% 1/10W
R413	1-216-675-11	S	METAL, CHIP 10K 0.5% 1/10W
R414	1-216-675-11	S	METAL, CHIP 10K 0.5% 1/10W
R415	1-216-097-00	S	METAL, CHIP 100K 5% 1/10W
R416	1-216-077-00	S	METAL, CHIP 15K 5% 1/10W
R417	1-249-393-11	S	CARBON 10 5% 1/4W
R418	1-216-065-00	S	METAL, CHIP 4.7K 5% 1/10W
R419	1-216-065-00	S	METAL, CHIP 4.7K 5% 1/10W
R420	1-216-111-00	S	METAL, CHIP 390K 5% 1/10W
R451	1-216-065-00	S	METAL, CHIP 4.7K 5% 1/10W
R452	1-216-065-00	S	METAL, CHIP 4.7K 5% 1/10W
R455	1-216-097-00	S	METAL, CHIP 100K 5% 1/10W
R456	1-216-697-11	S	METAL, CHIP 82K 0.5% 1/10W
R457	1-216-699-11	S	METAL, CHIP 100K 0.5% 1/10W
R458	1-216-658-11	S	METAL, CHIP 2K 0.5% 1/10W
R459	1-216-625-11	S	METAL, CHIP 82 0.5% 1/10W
R460	1-216-121-00	S	METAL, CHIP 1M 5% 1/10W
R461	1-216-121-00	S	METAL, CHIP 1M 5% 1/10W
R462	1-216-659-11	S	METAL, CHIP 2.2K 0.5% 1/10W
R463	1-216-675-11	S	METAL, CHIP 10K 0.5% 1/10W
R464	1-216-073-00	S	METAL, CHIP 10K 5% 1/10W
R465	1-216-073-00	S	METAL, CHIP 10K 5% 1/10W
R466	1-216-073-00	S	METAL, CHIP 10K 5% 1/10W
R467	1-216-073-00	S	METAL, CHIP 10K 5% 1/10W
R468	1-216-033-00	S	METAL, CHIP 220 5% 1/10W
R469	1-216-073-00	S	METAL, CHIP 10K 5% 1/10W
R470	1-216-073-00	S	METAL, CHIP 10K 5% 1/10W
R471	1-216-073-00	S	METAL, CHIP 10K 5% 1/10W
R472	1-216-073-00	S	METAL, CHIP 10K 5% 1/10W
R473	1-216-675-11	S	METAL, CHIP 10K 0.5% 1/10W
R474	1-216-661-11	S	METAL, CHIP 2.7K 0.5% 1/10W
R475	1-216-635-11	S	METAL, CHIP 220 0.5% 1/10W
R476	1-216-081-00	S	METAL, CHIP 22K 5% 1/10W
R477	1-216-111-00	S	METAL, CHIP 390K 5% 1/10W
R491	1-216-675-11	S	METAL, CHIP 10K 0.5% 1/10W

(RP-53P BOARD)

Ref. No. or Q'ty	Part No.	SP	Description
R492	1-216-675-11	S	METAL, CHIP 10K 0.5% 1/10W
R493	1-216-675-11	S	METAL, CHIP 10K 0.5% 1/10W
R494	1-216-675-11	S	METAL, CHIP 10K 0.5% 1/10W
R495	1-216-073-00	S	METAL, CHIP 10K 5% 1/10W
R501	1-216-097-00	S	METAL, CHIP 100K 5% 1/10W
R502	1-216-697-11	S	METAL, CHIP 82K 0.5% 1/10W
R503	1-216-699-11	S	METAL, CHIP 100K 0.5% 1/10W
R504	1-216-658-11	S	METAL, CHIP 2K 0.5% 1/10W
R505	1-216-625-11	S	METAL, CHIP 82 0.5% 1/10W
R506	1-216-121-00	S	METAL, CHIP 1M 5% 1/10W
R507	1-216-121-00	S	METAL, CHIP 1M 5% 1/10W
R508	1-216-659-11	S	METAL, CHIP 2.2K 0.5% 1/10W
R509	1-216-675-11	S	METAL, CHIP 10K 0.5% 1/10W
R510	1-216-073-00	S	METAL, CHIP 10K 5% 1/10W
R511	1-216-073-00	S	METAL, CHIP 10K 5% 1/10W
R512	1-216-675-11	S	METAL, CHIP 10K 0.5% 1/10W
R513	1-216-661-11	S	METAL, CHIP 2.7K 0.5% 1/10W
R514	1-216-635-11	S	METAL, CHIP 220 0.5% 1/10W
R515	1-216-081-00	S	METAL, CHIP 22K 5% 1/10W
R601	1-216-097-00	S	METAL, CHIP 100K 5% 1/10W
R602	1-216-697-11	S	METAL, CHIP 82K 0.5% 1/10W
R603	1-216-699-11	S	METAL, CHIP 100K 0.5% 1/10W
R604	1-216-658-11	S	METAL, CHIP 2K 0.5% 1/10W
R605	1-216-625-11	S	METAL, CHIP 82 0.5% 1/10W
R606	1-216-121-00	S	METAL, CHIP 1M 5% 1/10W
R607	1-216-121-00	S	METAL, CHIP 1M 5% 1/10W
R608	1-216-659-11	S	METAL, CHIP 2.2K 0.5% 1/10W
R609	1-216-675-11	S	METAL, CHIP 10K 0.5% 1/10W
R610	1-216-073-00	S	METAL, CHIP 10K 5% 1/10W
R611	1-216-073-00	S	METAL, CHIP 10K 5% 1/10W
R612	1-216-675-11	S	METAL, CHIP 10K 0.5% 1/10W
R613	1-216-681-11	S	METAL, CHIP 2.7K 0.5% 1/10W
R614	1-216-635-11	S	METAL, CHIP 220 0.5% 1/10W
R615	1-216-081-00	S	METAL, CHIP 22K 5% 1/10W
R701	1-216-061-00	S	METAL, CHIP 3.3K 5% 1/10W
R702	1-216-065-00	S	METAL, CHIP 4.7K 5% 1/10W
R703	1-216-065-00	S	METAL, CHIP 4.7K 5% 1/10W
R704	1-216-065-00	S	METAL, CHIP 4.7K 5% 1/10W
R705	1-216-112-00	S	METAL, CHIP 430K 5% 1/10W
R706	1-216-055-00	S	METAL, CHIP 1.8K 5% 1/10W
R707	1-216-001-00	S	METAL, CHIP 10 5% 1/10W
R708	1-216-053-00	S	METAL, CHIP 1.5K 5% 1/10W
R709	1-216-053-00	S	METAL, CHIP 1.5K 5% 1/10W
R710	1-216-097-00	S	METAL, CHIP 100K 5% 1/10W
R711	1-216-061-00	S	METAL, CHIP 22K 5% 1/10W
R712	1-216-097-00	S	METAL, CHIP 100K 5% 1/10W
R713	1-216-033-00	S	METAL, CHIP 220 5% 1/10W
R714	1-216-065-00	S	METAL, CHIP 4.7K 5% 1/10W
R715	1-216-081-00	S	METAL, CHIP 22K 5% 1/10W
R716	1-216-081-00	S	METAL, CHIP 22K 5% 1/10W
R717	1-216-073-00	S	METAL, CHIP 10K 5% 1/10W
R721	1-216-065-00	S	METAL, CHIP 4.7K 5% 1/10W
R722	1-216-033-00	S	METAL, CHIP 220 5% 1/10W
R723	1-216-047-00	S	METAL, CHIP 820 5% 1/10W
R724	1-216-085-00	S	METAL, CHIP 33K 5% 1/10W
R725	1-216-112-00	S	METAL, CHIP 430K 5% 1/10W
R726	1-216-121-00	S	METAL, CHIP 1M 5% 1/10W
R727	1-216-121-00	S	METAL, CHIP 1M 5% 1/10W
R728	1-216-081-00	S	METAL, CHIP 22K 5% 1/10W

(RP-53P BOARD)

Ref. No. or Q'ty	Part No.	SP	Description
R729	1-216-089-00	s	METAL, CHIP 47K 5% 1/10W
R730	1-216-073-00	s	METAL, CHIP 10K 5% 1/10W
R731	1-216-073-00	s	METAL, CHIP 10K 5% 1/10W
R751	1-249-411-11	s	CARBON 330 5% 1/4W
R752	1-249-411-11	s	CARBON 330 5% 1/4W
R753	1-216-089-00	s	METAL, CHIP 47K 5% 1/10W
R754	1-216-049-00	s	METAL, CHIP 1K 5% 1/10W
R755	1-216-049-00	s	METAL, CHIP 1K 5% 1/10W
R756	1-216-065-00	s	METAL, CHIP 33K 5% 1/10W
R757	1-216-065-00	s	METAL, CHIP 4.7K 5% 1/10W
R758	1-216-089-00	s	METAL, CHIP 47K 5% 1/10W
RV1	1-238-799-11	s	RES, ADJ METAL 1K
RV2	1-238-799-11	s	RES, ADJ METAL 1K
RV3	1-238-799-11	s	RES, ADJ METAL 1K
RV4	1-238-799-11	s	RES, ADJ METAL 1K
RV5	1-237-030-11	s	RES, ADJ, CERMET 100
RV6	1-237-030-11	s	RES, ADJ, CERMET 100
RV7	1-238-803-11	s	RES, ADJ METAL 20K
RV8	1-238-803-11	s	RES, ADJ METAL 20K
RV101	1-238-799-11	s	RES, ADJ METAL 1K
RV102	1-238-799-11	s	RES, ADJ METAL 1K
RV103	1-238-799-11	s	RES, ADJ METAL 1K
RV104	1-238-799-11	s	RES, ADJ METAL 1K
RV105	1-237-030-11	s	RES, ADJ, CERMET 100
RV106	1-237-030-11	s	RES, ADJ, CERMET 100
RV107	1-238-803-11	s	RES, ADJ METAL 20K
RV108	1-238-803-11	s	RES, ADJ METAL 20K
RV109	1-238-800-11	s	RES, ADJ METAL 2K
RV110	1-238-800-11	s	RES, ADJ METAL 2K
RV351	1-238-807-11	s	RES, ADJ METAL 500K
RV352	1-238-801-11	s	RES, ADJ METAL 5K
RV353	1-238-799-11	s	RES, ADJ METAL 1K
RV451	1-238-807-11	s	RES, ADJ METAL 500K
RV452	1-238-801-11	s	RES, ADJ METAL 5K
RV453	1-238-799-11	s	RES, ADJ METAL 1K
RV501	1-238-807-11	s	RES, ADJ METAL 500K
RV502	1-238-801-11	s	RES, ADJ METAL 5K
RV503	1-238-799-11	s	RES, ADJ METAL 1K
RV601	1-238-807-11	s	RES, ADJ METAL 500K
RV602	1-238-801-11	s	RES, ADJ METAL 5K
RV603	1-238-799-11	s	RES, ADJ METAL 1K
RY311	1-515-434-00	s	RELAY, REED
RY361	1-515-434-00	s	RELAY, REED
RY411	1-515-434-00	s	RELAY, REED
RY451	1-515-434-00	s	RELAY, REED
S1	1-553-977-00	s	SWITCH, SLIDE
S2	1-553-977-00	s	SWITCH, SLIDE
S3	1-553-977-00	s	SWITCH, SLIDE
S101	1-553-977-00	s	SWITCH, SLIDE
S102	1-553-977-00	s	SWITCH, SLIDE
S351	1-570-598-11	s	SWITCH, DIP 4-CKT
S451	1-570-598-11	s	SWITCH, DIP 4-CKT
S501	1-570-598-11	s	SWITCH, DIP 4-CKT
S601	1-570-598-11	s	SWITCH, DIP 4-CKT
T1	1-427-545-11	s	TRANSFORMER, RF OUTPUT
T2	1-427-595-11	s	TRANSFORMER, RF
T3	1-427-545-11	s	TRANSFORMER, RF OUTPUT
T4	1-427-595-11	s	TRANSFORMER, RF

(RP-53P BOARD)

Ref. No. or Q'ty	Part No.	SP	Description
T101	1-427-545-11	s	TRANSFORMER, RF OUTPUT
T102	1-427-595-11	s	TRANSFORMER, RF
T103	1-427-545-11	s	TRANSFORMER, RF OUTPUT
T104	1-427-595-11	s	TRANSFORMER, RF
T301	1-433-326-11	s	TRANSFORMER, BIAS OSCILLATION
T401	1-433-326-11	s	TRANSFORMER, BIAS OSCILLATION
TR2	8-729-602-71	s	TRANSISTOR 2SK613-3
TR3	8-729-602-71	s	TRANSISTOR 2SK613-3

SIF-17 BOARD

Ref. No. or Q'ty	Part No.	SP	Description
1pc	A-6727-365-A	o	MOUNTED CIRCUIT BOARD, SIF-17
C300	1-124-584-00	s	ELECT 100uF 20% 10V
C302	1-164-004-11	s	CERAMIC, CHIP 0.1uF 10% 25V
C303	1-126-153-11	s	ELECT 4.7MF 20% 50V
C304	1-164-004-11	s	CERAMIC, CHIP 0.1uF 10% 25V
C305	1-163-095-00	s	CERAMIC, CHIP 12PF 5% 50V
C306	1-163-095-00	s	CERAMIC, CHIP 12PF 5% 50V
C307	1-124-584-00	s	ELECT 100uF 20% 10V
C308	1-164-232-11	s	CERAMIC 0.01uF 10% 100V
C309	1-163-037-11	s	CERAMIC, CHIP 0.022uF 10% 25V
C310	1-126-157-11	s	ELECT 10uF 20% 16V
C311	1-126-160-11	s	ELECT 1uF 20% 50V
C312	1-163-037-11	s	CERAMIC, CHIP 0.022uF 10% 25V
C313	1-163-037-11	s	CERAMIC, CHIP 0.022uF 10% 25V
C314	1-163-037-11	s	CERAMIC, CHIP 0.022uF 10% 25V
C315	1-163-037-11	s	CERAMIC, CHIP 0.022uF 10% 25V
C316	1-163-037-11	s	CERAMIC, CHIP 0.022uF 10% 25V
C317	1-163-037-11	s	CERAMIC, CHIP 0.022uF 10% 25V
C318	1-163-037-11	s	CERAMIC, CHIP 0.022uF 10% 25V
C319	1-163-037-11	s	CERAMIC, CHIP 0.022uF 10% 25V
C320	1-163-037-11	s	CERAMIC, CHIP 0.022uF 10% 25V
C321	1-163-037-11	s	CERAMIC, CHIP 0.022uF 10% 25V
C322	1-163-037-11	s	CERAMIC, CHIP 0.022uF 10% 25V
C323	1-163-037-11	s	CERAMIC, CHIP 0.022uF 10% 25V
C324	1-163-037-11	s	CERAMIC, CHIP 0.022uF 10% 25V
C325	1-163-037-11	s	CERAMIC, CHIP 0.022uF 10% 25V
C326	1-163-037-11	s	CERAMIC, CHIP 0.022uF 10% 25V
C327	1-163-037-11	s	CERAMIC, CHIP 0.022uF 10% 25V
C328	1-163-037-11	s	CERAMIC, CHIP 0.022uF 10% 25V
C329	1-163-037-11	s	CERAMIC, CHIP 0.022uF 10% 25V
C330	1-163-037-11	s	CERAMIC, CHIP 0.022uF 10% 25V
C331	1-163-037-11	s	CERAMIC, CHIP 0.022uF 10% 25V
C332	1-163-037-11	s	CERAMIC, CHIP 0.022uF 10% 25V
C333	1-163-037-11	s	CERAMIC, CHIP 0.022uF 10% 25V
C334	1-163-037-11	s	CERAMIC, CHIP 0.022uF 10% 25V
C335	1-163-037-11	s	CERAMIC, CHIP 0.022uF 10% 25V
C336	1-163-037-11	s	CERAMIC, CHIP 0.022uF 10% 25V
C337	1-163-037-11	s	CERAMIC, CHIP 0.022uF 10% 25V
C338	1-163-037-11	s	CERAMIC, CHIP 0.022uF 10% 25V
C339	1-163-037-11	s	CERAMIC, CHIP 0.022uF 10% 25V
C360	1-126-153-11	s	ELECT 22uF 20% 6.3V
C361	1-163-037-11	s	CERAMIC, CHIP 0.022uF 10% 25V
C362	1-163-009-11	s	CERAMIC, CHIP 0.001uF 10% 50V
C363	1-131-349-00	s	TANTALUM 2.2uF 10% 35V
C364	1-131-349-00	s	TANTALUM 2.2uF 10% 35V
C365	1-163-037-11	s	CERAMIC, CHIP 0.022uF 10% 25V
C366	1-163-097-00	s	CERAMIC, CHIP 15PF 5% 50V
C367	1-163-037-11	s	CERAMIC, CHIP 0.022uF 10% 25V
C370	1-126-153-11	s	ELECT 22uF 20% 6.3V
C371	1-163-037-11	s	CERAMIC, CHIP 0.022uF 10% 25V
C372	1-163-009-11	s	CERAMIC, CHIP 0.001uF 10% 50V
C373	1-131-349-00	s	TANTALUM 2.2uF 10% 35V
C374	1-131-349-00	s	TANTALUM 2.2uF 10% 35V
C375	1-163-037-11	s	CERAMIC, CHIP 0.022uF 10% 25V
C376	1-163-097-00	s	CERAMIC, CHIP 15PF 5% 50V
C377	1-163-037-11	s	CERAMIC, CHIP 0.022uF 10% 25V
C378	1-161-055-00	s	CERAMIC 0.022uF 10% 50V

(SIF-17 BOARD)

Ref. No. or Q'ty	Part No.	SP	Description
CN301	1-559-614-11	o	CABLE, FLAT 40P
CN302	1-559-614-11	o	CABLE, FLAT 40P
CN1005	1-540-069-11	s	SOCKET, IC (IC113) 84P
D301	8-719-920-05	s	DIODE SLP281C-50
D302	8-719-920-05	s	DIODE SLP281C-50
D303	8-719-920-05	s	DIODE SLP281C-50
D304	8-719-920-05	s	DIODE SLP281C-50
D305	8-719-812-31	s	LED TLR123, RED
D306	8-719-812-31	s	LED TLR123, RED
D307	8-719-812-31	s	LED TLR123, RED
D308	8-719-812-31	s	LED TLR123, RED
D309	8-719-104-34	s	DIODE 1S2835
D310	8-719-104-34	s	DIODE 1S2835
FB300	1-535-180-00	s	BEAD, FERRITE
IC29	8-752-306-51	s	IC CX23065A
IC30	8-759-931-43	s	IC SN74LS624NS
IC31	8-752-306-51	s	IC CX23065A
IC32	8-759-931-43	s	IC SN74LS624NS
IC300	8-759-945-98	s	IC CXD1146Q
IC301	8-759-945-98	s	IC CXD1146Q
IC302	8-759-985-17	s	IC 74AC04SJ
IC303	8-759-925-74	s	IC SN74HC04NS
IC304	8-759-519-11	s	IC CXD8280Q
IC305	8-759-926-77	s	IC SN74HC541NS
IC306	8-759-052-99	s	IC TC4044BF
IC307	8-759-052-99	s	IC TC4044BF
IC309	8-759-925-76	s	IC SN74HC08NS
IC310	8-759-323-74	s	IC HD6475328CP10
IC311	8-759-925-85	s	IC SN74HC32NS
IC312	8-759-512-71	s	IC S-8054HNH
IC313	8-759-985-41	s	IC 74AC163SJ
IC314	8-759-985-41	s	IC 74AC163SJ
IC315	8-759-985-41	s	IC 74AC163SJ
IC316	8-759-925-74	s	IC SN74HC04NS
IC319	8-759-985-17	s	IC 74AC04SJ
IC320	8-752-306-51	s	IC CX23065A
IC321	8-759-926-98	s	IC SN74HC4040NS
IC323	8-759-926-28	s	IC SN74HC174NS
IC324	8-759-519-12	s	IC CXD8281Q
IC327	8-759-945-98	s	IC CXD1146Q
IC328	8-759-945-98	s	IC CXD1146Q
IC329	8-759-748-87	s	IC EPM5032DC
L300	1-410-482-31	s	INDUCTOR 100uH
L301	1-410-470-11	s	INDUCTOR 10uH
L302	1-410-470-11	s	INDUCTOR 10uH
R301	1-216-691-11	s	METAL, CHIP 47K 0.5% 1/10W
R302	1-216-691-11	s	METAL, CHIP 47K 0.5% 1/10W
R303	1-216-691-11	s	METAL, CHIP 47K 0.5% 1/10W
R304	1-216-691-11	s	METAL, CHIP 47K 0.5% 1/10W
R305	1-216-691-11	s	METAL, CHIP 47K 0.5% 1/10W
R306	1-216-691-11	s	METAL, CHIP 47K 0.5% 1/10W
R307	1-216-691-11	s	METAL, CHIP 47K 0.5% 1/10W
R308	1-216-691-11	s	METAL, CHIP 47K 0.5% 1/10W
R310	1-216-691-11	s	METAL, CHIP 47K 0.5% 1/10W
R312	1-216-691-11	s	METAL, CHIP 47K 0.5% 1/10W
R313	1-216-691-11	s	METAL, CHIP 47K 0.5% 1/10W

(SIF-17 BOARD)

Ref. No. or Q'ty	Part No.	SP	Description
R314	1-218-699-11	s	METAL, CHIP 100K 0.5% 1/10W
R315	1-216-699-11	s	METAL, CHIP 100K 0.5% 1/10W
R316	1-216-667-11	s	METAL, CHIP 4.7K 0.5% 1/10W
R317	1-216-691-11	s	METAL, CHIP 47K 0.5% 1/10W
R318	1-216-643-11	s	METAL, CHIP 470 0.5% 1/10W
R319	1-216-643-11	s	METAL, CHIP 470 0.5% 1/10W
R320	1-216-643-11	s	METAL, CHIP 470 0.5% 1/10W
R321	1-216-643-11	s	METAL, CHIP 470 0.5% 1/10W
R322	1-216-643-11	s	METAL, CHIP 470 0.5% 1/10W
R323	1-216-643-11	s	METAL, CHIP 470 0.5% 1/10W
R324	1-216-643-11	s	METAL, CHIP 470 0.5% 1/10W
R325	1-216-643-11	s	METAL, CHIP 470 0.5% 1/10W
R341	1-216-295-00	s	METAL, CHIP 0-OHM
R343	1-216-295-00	s	METAL, CHIP 0-OHM
R345	1-216-295-00	s	METAL, CHIP 0-OHM
R355	1-218-295-00	s	METAL, CHIP 0-OHM
R356	1-216-295-00	s	METAL, CHIP 0-OHM
R357	1-216-295-00	s	METAL, CHIP 0-OHM
R360	1-216-655-11	s	METAL, CHIP 1.5K 0.5% 1/10W
R361	1-216-655-11	s	METAL, CHIP 1.5K 0.5% 1/10W
R362	1-216-627-11	s	METAL, CHIP 100 0.5% 1/10W
R370	1-216-655-11	s	METAL, CHIP 1.5K 0.5% 1/10W
R371	1-216-655-11	s	METAL, CHIP 1.5K 0.5% 1/10W
R372	1-216-627-11	s	METAL, CHIP 100 0.5% 1/10W
X301	1-577-110-11	s	CRYSTAL 20MHz
X302	1-577-590-11	s	VCO, CRYSTAL 12.288MHz

SS-48DP BOARD

Ref. No. or Q'ty	Part No.	SP	Description
1pc	A-6717-628-A	o	MOUNTED CIRCUIT BOARD, SS-48DP
1pc	3-171-453-01	o	PLATE (L), SHIELD, CARD
1pc	3-171-454-02	o	SHEET (L), CARD
1pc	7-621-759-45	s	+PSW, 2.6X6
C1	1-163-091-00	s	CERAMIC, CHIP 8PF 50V
C2	1-163-091-00	s	CERAMIC, CHIP 8PF 50V
C3	1-131-347-00	s	TANTALUM 1uF 10% 35V
C4	1-163-037-11	s	CERAMIC, CHIP 0.022uF 10% 25V
C5	1-163-037-11	s	CERAMIC, CHIP 0.022uF 10% 25V
C6	1-163-037-11	s	CERAMIC, CHIP 0.022uF 10% 25V
C7	1-163-037-11	s	CERAMIC, CHIP 0.022uF 10% 25V
C9	1-163-037-11	s	CERAMIC, CHIP 0.022uF 10% 25V
C10	1-163-037-11	s	CERAMIC, CHIP 0.022uF 10% 25V
C11	1-163-037-11	s	CERAMIC, CHIP 0.022uF 10% 25V
C12	1-163-037-11	s	CERAMIC, CHIP 0.022uF 10% 25V
C14	1-163-037-11	s	CERAMIC, CHIP 0.022uF 10% 25V
C15	1-163-037-11	s	CERAMIC, CHIP 0.022uF 10% 25V
C101	1-163-037-11	s	CERAMIC, CHIP 0.022uF 10% 25V
C102	1-163-251-11	s	CERAMIC, CHIP 100PF 5% 50V
C103	1-163-251-11	s	CERAMIC, CHIP 100PF 5% 50V
C104	1-163-110-00	s	CERAMIC, CHIP 51PF 5% 50V
C105	1-163-110-00	s	CERAMIC, CHIP 51PF 5% 50V
C106	1-163-110-00	s	CERAMIC, CHIP 51PF 5% 50V
C107	1-163-110-00	s	CERAMIC, CHIP 51PF 5% 50V
C108	1-163-110-00	s	CERAMIC, CHIP 51PF 5% 50V
C109	1-163-110-00	s	CERAMIC, CHIP 51PF 5% 50V
C116	1-163-037-11	s	CERAMIC, CHIP 0.022uF 10% 25V
C117	1-163-037-11	s	CERAMIC, CHIP 0.022uF 10% 25V
C118	1-163-037-11	s	CERAMIC, CHIP 0.022uF 10% 25V
C119	1-163-037-11	s	CERAMIC, CHIP 0.022uF 10% 25V
C120	1-163-037-11	s	CERAMIC, CHIP 0.022uF 10% 25V
C121	1-163-037-11	s	CERAMIC, CHIP 0.022uF 10% 25V
C126	1-163-037-11	s	CERAMIC, CHIP 0.022uF 10% 25V
C127	1-163-037-11	s	CERAMIC, CHIP 0.022uF 10% 25V
C201	1-163-037-11	s	CERAMIC, CHIP 0.022uF 10% 25V
C202	1-131-347-00	s	TANTALUM 1uF 10% 35V
C203	1-163-133-00	s	CERAMIC, CHIP 470PF 5% 50V
C204	1-163-037-11	s	CERAMIC, CHIP 0.022uF 10% 25V
C205	1-163-251-11	s	CERAMIC, CHIP 100PF 5% 50V
C206	1-163-037-11	s	CERAMIC, CHIP 0.022uF 10% 25V
C208	1-163-037-11	s	CERAMIC, CHIP 0.022uF 10% 25V
C209	1-163-037-11	s	CERAMIC, CHIP 0.022uF 10% 25V
C210	1-163-037-11	s	CERAMIC, CHIP 0.022uF 10% 25V
C211	1-163-037-11	s	CERAMIC, CHIP 0.022uF 10% 25V
C212	1-163-037-11	s	CERAMIC, CHIP 0.022uF 10% 25V
C213	1-163-037-11	s	CERAMIC, CHIP 0.022uF 10% 25V
C214	1-163-037-11	s	CERAMIC, CHIP 0.022uF 10% 25V
C215	1-163-037-11	s	CERAMIC, CHIP 0.022uF 10% 25V
C216	1-163-037-11	s	CERAMIC, CHIP 0.022uF 10% 25V
C301	1-163-037-11	s	CERAMIC, CHIP 0.022uF 10% 25V
C302	1-163-037-11	s	CERAMIC, CHIP 0.022uF 10% 25V
C304	1-163-037-11	s	CERAMIC, CHIP 0.022uF 10% 25V
C401	1-163-037-11	s	CERAMIC, CHIP 0.022uF 10% 25V
C402	1-163-037-11	s	CERAMIC, CHIP 0.022uF 10% 25V
C403	1-163-037-11	s	CERAMIC, CHIP 0.022uF 10% 25V
C404	1-163-037-11	s	CERAMIC, CHIP 0.022uF 10% 25V
C405	1-163-105-00	s	CERAMIC, CHIP 33PF 5% 50V
C406	1-163-105-00	s	CERAMIC, CHIP 33PF 5% 50V
C407	1-131-342-00	s	TANTALUM 0.15uF 10% 35V

(SS-48DP BOARD)

Ref. No. or Q'ty	Part No.	SP	Description
C408	1-163-037-11	s	CERAMIC, CHIP 0.022uF 10% 25V
C409	1-163-133-00	s	CERAMIC, CHIP 470PF 5% 50V
C410	1-163-235-11	s	CERAMIC, CHIP 22PF 5% 50V
C411	1-163-235-11	s	CERAMIC, CHIP 22PF 5% 50V
C412	1-163-037-11	s	CERAMIC, CHIP 0.022uF 10% 25V
C413	1-163-037-11	s	CERAMIC, CHIP 0.022uF 10% 25V
C414	1-124-907-11	s	ELECT 10uF 20% 50V
C415	1-163-037-11	s	CERAMIC, CHIP 0.022uF 10% 25V
C416	1-163-037-11	s	CERAMIC, CHIP 0.022uF 10% 25V
C417	1-163-037-11	s	CERAMIC, CHIP 0.022uF 10% 25V
C418	1-163-037-11	s	CERAMIC, CHIP 0.022uF 10% 25V
C423	1-124-907-11	s	ELECT 10uF 20% 50V
C424	1-124-907-11	s	ELECT 10uF 20% 50V
C425	1-164-232-11	s	CERAMIC 0.01uF 10% 100V
C426	1-163-251-11	s	CERAMIC, CHIP 100PF 5% 50V
C450	1-163-037-11	s	CERAMIC, CHIP 0.022uF 10% 25V
C451	1-164-232-11	s	CERAMIC 0.01uF 10% 100V
C452	1-164-232-11	s	CERAMIC 0.01uF 10% 100V
C453	1-124-907-11	s	ELECT 10uF 20% 50V
C454	1-126-103-11	s	ELECT 470uF 20% 16V
C455	1-163-037-11	s	CERAMIC, CHIP 0.022uF 10% 25V
C456	1-163-113-00	s	CERAMIC, CHIP 68PF 5% 50V
C501	1-163-014-00	s	CERAMIC 0.0027uF 10% 50V
C502	1-131-351-00	s	TANTALUM 4.7uF 10% 35V
C503	1-131-345-00	s	TANTALUM 0.47uF 10% 35V
C504	1-163-037-11	s	CERAMIC, CHIP 0.022uF 10% 25V
C505	1-163-275-11	s	CERAMIC, CHIP 0.001uF 5% 50V
C506	1-130-475-00	s	MYLAR 0.0022uF 5% 50V
C507	1-163-251-11	s	CERAMIC, CHIP 100PF 5% 50V
C508	1-163-237-11	s	CERAMIC, CHIP 27PF 5% 50V
C509	1-163-237-11	s	CERAMIC, CHIP 27PF 5% 50V
C510	1-163-237-11	s	CERAMIC, CHIP 27PF 5% 50V
C511	1-163-237-11	s	CERAMIC, CHIP 27PF 5% 50V
C512	1-163-037-11	s	CERAMIC, CHIP 0.022uF 10% 25V
C515	1-163-037-11	s	CERAMIC, CHIP 0.022uF 10% 25V
C516	1-163-037-11	s	CERAMIC, CHIP 0.022uF 10% 25V
C518	1-163-037-11	s	CERAMIC, CHIP 0.022uF 10% 25V
C519	1-163-037-11	s	CERAMIC, CHIP 0.022uF 10% 25V
C520	1-163-037-11	s	CERAMIC, CHIP 0.022uF 10% 25V
C521	1-163-037-11	s	CERAMIC, CHIP 0.022uF 10% 25V
C522	1-163-037-11	s	CERAMIC, CHIP 0.022uF 10% 25V
C523	1-163-037-11	s	CERAMIC, CHIP 0.022uF 10% 25V
C524	1-163-137-00	s	CERAMIC, CHIP 680PF 5% 50V
C601	1-124-477-11	s	ELECT 47uF 20% 25V
C603	1-163-037-11	s	CERAMIC, CHIP 0.022uF 10% 25V
C604	1-163-037-11	s	CERAMIC, CHIP 0.022uF 10% 25V
C605	1-163-037-11	s	CERAMIC, CHIP 0.022uF 10% 25V
C606	1-163-037-11	s	CERAMIC, CHIP 0.022uF 10% 25V
C607	1-124-477-11	s	ELECT 47uF 20% 25V
C608	1-163-037-11	s	CERAMIC, CHIP 0.022uF 10% 25V
C609	1-124-477-11	s	ELECT 47uF 20% 25V
C610	1-124-477-11	s	ELECT 47uF 20% 25V
C611	1-124-477-11	s	ELECT 47uF 20% 25V
C612	1-124-477-11	s	ELECT 47uF 20% 25V
C613	1-164-232-11	s	CERAMIC 0.01uF 10% 100V
C614	1-163-809-11	s	CERAMIC, CHIP 0.047uF 10% 25V
C616	1-131-347-00	s	TANTALUM 1uF 10% 35V
C617	1-163-809-11	s	CERAMIC, CHIP 0.047uF 10% 25V
C619	1-163-275-11	s	CERAMIC, CHIP 0.001uF 5% 50V

(SS-48DP BOARD)

Ref. No. or Q'ty	Part No.	SP	Description
C620	1-163-275-11	s	CERAMIC, CHIP 0.001uF 5% 50V
C621	1-163-275-11	s	CERAMIC, CHIP 0.001uF 5% 50V
C622	1-163-275-11	s	CERAMIC, CHIP 0.001uF 5% 50V
C623	1-163-275-11	s	CERAMIC, CHIP 0.001uF 5% 50V
C624	1-163-275-11	s	CERAMIC, CHIP 0.001uF 5% 50V
C625	1-163-275-11	s	CERAMIC, CHIP 0.001uF 5% 50V
C626	1-163-275-11	s	CERAMIC, CHIP 0.001uF 5% 50V
C627	1-163-037-11	s	CERAMIC, CHIP 0.022uF 10% 25V
C628	1-163-227-11	s	CERAMIC, CHIP 10PF 5% 50V
C629	1-163-227-11	s	CERAMIC, CHIP 10PF 5% 50V
C630	1-163-037-11	s	CERAMIC, CHIP 0.022uF 10% 25V
C631	1-163-037-11	s	CERAMIC, CHIP 0.022uF 10% 25V
C632	1-163-037-11	s	CERAMIC, CHIP 0.022uF 10% 25V
C633	1-163-037-11	s	CERAMIC, CHIP 0.022uF 10% 25V
C634	1-163-037-11	s	CERAMIC, CHIP 0.022uF 10% 25V
C635	1-163-037-11	s	CERAMIC, CHIP 0.022uF 10% 25V
C636	1-163-037-11	s	CERAMIC, CHIP 0.022uF 10% 25V
C637	1-163-037-11	s	CERAMIC, CHIP 0.022uF 10% 25V
C638	1-163-037-11	s	CERAMIC, CHIP 0.022uF 10% 25V
C639	1-163-037-11	s	CERAMIC, CHIP 0.022uF 10% 25V
C640	1-163-037-11	s	CERAMIC, CHIP 0.022uF 10% 25V
C641	1-163-037-11	s	CERAMIC, CHIP 0.022uF 10% 25V
C642	1-163-037-11	s	CERAMIC, CHIP 0.022uF 10% 25V
C643	1-163-037-11	s	CERAMIC, CHIP 0.022uF 10% 25V
C644	1-163-037-11	s	CERAMIC, CHIP 0.022uF 10% 25V
C645	1-163-275-11	s	CERAMIC, CHIP 0.001uF 5% 50V
C646	1-164-232-11	s	CERAMIC 0.01uF 10% 100V
C647	1-163-037-11	s	CERAMIC, CHIP 0.022uF 10% 25V
C648	1-163-037-11	s	CERAMIC, CHIP 0.022uF 10% 25V
C649	1-163-275-11	s	CERAMIC, CHIP 0.001uF 5% 50V
C650	1-163-037-11	s	CERAMIC, CHIP 0.022uF 10% 25V
C701	1-163-095-00	s	CERAMIC, CHIP 12PF 5% 50V
C702	1-163-095-00	s	CERAMIC, CHIP 12PF 5% 50V
C703	1-163-037-11	s	CERAMIC, CHIP 0.022uF 10% 25V
C704	1-163-037-11	s	CERAMIC, CHIP 0.022uF 10% 25V
C705	1-163-037-11	s	CERAMIC, CHIP 0.022uF 10% 25V
C706	1-163-037-11	s	CERAMIC, CHIP 0.022uF 10% 25V
C707	1-163-037-11	s	CERAMIC, CHIP 0.022uF 10% 25V
C708	1-163-037-11	s	CERAMIC, CHIP 0.022uF 10% 25V
C709	1-163-037-11	s	CERAMIC, CHIP 0.022uF 10% 25V
C710	1-163-275-11	s	CERAMIC, CHIP 0.001uF 5% 50V
C711	1-163-275-11	s	CERAMIC, CHIP 0.001uF 5% 50V
C712	1-163-037-11	s	CERAMIC, CHIP 0.022uF 10% 25V
C713	1-163-095-00	s	CERAMIC, CHIP 12PF 5% 50V
C714	1-163-095-00	s	CERAMIC, CHIP 12PF 5% 50V
C715	1-163-037-11	s	CERAMIC, CHIP 0.022uF 10% 25V
C716	1-163-037-11	s	CERAMIC, CHIP 0.022uF 10% 25V
C718	1-163-037-11	s	CERAMIC, CHIP 0.022uF 10% 25V
C720	1-163-017-00	s	CERAMIC, CHIP 0.0047uF 5% 50V
C801	1-163-037-11	s	CERAMIC, CHIP 0.022uF 10% 25V
C803	1-163-037-11	s	CERAMIC, CHIP 0.022uF 10% 25V
C804	1-163-037-11	s	CERAMIC, CHIP 0.022uF 10% 25V
C805	1-163-037-11	s	CERAMIC, CHIP 0.022uF 10% 25V
C806	1-163-037-11	s	CERAMIC, CHIP 0.022uF 10% 25V
C807	1-163-037-11	s	CERAMIC, CHIP 0.022uF 10% 25V
C810	1-164-232-11	s	CERAMIC 0.01uF 10% 100V
C811	1-163-227-11	s	CERAMIC, CHIP 10PF 5% 50V
C813	1-164-161-11	s	CERAMIC, CHIP 0.0022uF 10% 100V
C814	1-164-161-11	s	CERAMIC, CHIP 0.0022uF 10% 100V

(SS-48DP BOARD)

Ref. No. or Q'ty	Part No.	SP	Description
C815	1-163-037-11	s	CERAMIC, CHIP 0.022uF 10% 25V
C818	1-163-037-11	s	CERAMIC, CHIP 0.022uF 10% 25V
C820	1-124-903-11	s	ELECT 10F 20% 50V
C822	1-163-037-11	s	CERAMIC, CHIP 0.022uF 10% 25V
C824	1-163-037-11	s	CERAMIC, CHIP 0.022uF 10% 25V
C825	1-163-809-11	s	CERAMIC, CHIP 0.047uF 10% 25V
C826	1-163-037-11	s	CERAMIC, CHIP 0.022uF 10% 25V
CN1	1-506-484-11	s	CONNECTOR, 5P, MALE
CN139	1-573-600-21	s	CONNECTOR, PHEC 100P, MALE
CN140	1-573-600-21	s	CONNECTOR, PHEC 100P, MALE
CN141	1-573-600-21	s	CONNECTOR, PHEC 100P, MALE
CN11	1-540-069-11	s	SOCKET, IC (IC113) 84P
CN17	1-526-680-21	s	SOCKET, IC 32P
CN1403	1-526-650-11	o	SOCKET, IC 64P
CN1604	1-540-069-11	s	SOCKET, IC (IC113) 84P
CN1607	1-526-680-21	s	SOCKET, IC 32P
COP1	1-565-413-11	o	PLUG, SHORTING
COP2	1-565-413-11	o	PLUG, SHORTING
COP3	1-565-413-11	o	PLUG, SHORTING
COP4	1-565-413-11	o	PLUG, SHORTING
COR1	1-691-246-11	o	CONNECTOR 12P, MALE
CV401	1-141-390-11	s	CAP, TRIMMER 90PF
CV402	1-141-245-00	s	CAP, TRIMMER 30PF
D101	8-719-941-23	s	DIODE DA204U
D102	8-719-941-23	s	DIODE DA204U
D201	8-719-123-82	s	DIODE 1SS303-T1
D202	8-719-123-82	s	DIODE 1SS303-T1
D301	8-719-800-60	s	LED TLR214, RED
D401	8-719-941-23	s	DIODE DA204U
D402	8-719-941-23	s	DIODE DA204U
D403	8-719-941-23	s	DIODE DA204U
D404	8-719-941-23	s	DIODE DA204U
D405	8-719-941-23	s	DIODE DA204U
D406	8-719-941-23	s	DIODE DA204U
D601	8-719-941-23	s	DIODE DA204U
D602	8-719-941-23	s	DIODE DA204U
D603	8-719-941-23	s	DIODE DA204U
D604	8-719-941-23	s	DIODE DA204U
D605	8-719-941-23	s	DIODE DA204U
D606	8-719-941-23	s	DIODE DA204U
D607	8-719-941-23	s	DIODE DA204U
D608	8-719-941-23	s	DIODE DA204U
D609	8-719-941-23	s	DIODE DA204U
D610	8-719-941-23	s	DIODE DA204U
D611	8-719-941-23	s	DIODE DA204U
D612	8-719-941-23	s	DIODE DA204U
D613	8-719-941-23	s	DIODE DA204U
D614	8-719-941-23	s	DIODE DA204U
D615	8-719-941-23	s	DIODE DA204U
D616	8-719-123-82	s	DIODE 1SS303-T1
D618	8-719-800-60	s	LED TLR214, RED
D619	8-719-800-60	s	LED TLR214, RED
D620	8-719-800-60	s	LED TLR214, RED
D701	8-719-938-72	s	DIODE SB01-05CP
D702	8-719-941-23	s	DIODE DA204U
D703	8-719-941-23	s	DIODE DA204U
D801	8-719-941-23	s	DIODE DA204U

(SS-48DP BOARD)

Ref. No. or Q'ty	Part No.	SP	Description
IC1	8-759-143-98	s	IC UPD70320L-8
IC2	8-759-928-77	s	IC SN74HC541NS
IC3	8-759-925-74	s	IC SN74HC04NS
IC4	8-759-603-32	s	IC M51956BL
IC5	8-759-043-34	s	IC CXD8310M
IC6	8-752-337-78	s	IC CXK58257M-10L
IC7	8-759-514-41	s	IC AM27C010-150DC
IC8	8-759-925-90	s	IC SN74HC74NS
IC10	8-759-925-85	s	IC SN74HC32NS
IC11	8-759-925-76	s	IC SN74HC08NS
IC15	8-759-925-80	s	IC SN74HC14NS
IC101	8-759-109-04	s	IC UPD7201AC
IC102	8-759-009-10	s	IC MC14069UBF
IC103	8-759-926-17	s	IC SN74HC153NS
IC104	8-759-925-85	s	IC SN74HC32NS
IC105	8-759-926-30	s	IC AM26LS30PC
IC106	8-759-926-32	s	IC AM26LS32PC
IC107	8-759-926-30	s	IC AM26LS30PC
IC201	8-759-938-68	s	IC CXD1095Q
IC202	8-759-500-61	s	IC M54529AP
IC203	8-759-009-11	s	IC MC14070BF
IC204	8-759-925-76	s	IC SN74HC08NS
IC205	8-759-009-51	s	IC MC14538BF
IC206	8-759-600-61	s	IC M54529AP
IC207	8-759-600-61	s	IC M54529AP
IC208	8-759-600-61	s	IC M54529AP
IC301	8-759-154-71	s	IC CXD8176Q
IC302	8-759-938-68	s	IC CXD1095Q
IC303	8-752-323-63	s	IC CXK5816M-10L
IC401	8-759-154-71	s	IC CXD8176Q
IC402	8-759-043-35	s	IC CXD8311Q
IC403	8-759-239-51	s	IC TMP91P640N
IC404	8-759-009-51	s	IC MC14538BF
IC405	8-759-500-93	s	IC MB90051-111
IC406	8-752-323-63	s	IC CXK5816M-10L
IC407	8-759-926-77	s	IC SN74HC541NS
IC408	8-759-982-21	s	IC RC78L05A
IC409	8-759-239-23	s	IC TC74HC86AF
IC410	8-759-981-92	s	IC RC4558M
IC411	8-759-908-17	s	IC TL082CPS
IC412	8-759-981-86	s	IC RC4556MA
IC413	8-759-981-65	s	IC LM2903M
IC414	8-759-927-46	s	IC SN74HC00NS
IC501	8-759-944-79	s	IC CXD1132Q
IC502	8-759-925-75	s	IC SN74HC08NS
IC504	8-759-925-85	s	IC SN74HC32NS
IC505	8-759-009-51	s	IC MC14538BF
IC506	8-759-300-71	s	IC HD14053BFP
IC507	8-759-009-02	s	IC MC14046BF
IC508	8-759-925-76	s	IC SN74HC08NS
IC510	8-759-926-18	s	IC SN74HC157NS
IC511	8-759-938-68	s	IC CXD1095Q
IC514	8-759-927-29	s	IC SN74HCU04NS
IC601	8-759-100-94	s	IC UPC358G2
IC602	8-759-009-05	s	IC MC14051BF
IC603	8-759-100-94	s	IC UPC358G2
IC604	8-759-323-74	s	IC KM6475328CP10
IC605	8-759-925-76	s	IC SN74HC08NS

(SS-48DP BOARD)

Ref. No. or Q'ty	Part No.	SP	Description
IC606	8-759-925-85	S	IC SN74NC32NS
IC607	8-759-514-41	S	IC AM27C010-150DC
IC608	8-759-926-11	S	IC SN74HC138NS
IC609	8-759-926-11	S	IC SN74HC138NS
IC610	8-759-925-79	S	IC SN74HC11ANS
IC611	8-759-925-83	S	IC SN74HC27ANS
IC612	8-752-323-63	S	IC CXK5816M-10L
IC613	8-759-925-74	S	IC SN74HC04NS
IC615	8-759-936-68	S	IC CXD1095Q
IC616	8-759-300-71	S	IC MD14053BFP
IC617	8-759-926-77	S	IC SN74HC541NS
IC618	8-759-926-77	S	IC SN74HC541NS
IC619	8-759-926-77	S	IC SN74HC541NS
IC620	8-759-926-49	S	IC SN74HC245NS
IC621	8-759-300-71	S	IC MD14053BFP
IC622	8-759-009-51	S	IC MC14538BF
IC701	8-752-340-03	S	IC CXD2202Q
IC702	8-759-300-71	S	IC MD14053BFP
IC703	8-759-239-23	S	IC TC74HC86AF
IC704	8-759-981-65	S	IC LM2903M
IC706	8-759-154-71	S	IC CXD8176Q
IC707	8-752-323-63	S	IC CXK5816M-10L
IC709	8-759-925-76	S	IC SN74HC08NS
IC710	8-752-631-22	S	IC CXP80P116Q-1-024
IC711	8-759-100-95	S	IC UPC3246Z
IC801	8-759-100-95	S	IC UPC3246Z
IC802	8-759-141-05	S	IC UPC4574G2
IC803	8-759-008-67	S	IC MC14066BF
IC804	8-759-908-17	S	IC TL082CPS
IC805	8-759-710-28	S	IC NJM4565M-A
IC806	8-759-009-51	S	IC MC14538BF
IC807	8-759-938-68	S	IC CXD1095Q
IC808	8-759-908-17	S	IC TL082CPS
IC809	8-759-925-90	S	IC SN74HC74NS
IC810	8-759-981-65	S	IC LM2903M
L401	1-410-464-11	S	INDUCTOR 3.3uH
L602	1-412-533-11	S	INDUCTOR 47uH
L603	1-412-533-11	S	INDUCTOR 47uH
Q401	8-729-905-12	S	TRANSISTOR DTA144EU
Q402	8-729-117-32	S	TRANSISTOR 2SC4177
Q404	8-729-905-12	S	TRANSISTOR DTA144EU
Q405	8-729-209-07	S	TRANSISTOR 2SC4213-B
Q406	8-729-117-72	S	TRANSISTOR 2SC4178
Q407	8-729-117-72	S	TRANSISTOR 2SC4178
Q408	8-729-209-07	S	TRANSISTOR 2SC4213-B
Q409	8-729-209-07	S	TRANSISTOR 2SC4213-B
Q410	8-729-905-18	S	TRANSISTOR DTC144EU
Q411	8-729-109-44	S	TRANSISTOR 2SK94
Q412	8-729-117-32	S	TRANSISTOR 2SC4177
Q601	8-729-905-18	S	TRANSISTOR DTC144EU
Q602	8-729-905-18	S	TRANSISTOR DTC144EU
Q603	8-729-905-18	S	TRANSISTOR DTC144EU
Q604	8-729-106-68	S	TRANSISTOR 2SC1615A-GP
Q605	8-729-106-60	S	TRANSISTOR 2SB1115A
Q606	8-729-117-72	S	TRANSISTOR 2SC4178
Q701	8-729-905-18	S	TRANSISTOR DTC144EU
Q702	8-729-905-18	S	TRANSISTOR DTC144EU
Q703	8-729-117-32	S	TRANSISTOR 2SC4177

(SS-48DP BOARD)

Ref. No. or Q'ty	Part No.	SP	Description
Q704	8-729-117-32	S	TRANSISTOR 2SC4177
Q705	8-729-117-32	S	TRANSISTOR 2SC4177
Q706	8-729-117-32	S	TRANSISTOR 2SC4177
Q707	8-729-117-32	S	TRANSISTOR 2SC4177
Q708	8-729-905-18	S	TRANSISTOR DTC144EU
Q709	8-729-905-18	S	TRANSISTOR DTC144EU
Q710	8-729-905-18	S	TRANSISTOR DTC144EU
Q711	8-729-905-18	S	TRANSISTOR DTC144EU
Q801	8-729-905-18	S	TRANSISTOR DTC144EU
Q802	8-729-209-07	S	TRANSISTOR 2SC4213-B
Q803	8-729-209-07	S	TRANSISTOR 2SC4213-B
Q805	8-729-905-18	S	TRANSISTOR DTC144EU
R1	1-216-089-00	S	METAL, CHIP 47K 5% 1/10W
R2	1-216-089-00	S	METAL, CHIP 47K 5% 1/10W
R3	1-216-089-00	S	METAL, CHIP 47K 5% 1/10W
R4	1-216-089-00	S	METAL, CHIP 47K 5% 1/10W
R5	1-216-089-00	S	METAL, CHIP 47K 5% 1/10W
R6	1-216-089-00	S	METAL, CHIP 47K 5% 1/10W
R7	1-216-089-00	S	METAL, CHIP 47K 5% 1/10W
R8	1-216-089-00	S	METAL, CHIP 47K 5% 1/10W
R9	1-216-089-00	S	METAL, CHIP 47K 5% 1/10W
R10	1-216-089-00	S	METAL, CHIP 47K 5% 1/10W
R11	1-216-073-00	S	METAL, CHIP 10K 5% 1/10W
R12	1-216-073-00	S	METAL, CHIP 10K 5% 1/10W
R13	1-216-073-00	S	METAL, CHIP 10K 5% 1/10W
R14	1-216-073-00	S	METAL, CHIP 10K 5% 1/10W
R15	1-216-073-00	S	METAL, CHIP 10K 5% 1/10W
R16	1-216-073-00	S	METAL, CHIP 10K 5% 1/10W
R17	1-216-089-00	S	METAL, CHIP 47K 5% 1/10W
R18	1-216-089-00	S	METAL, CHIP 47K 5% 1/10W
R19	1-216-089-00	S	METAL, CHIP 47K 5% 1/10W
R20	1-216-089-00	S	METAL, CHIP 47K 5% 1/10W
R21	1-216-089-00	S	METAL, CHIP 47K 5% 1/10W
R22	1-216-089-00	S	METAL, CHIP 47K 5% 1/10W
R23	1-216-089-00	S	METAL, CHIP 47K 5% 1/10W
R24	1-216-089-00	S	METAL, CHIP 47K 5% 1/10W
R25	1-216-089-00	S	METAL, CHIP 47K 5% 1/10W
R26	1-216-089-00	S	METAL, CHIP 47K 5% 1/10W
R27	1-216-089-00	S	METAL, CHIP 47K 5% 1/10W
R28	1-216-089-00	S	METAL, CHIP 47K 5% 1/10W
R29	1-216-680-11	S	METAL, CHIP 16K 0.5% 1/10W
R30	1-216-689-11	S	METAL, CHIP 39K 0.5% 1/10W
R31	1-216-057-00	S	METAL, CHIP 2.2K 5% 1/10W
R32	1-216-057-00	S	METAL, CHIP 2.2K 5% 1/10W
R33	1-216-057-00	S	METAL, CHIP 2.2K 5% 1/10W
R34	1-216-057-00	S	METAL, CHIP 2.2K 5% 1/10W
R35	1-216-057-00	S	METAL, CHIP 2.2K 5% 1/10W
R36	1-216-057-00	S	METAL, CHIP 2.2K 5% 1/10W
R37	1-216-057-00	S	METAL, CHIP 2.2K 5% 1/10W
R38	1-216-057-00	S	METAL, CHIP 2.2K 5% 1/10W
R39	1-216-057-00	S	METAL, CHIP 2.2K 5% 1/10W
R40	1-216-057-00	S	METAL, CHIP 2.2K 5% 1/10W
R41	1-216-057-00	S	METAL, CHIP 2.2K 5% 1/10W
R42	1-216-057-00	S	METAL, CHIP 2.2K 5% 1/10W
R43	1-216-057-00	S	METAL, CHIP 2.2K 5% 1/10W
R44	1-216-057-00	S	METAL, CHIP 2.2K 5% 1/10W
R45	1-216-057-00	S	METAL, CHIP 2.2K 5% 1/10W
R46	1-216-057-00	S	METAL, CHIP 2.2K 5% 1/10W

(SS-48DP BOARD)

Ref. No. or Q'ty	Part No.	SP	Description
R47	1-216-057-00	s	METAL, CHIP 2.2K 5% 1/10W
R48	1-216-057-00	s	METAL, CHIP 2.2K 5% 1/10W
R49	1-216-057-00	s	METAL, CHIP 2.2K 5% 1/10W
R50	1-216-057-00	s	METAL, CHIP 2.2K 5% 1/10W
R51	1-216-057-00	s	METAL, CHIP 2.2K 5% 1/10W
R52	1-216-057-00	s	METAL, CHIP 2.2K 5% 1/10W
R53	1-216-057-00	s	METAL, CHIP 2.2K 5% 1/10W
R54	1-216-057-00	s	METAL, CHIP 2.2K 5% 1/10W
R55	1-216-057-00	s	METAL, CHIP 2.2K 5% 1/10W
R56	1-216-057-00	s	METAL, CHIP 2.2K 5% 1/10W
R57	1-216-057-00	s	METAL, CHIP 2.2K 5% 1/10W
R58	1-216-057-00	s	METAL, CHIP 2.2K 5% 1/10W
R59	1-216-089-00	s	METAL, CHIP 47K 5% 1/10W
R80	1-216-089-00	s	METAL, CHIP 47K 5% 1/10W
R81	1-216-089-00	s	METAL, CHIP 47K 5% 1/10W
R82	1-216-089-00	s	METAL, CHIP 47K 5% 1/10W
R83	1-216-089-00	s	METAL, CHIP 47K 5% 1/10W
R84	1-216-089-00	s	METAL, CHIP 47K 5% 1/10W
R85	1-216-049-00	s	METAL, CHIP 1K 5% 1/10W
R67	1-218-089-00	s	METAL, CHIP 47K 5% 1/10W
R68	1-218-089-00	s	METAL, CHIP 47K 5% 1/10W
R69	1-216-089-00	s	METAL, CHIP 47K 5% 1/10W
R70	1-216-073-00	s	METAL, CHIP 10K 5% 1/10W
R71	1-216-025-00	s	METAL, CHIP 100 5% 1/10W
R72	1-216-025-00	s	METAL, CHIP 100 5% 1/10W
R73	1-216-089-00	s	METAL, CHIP 47K 5% 1/10W
R74	1-216-089-00	s	METAL, CHIP 47K 5% 1/10W
R75	1-216-089-00	s	METAL, CHIP 47K 5% 1/10W
R101	1-216-073-00	s	METAL, CHIP 10K 5% 1/10W
R102	1-216-073-00	s	METAL, CHIP 10K 5% 1/10W
R103	1-216-121-00	s	METAL, CHIP 1M 5% 1/10W
R104	1-216-057-00	s	METAL, CHIP 2.2K 5% 1/10W
R105	1-216-057-00	s	METAL, CHIP 2.2K 5% 1/10W
R106	1-216-025-00	s	METAL, CHIP 100 5% 1/10W
R107	1-216-073-00	s	METAL, CHIP 10K 5% 1/10W
R108	1-216-073-00	s	METAL, CHIP 10K 5% 1/10W
R109	1-216-073-00	s	METAL, CHIP 10K 5% 1/10W
R111	1-216-089-00	s	METAL, CHIP 47K 5% 1/10W
R112	1-216-073-00	s	METAL, CHIP 10K 5% 1/10W
R113	1-216-073-00	s	METAL, CHIP 10K 5% 1/10W
R114	1-216-089-00	s	METAL, CHIP 47K 5% 1/10W
R115	1-216-025-00	s	METAL, CHIP 100 5% 1/10W
R116	1-216-025-00	s	METAL, CHIP 100 5% 1/10W
R117	1-216-097-00	s	METAL, CHIP 100K 5% 1/10W
R118	1-216-077-00	s	METAL, CHIP 15K 5% 1/10W
R119	1-216-097-00	s	METAL, CHIP 100K 5% 1/10W
R120	1-216-077-00	s	METAL, CHIP 15K 5% 1/10W
R121	1-216-097-00	s	METAL, CHIP 100K 5% 1/10W
R122	1-216-077-00	s	METAL, CHIP 15K 5% 1/10W
R123	1-216-097-00	s	METAL, CHIP 100K 5% 1/10W
R124	1-216-077-00	s	METAL, CHIP 15K 5% 1/10W
R125	1-216-073-00	s	METAL, CHIP 10K 5% 1/10W
R201	1-216-057-00	s	METAL, CHIP 2.2K 5% 1/10W
R202	1-218-057-00	s	METAL, CHIP 2.2K 5% 1/10W
R203	1-216-057-00	s	METAL, CHIP 2.2K 5% 1/10W
R204	1-216-057-00	s	METAL, CHIP 2.2K 5% 1/10W
R205	1-216-057-00	s	METAL, CHIP 2.2K 5% 1/10W
R206	1-216-057-00	s	METAL, CHIP 2.2K 5% 1/10W
R207	1-218-057-00	s	METAL, CHIP 2.2K 5% 1/10W

(SS-48DP BOARD)

Ref. No. or Q'ty	Part No.	SP	Description
R208	1-216-057-00	s	METAL, CHIP 2.2K 5% 1/10W
R209	1-216-073-00	s	METAL, CHIP 10K 5% 1/10W
R210	1-216-073-00	s	METAL, CHIP 10K 5% 1/10W
R211	1-216-073-00	s	METAL, CHIP 10K 5% 1/10W
R212	1-216-073-00	s	METAL, CHIP 10K 5% 1/10W
R213	1-216-073-00	s	METAL, CHIP 10K 5% 1/10W
R214	1-216-073-00	s	METAL, CHIP 10K 5% 1/10W
R215	1-216-113-00	s	METAL, CHIP 470K 5% 1/10W
R216	1-216-049-00	s	METAL, CHIP 1K 5% 1/10W
R217	1-216-073-00	s	METAL, CHIP 10K 5% 1/10W
R218	1-216-097-00	s	METAL, CHIP 100K 5% 1/10W
R219	1-216-073-00	s	METAL, CHIP 10K 5% 1/10W
R220	1-216-097-00	s	METAL, CHIP 100K 5% 1/10W
R221	1-216-057-00	s	METAL, CHIP 2.2K 5% 1/10W
R222	1-216-057-00	s	METAL, CHIP 2.2K 5% 1/10W
R223	1-216-057-00	s	METAL, CHIP 2.2K 5% 1/10W
R224	1-216-057-00	s	METAL, CHIP 2.2K 5% 1/10W
R225	1-216-057-00	s	METAL, CHIP 2.2K 5% 1/10W
R226	1-216-057-00	s	METAL, CHIP 2.2K 5% 1/10W
R227	1-216-057-00	s	METAL, CHIP 2.2K 5% 1/10W
R228	1-216-057-00	s	METAL, CHIP 2.2K 5% 1/10W
R229	1-216-073-00	s	METAL, CHIP 10K 5% 1/10W
R230	1-216-073-00	s	METAL, CHIP 10K 5% 1/10W
R231	1-216-073-00	s	METAL, CHIP 10K 5% 1/10W
R232	1-216-049-00	s	METAL, CHIP 1K 5% 1/10W
R233	1-216-113-00	s	METAL, CHIP 470K 5% 1/10W
R234	1-216-073-00	s	METAL, CHIP 10K 5% 1/10W
R235	1-216-073-00	s	METAL, CHIP 10K 5% 1/10W
R236	1-216-073-00	s	METAL, CHIP 10K 5% 1/10W
R237	1-216-073-00	s	METAL, CHIP 10K 5% 1/10W
R238	1-216-057-00	s	METAL, CHIP 2.2K 5% 1/10W
R239	1-216-057-00	s	METAL, CHIP 2.2K 5% 1/10W
R240	1-216-057-00	s	METAL, CHIP 2.2K 5% 1/10W
R241	1-216-057-00	s	METAL, CHIP 2.2K 5% 1/10W
R242	1-216-073-00	s	METAL, CHIP 10K 5% 1/10W
R243	1-216-073-00	s	METAL, CHIP 10K 5% 1/10W
R244	1-216-073-00	s	METAL, CHIP 10K 5% 1/10W
R245	1-216-073-00	s	METAL, CHIP 10K 5% 1/10W
R246	1-216-057-00	s	METAL, CHIP 2.2K 5% 1/10W
R247	1-216-057-00	s	METAL, CHIP 2.2K 5% 1/10W
R248	1-216-057-00	s	METAL, CHIP 2.2K 5% 1/10W
R249	1-216-057-00	s	METAL, CHIP 2.2K 5% 1/10W
R250	1-216-057-00	s	METAL, CHIP 2.2K 5% 1/10W
R251	1-216-057-00	s	METAL, CHIP 2.2K 5% 1/10W
R252	1-216-057-00	s	METAL, CHIP 2.2K 5% 1/10W
R253	1-216-057-00	s	METAL, CHIP 2.2K 5% 1/10W
R254	1-216-089-00	s	METAL, CHIP 47K 5% 1/10W
R255	1-216-057-00	s	METAL, CHIP 2.2K 5% 1/10W
R256	1-218-057-00	s	METAL, CHIP 2.2K 5% 1/10W
R257	1-216-057-00	s	METAL, CHIP 2.2K 5% 1/10W
R258	1-216-057-00	s	METAL, CHIP 2.2K 5% 1/10W
R259	1-218-057-00	s	METAL, CHIP 2.2K 5% 1/10W
R260	1-216-057-00	s	METAL, CHIP 2.2K 5% 1/10W
R261	1-216-089-00	s	METAL, CHIP 47K 5% 1/10W
R262	1-216-089-00	s	METAL, CHIP 47K 5% 1/10W
R263	1-216-073-00	s	METAL, CHIP 10K 5% 1/10W
R264	1-218-073-00	s	METAL, CHIP 10K 5% 1/10W
R301	1-216-073-00	s	METAL, CHIP 10K 5% 1/10W
R302	1-216-089-00	s	METAL, CHIP 47K 5% 1/10W

(SS-48DP BOARD)

Ref. No. or Q'ty	Part No.	SP	Description
R303	1-216-089-00	s	METAL, CHIP 47K 5% 1/10W
R304	1-216-089-00	s	METAL, CHIP 47K 5% 1/10W
R305	1-216-089-00	s	METAL, CHIP 47K 5% 1/10W
R306	1-216-089-00	s	METAL, CHIP 47K 5% 1/10W
R307	1-216-089-00	s	METAL, CHIP 47K 5% 1/10W
R308	1-216-089-00	s	METAL, CHIP 47K 5% 1/10W
R309	1-216-089-00	s	METAL, CHIP 47K 5% 1/10W
R310	1-216-089-00	s	METAL, CHIP 47K 5% 1/10W
R311	1-216-089-00	s	METAL, CHIP 47K 5% 1/10W
R312	1-216-089-00	s	METAL, CHIP 47K 5% 1/10W
R313	1-216-089-00	s	METAL, CHIP 47K 5% 1/10W
R314	1-216-089-00	s	METAL, CHIP 47K 5% 1/10W
R315	1-216-065-00	s	METAL, CHIP 4.7K 5% 1/10W
R316	1-216-065-00	s	METAL, CHIP 4.7K 5% 1/10W
R317	1-216-049-00	s	METAL, CHIP 1K 5% 1/10W
R318	1-216-049-00	s	METAL, CHIP 1K 5% 1/10W
R319	1-216-065-00	s	METAL, CHIP 4.7K 5% 1/10W
R320	1-216-065-00	s	METAL, CHIP 4.7K 5% 1/10W
R321	1-216-065-00	s	METAL, CHIP 4.7K 5% 1/10W
R322	1-216-037-00	s	METAL, CHIP 330 5% 1/10W
R325	1-216-089-00	s	METAL, CHIP 47K 5% 1/10W
R330	1-216-049-00	s	METAL, CHIP 1K 5% 1/10W
R333	1-216-049-00	s	METAL, CHIP 1K 5% 1/10W
R334	1-216-049-00	s	METAL, CHIP 1K 5% 1/10W
R335	1-216-049-00	s	METAL, CHIP 1K 5% 1/10W
R336	1-216-049-00	s	METAL, CHIP 1K 5% 1/10W
R337	1-216-049-00	s	METAL, CHIP 1K 5% 1/10W
R338	1-216-049-00	s	METAL, CHIP 1K 5% 1/10W
R339	1-216-049-00	s	METAL, CHIP 1K 5% 1/10W
R340	1-216-049-00	s	METAL, CHIP 1K 5% 1/10W
R341	1-216-049-00	s	METAL, CHIP 1K 5% 1/10W
R342	1-216-049-00	s	METAL, CHIP 1K 5% 1/10W
R343	1-216-049-00	s	METAL, CHIP 1K 5% 1/10W
R401	1-216-073-00	s	METAL, CHIP 10K 5% 1/10W
R402	1-216-057-00	s	METAL, CHIP 2.2K 5% 1/10W
R403	1-216-057-00	s	METAL, CHIP 2.2K 5% 1/10W
R404	1-216-057-00	s	METAL, CHIP 2.2K 5% 1/10W
R405	1-216-057-00	s	METAL, CHIP 2.2K 5% 1/10W
R406	1-216-057-00	s	METAL, CHIP 2.2K 5% 1/10W
R407	1-216-057-00	s	METAL, CHIP 2.2K 5% 1/10W
R408	1-216-057-00	s	METAL, CHIP 2.2K 5% 1/10W
R409	1-216-057-00	s	METAL, CHIP 2.2K 5% 1/10W
R410	1-216-057-00	s	METAL, CHIP 2.2K 5% 1/10W
R411	1-216-057-00	s	METAL, CHIP 2.2K 5% 1/10W
R412	1-216-057-00	s	METAL, CHIP 2.2K 5% 1/10W
R413	1-216-057-00	s	METAL, CHIP 2.2K 5% 1/10W
R414	1-216-057-00	s	METAL, CHIP 2.2K 5% 1/10W
R415	1-216-057-00	s	METAL, CHIP 2.2K 5% 1/10W
R416	1-216-057-00	s	METAL, CHIP 2.2K 5% 1/10W
R417	1-216-057-00	s	METAL, CHIP 2.2K 5% 1/10W
R418	1-216-057-00	s	METAL, CHIP 2.2K 5% 1/10W
R419	1-216-057-00	s	METAL, CHIP 2.2K 5% 1/10W
R420	1-216-057-00	s	METAL, CHIP 2.2K 5% 1/10W
R421	1-216-057-00	s	METAL, CHIP 2.2K 5% 1/10W
R422	1-216-057-00	s	METAL, CHIP 2.2K 5% 1/10W
R423	1-216-057-00	s	METAL, CHIP 2.2K 5% 1/10W
R424	1-216-057-00	s	METAL, CHIP 2.2K 5% 1/10W
R425	1-216-057-00	s	METAL, CHIP 2.2K 5% 1/10W
R426	1-216-089-00	s	METAL, CHIP 47K 5% 1/10W

(SS-48DP BOARD)

Ref. No. or Q'ty	Part No.	SP	Description
R427	1-216-073-00	s	METAL, CHIP 10K 5% 1/10W
R428	1-216-097-00	s	METAL, CHIP 100K 5% 1/10W
R429	1-216-053-00	s	METAL, CHIP 1.5K 5% 1/10W
R430	1-216-073-00	s	METAL, CHIP 10K 5% 1/10W
R431	1-216-089-00	s	METAL, CHIP 47K 5% 1/10W
R432	1-216-073-00	s	METAL, CHIP 10K 5% 1/10W
R433	1-216-073-00	s	METAL, CHIP 10K 5% 1/10W
R434	1-216-109-00	s	METAL, CHIP 330K 5% 1/10W
R435	1-216-624-11	s	METAL, CHIP 75 0.5% 1/10W
R436	1-216-073-00	s	METAL, CHIP 10K 5% 1/10W
R437	1-216-073-00	s	METAL, CHIP 10K 5% 1/10W
R438	1-216-073-00	s	METAL, CHIP 10K 5% 1/10W
R441	1-216-097-00	s	METAL, CHIP 100K 5% 1/10W
R442	1-216-097-00	s	METAL, CHIP 100K 5% 1/10W
R443	1-216-049-00	s	METAL, CHIP 1K 5% 1/10W
R444	1-216-049-00	s	METAL, CHIP 1K 5% 1/10W
R445	1-216-089-00	s	METAL, CHIP 47K 5% 1/10W
R446	1-216-089-00	s	METAL, CHIP 47K 5% 1/10W
R447	1-216-663-11	s	METAL, CHIP 3.3K 0.5% 1/10W
R448	1-216-648-11	s	METAL, CHIP 750 0.5% 1/10W
R450	1-216-659-11	s	METAL, CHIP 2.2K 0.5% 1/10W
R451	1-216-659-11	s	METAL, CHIP 2.2K 0.5% 1/10W
R452	1-216-699-11	s	METAL, CHIP 100K 0.5% 1/10W
R453	1-216-699-11	s	METAL, CHIP 100K 0.5% 1/10W
R454	1-216-065-00	s	METAL, CHIP 4.7K 5% 1/10W
R456	1-216-691-11	s	METAL, CHIP 47K 0.5% 1/10W
R457	1-216-691-11	s	METAL, CHIP 47K 0.5% 1/10W
R459	1-216-089-00	s	METAL, CHIP 47K 5% 1/10W
R460	1-216-089-00	s	METAL, CHIP 47K 5% 1/10W
R461	1-216-073-00	s	METAL, CHIP 10K 5% 1/10W
R462	1-216-073-00	s	METAL, CHIP 10K 5% 1/10W
R463	1-216-073-00	s	METAL, CHIP 10K 5% 1/10W
R464	1-216-073-00	s	METAL, CHIP 10K 5% 1/10W
R465	1-216-073-00	s	METAL, CHIP 10K 5% 1/10W
R466	1-216-073-00	s	METAL, CHIP 10K 5% 1/10W
R467	1-216-073-00	s	METAL, CHIP 10K 5% 1/10W
R468	1-216-073-00	s	METAL, CHIP 10K 5% 1/10W
R469	1-216-073-00	s	METAL, CHIP 10K 5% 1/10W
R470	1-216-073-00	s	METAL, CHIP 10K 5% 1/10W
R471	1-216-073-00	s	METAL, CHIP 10K 5% 1/10W
R472	1-216-073-00	s	METAL, CHIP 10K 5% 1/10W
R473	1-216-073-00	s	METAL, CHIP 10K 5% 1/10W
R474	1-216-025-00	s	METAL, CHIP 100 5% 1/10W
R475	1-216-073-00	s	METAL, CHIP 10K 5% 1/10W
R476	1-216-049-00	s	METAL, CHIP 1K 5% 1/10W
R477	1-216-073-00	s	METAL, CHIP 10K 5% 1/10W
R478	1-216-033-00	s	METAL, CHIP 220 5% 1/10W
R479	1-216-053-00	s	METAL, CHIP 1.5K 5% 1/10W
R480	1-216-061-00	s	METAL, CHIP 3.3K 5% 1/10W
R481	1-216-073-00	s	METAL, CHIP 10K 5% 1/10W
R482	1-216-081-00	s	METAL, CHIP 22K 5% 1/10W
R483	1-216-081-00	s	METAL, CHIP 22K 5% 1/10W
R484	1-216-073-00	s	METAL, CHIP 10K 5% 1/10W
R485	1-216-121-00	s	METAL, CHIP 1M 5% 1/10W
R486	1-216-067-00	s	METAL, CHIP 5.6K 5% 1/10W
R487	1-216-065-00	s	METAL, CHIP 4.7K 5% 1/10W
R488	1-216-113-00	s	METAL, CHIP 470K 5% 1/10W
R489	1-216-067-00	s	METAL, CHIP 5.6K 5% 1/10W
R490	1-216-065-00	s	METAL, CHIP 4.7K 5% 1/10W

(SS-48DP BOARD)

Ref. No. or Q'ty	Part No.	SP	Description
R491	1-216-121-00	S	METAL, CHIP 1M 5% 1/10W
R492	1-216-081-00	S	METAL, CHIP 22K 5% 1/10W
R493	1-216-097-00	S	METAL, CHIP 5.6K 5% 1/10W
R494	1-216-097-00	S	METAL, CHIP 5.6K 5% 1/10W
R495	1-216-049-00	S	METAL, CHIP 1K 5% 1/10W
R496	1-216-121-00	S	METAL, CHIP 1M 5% 1/10W
R498	1-216-073-00	S	METAL, CHIP 10K 5% 1/10W
R499	1-216-025-00	S	METAL, CHIP 100 5% 1/10W
R501	1-216-089-00	S	METAL, CHIP 47K 5% 1/10W
R503	1-216-097-00	S	METAL, CHIP 100K 5% 1/10W
R504	1-216-117-00	S	METAL 680K 5% 1/10W
R507	1-216-097-00	S	METAL, CHIP 100K 5% 1/10W
R508	1-216-081-00	S	METAL, CHIP 22K 5% 1/10W
R509	1-216-081-00	S	METAL, CHIP 22K 5% 1/10W
R510	1-216-689-11	S	METAL, CHIP 39K 0.5% 1/10W
R511	1-216-089-00	S	METAL, CHIP 6.8K 5% 1/10W
R512	1-216-689-11	S	METAL, CHIP 39K 0.5% 1/10W
R513	1-216-049-00	S	METAL, CHIP 1K 5% 1/10W
R514	1-216-049-00	S	METAL, CHIP 1K 5% 1/10W
R515	1-216-089-00	S	METAL, CHIP 47K 5% 1/10W
R516	1-216-073-00	S	METAL, CHIP 10K 5% 1/10W
R517	1-216-097-00	S	METAL, CHIP 100K 5% 1/10W
R518	1-216-121-00	S	METAL, CHIP 1M 5% 1/10W
R519	1-216-033-00	S	METAL, CHIP 220 5% 1/10W
R521	1-216-025-00	S	METAL, CHIP 100 5% 1/10W
R522	1-216-121-00	S	METAL, CHIP 1M 5% 1/10W
R523	1-216-049-00	S	METAL, CHIP 1K 5% 1/10W
R524	1-216-049-00	S	METAL, CHIP 1K 5% 1/10W
R525	1-216-073-00	S	METAL, CHIP 10K 5% 1/10W
R526	1-216-073-00	S	METAL, CHIP 10K 5% 1/10W
R527	1-216-057-00	S	METAL, CHIP 2.2K 5% 1/10W
R528	1-216-049-00	S	METAL, CHIP 1K 5% 1/10W
R529	1-216-049-00	S	METAL, CHIP 1K 5% 1/10W
R530	1-216-049-00	S	METAL, CHIP 1K 5% 1/10W
R531	1-216-049-00	S	METAL, CHIP 1K 5% 1/10W
R532	1-216-049-00	S	METAL, CHIP 1K 5% 1/10W
R533	1-216-025-00	S	METAL, CHIP 100 5% 1/10W
R534	1-216-025-00	S	METAL, CHIP 100 5% 1/10W
R535	1-216-025-00	S	METAL, CHIP 100 5% 1/10W
R536	1-216-025-00	S	METAL, CHIP 100 5% 1/10W
R537	1-216-025-00	S	METAL, CHIP 100 5% 1/10W
R538	1-216-025-00	S	METAL, CHIP 100 5% 1/10W
R539	1-216-025-00	S	METAL, CHIP 100 5% 1/10W
R541	1-216-025-00	S	METAL, CHIP 100 5% 1/10W
R542	1-216-025-00	S	METAL, CHIP 100 5% 1/10W
R543	1-216-089-00	S	METAL, CHIP 47K 5% 1/10W
R544	1-216-089-00	S	METAL, CHIP 47K 5% 1/10W
R545	1-216-089-00	S	METAL, CHIP 47K 5% 1/10W
R546	1-216-089-00	S	METAL, CHIP 47K 5% 1/10W
R547	1-216-089-00	S	METAL, CHIP 47K 5% 1/10W
R548	1-216-089-00	S	METAL, CHIP 47K 5% 1/10W
R549	1-216-089-00	S	METAL, CHIP 47K 5% 1/10W
R601	1-216-097-00	S	METAL, CHIP 100K 5% 1/10W
R602	1-216-675-11	S	METAL, CHIP 10K 0.5% 1/10W
R603	1-216-675-11	S	METAL, CHIP 10K 0.5% 1/10W
R604	1-216-097-00	S	METAL, CHIP 100K 5% 1/10W
R605	1-216-073-00	S	METAL, CHIP 10K 5% 1/10W
R606	1-216-073-00	S	METAL, CHIP 10K 5% 1/10W
R607	1-216-073-00	S	METAL, CHIP 10K 5% 1/10W

(SS-48DP BOARD)

Ref. No. or Q'ty	Part No.	SP	Description
R608	1-216-073-00	S	METAL, CHIP 10K 5% 1/10W
R609	1-216-097-00	S	METAL, CHIP 100K 5% 1/10W
R610	1-216-097-00	S	METAL, CHIP 100K 5% 1/10W
R611	1-216-085-00	S	METAL, CHIP 33K 5% 1/10W
R612	1-216-109-00	S	METAL, CHIP 330K 5% 1/10W
R613	1-216-085-00	S	METAL, CHIP 33K 5% 1/10W
R614	1-216-109-00	S	METAL, CHIP 330K 5% 1/10W
R615	1-216-073-00	S	METAL, CHIP 10K 5% 1/10W
R616	1-216-073-00	S	METAL, CHIP 10K 5% 1/10W
R617	1-216-073-00	S	METAL, CHIP 10K 5% 1/10W
R618	1-216-073-00	S	METAL, CHIP 10K 5% 1/10W
R619	1-216-073-00	S	METAL, CHIP 10K 5% 1/10W
R620	1-216-073-00	S	METAL, CHIP 10K 5% 1/10W
R621	1-216-073-00	S	METAL, CHIP 10K 5% 1/10W
R622	1-216-073-00	S	METAL, CHIP 10K 5% 1/10W
R624	1-216-089-00	S	METAL, CHIP 47K 5% 1/10W
R626	1-216-089-00	S	METAL, CHIP 47K 5% 1/10W
R627	1-216-073-00	S	METAL, CHIP 10K 5% 1/10W
R629	1-216-049-00	S	METAL, CHIP 1K 5% 1/10W
R631	1-216-089-00	S	METAL, CHIP 47K 5% 1/10W
R632	1-216-073-00	S	METAL, CHIP 10K 5% 1/10W
R634	1-216-097-00	S	METAL, CHIP 100K 5% 1/10W
R635	1-216-097-00	S	METAL, CHIP 100K 5% 1/10W
R636	1-216-097-00	S	METAL, CHIP 100K 5% 1/10W
R637	1-216-097-00	S	METAL, CHIP 100K 5% 1/10W
R638	1-216-097-00	S	METAL, CHIP 100K 5% 1/10W
R639	1-216-097-00	S	METAL, CHIP 100K 5% 1/10W
R640	1-216-097-00	S	METAL, CHIP 100K 5% 1/10W
R641	1-216-097-00	S	METAL, CHIP 100K 5% 1/10W
R642	1-216-089-00	S	METAL, CHIP 47K 5% 1/10W
R643	1-216-089-00	S	METAL, CHIP 47K 5% 1/10W
R644	1-216-089-00	S	METAL, CHIP 47K 5% 1/10W
R646	1-216-073-00	S	METAL, CHIP 10K 5% 1/10W
R647	1-216-073-00	S	METAL, CHIP 10K 5% 1/10W
R648	1-216-049-00	S	METAL, CHIP 1K 5% 1/10W
R649	1-216-105-00	S	METAL, CHIP 220K 5% 1/10W
R650	1-216-105-00	S	METAL, CHIP 220K 5% 1/10W
R651	1-216-085-00	S	METAL, CHIP 33K 5% 1/10W
R652	1-216-031-00	S	METAL, CHIP 180 5% 1/10W
R653	1-216-031-00	S	METAL, CHIP 180 5% 1/10W
R654	1-216-031-00	S	METAL, CHIP 180 5% 1/10W
R655	1-249-411-11	S	CARBON 330 5% 1/4W
R656	1-249-411-11	S	CARBON 330 5% 1/4W
R657	1-216-089-00	S	METAL, CHIP 47K 5% 1/10W
R658	1-216-073-00	S	METAL, CHIP 10K 5% 1/10W
R661	1-216-071-00	S	METAL, CHIP 8.2K 5% 1/10W
R662	1-216-049-00	S	METAL, CHIP 1K 5% 1/10W
R663	1-216-049-00	S	METAL, CHIP 1K 5% 1/10W
R664	1-216-029-00	S	METAL, CHIP 150 5% 1/10W
R668	1-216-025-00	S	METAL, CHIP 100 5% 1/10W
R669	1-216-025-00	S	METAL, CHIP 100 5% 1/10W
R670	1-216-089-00	S	METAL, CHIP 47K 5% 1/10W
R671	1-216-295-00	S	METAL, CHIP 0-OHM
R701	1-216-073-00	S	METAL, CHIP 10K 5% 1/10W
R702	1-216-073-00	S	METAL, CHIP 10K 5% 1/10W
R703	1-216-057-00	S	METAL, CHIP 2.2K 5% 1/10W
R704	1-216-057-00	S	METAL, CHIP 2.2K 5% 1/10W
R705	1-216-073-00	S	METAL, CHIP 10K 5% 1/10W

(SS-48DP BOARD)

Ref. No. or Q'ty	Part No.	SP	Description
R706	1-216-073-00	s	METAL, CHIP 10K 5% 1/10W
R707	1-216-073-00	s	METAL, CHIP 10K 5% 1/10W
R708	1-216-073-00	s	METAL, CHIP 10K 5% 1/10W
R709	1-216-073-00	s	METAL, CHIP 10K 5% 1/10W
R710	1-216-073-00	s	METAL, CHIP 10K 5% 1/10W
R711	1-216-073-00	s	METAL, CHIP 10K 5% 1/10W
R712	1-216-073-00	s	METAL, CHIP 10K 5% 1/10W
R713	1-216-089-00	s	METAL, CHIP 47K 5% 1/10W
R714	1-216-089-00	s	METAL, CHIP 47K 5% 1/10W
R715	1-216-073-00	s	METAL, CHIP 10K 5% 1/10W
R716	1-216-073-00	s	METAL, CHIP 10K 5% 1/10W
R717	1-216-073-00	s	METAL, CHIP 10K 5% 1/10W
R718	1-216-073-00	s	METAL, CHIP 10K 5% 1/10W
R719	1-216-073-00	s	METAL, CHIP 10K 5% 1/10W
R720	1-216-073-00	s	METAL, CHIP 10K 5% 1/10W
R721	1-216-109-00	s	METAL, CHIP 330K 5% 1/10W
R722	1-216-109-00	s	METAL, CHIP 330K 5% 1/10W
R723	1-216-073-00	s	METAL, CHIP 10K 5% 1/10W
R724	1-216-073-00	s	METAL, CHIP 10K 5% 1/10W
R725	1-216-089-00	s	METAL, CHIP 47K 5% 1/10W
R726	1-216-089-00	s	METAL, CHIP 47K 5% 1/10W
R727	1-216-049-00	s	METAL, CHIP 1K 5% 1/10W
R728	1-216-049-00	s	METAL, CHIP 1K 5% 1/10W
R729	1-216-081-00	s	METAL, CHIP 22K 5% 1/10W
R730	1-216-081-00	s	METAL, CHIP 22K 5% 1/10W
R731	1-216-081-00	s	METAL, CHIP 22K 5% 1/10W
R732	1-216-025-00	s	METAL, CHIP 100 5% 1/10W
R733	1-216-025-00	s	METAL, CHIP 100 5% 1/10W
R734	1-216-025-00	s	METAL, CHIP 100 5% 1/10W
R735	1-216-025-00	s	METAL, CHIP 100 5% 1/10W
R736	1-216-025-00	s	METAL, CHIP 100 5% 1/10W
R737	1-216-025-00	s	METAL, CHIP 100 5% 1/10W
R738	1-216-025-00	s	METAL, CHIP 100 5% 1/10W
R739	1-216-025-00	s	METAL, CHIP 100 5% 1/10W
R740	1-216-025-00	s	METAL, CHIP 100 5% 1/10W
R741	1-216-025-00	s	METAL, CHIP 100 5% 1/10W
R742	1-216-025-00	s	METAL, CHIP 100 5% 1/10W
R743	1-216-025-00	s	METAL, CHIP 100 5% 1/10W
R744	1-216-049-00	s	METAL, CHIP 1K 5% 1/10W
R745	1-216-073-00	s	METAL, CHIP 10K 5% 1/10W
R746	1-216-073-00	s	METAL, CHIP 10K 5% 1/10W
R747	1-216-081-00	s	METAL, CHIP 22K 5% 1/10W
R748	1-216-073-00	s	METAL, CHIP 10K 5% 1/10W
R749	1-216-073-00	s	METAL, CHIP 10K 5% 1/10W
R750	1-216-073-00	s	METAL, CHIP 10K 5% 1/10W
R751	1-216-073-00	s	METAL, CHIP 10K 5% 1/10W
R752	1-216-073-00	s	METAL, CHIP 10K 5% 1/10W
R753	1-216-073-00	s	METAL, CHIP 10K 5% 1/10W
R754	1-216-073-00	s	METAL, CHIP 10K 5% 1/10W
R755	1-216-073-00	s	METAL, CHIP 10K 5% 1/10W
R756	1-216-049-00	s	METAL, CHIP 1K 5% 1/10W
R757	1-216-295-00	s	METAL, CHIP 0-OHM
R758	1-216-295-00	s	METAL, CHIP 0-OHM
R759	1-216-073-00	s	METAL, CHIP 10K 5% 1/10W
R760	1-216-073-00	s	METAL, CHIP 10K 5% 1/10W
R761	1-216-089-00	s	METAL, CHIP 47K 5% 1/10W
R762	1-216-089-00	s	METAL, CHIP 47K 5% 1/10W
R763	1-216-089-00	s	METAL, CHIP 47K 5% 1/10W
R764	1-216-089-00	s	METAL, CHIP 47K 5% 1/10W

(SS-48DP BOARD)

Ref. No. or Q'ty	Part No.	SP	Description
R765	1-216-049-00	s	METAL, CHIP 1K 5% 1/10W
R766	1-216-049-00	s	METAL, CHIP 1K 5% 1/10W
R767	1-216-049-00	s	METAL, CHIP 1K 5% 1/10W
R768	1-216-049-00	s	METAL, CHIP 1K 5% 1/10W
R769	1-216-025-00	s	METAL, CHIP 100 5% 1/10W
R770	1-216-089-00	s	METAL, CHIP 47K 5% 1/10W
R771	1-216-065-00	s	METAL, CHIP 4.7K 5% 1/10W
R772	1-216-073-00	s	METAL, CHIP 10K 5% 1/10W
R773	1-216-033-00	s	METAL, CHIP 220 5% 1/10W
R774	1-216-089-00	s	METAL, CHIP 47K 5% 1/10W
R775	1-216-065-00	s	METAL, CHIP 4.7K 5% 1/10W
R776	1-216-073-00	s	METAL, CHIP 10K 5% 1/10W
R777	1-216-033-00	s	METAL, CHIP 220 5% 1/10W
R778	1-216-089-00	s	METAL, CHIP 47K 5% 1/10W
R779	1-216-065-00	s	METAL, CHIP 4.7K 5% 1/10W
R780	1-216-073-00	s	METAL, CHIP 10K 5% 1/10W
R781	1-216-049-00	s	METAL, CHIP 1K 5% 1/10W
R782	1-216-089-00	s	METAL, CHIP 47K 5% 1/10W
R783	1-216-065-00	s	METAL, CHIP 4.7K 5% 1/10W
R784	1-216-033-00	s	METAL, CHIP 220 5% 1/10W
R785	1-216-073-00	s	METAL, CHIP 10K 5% 1/10W
R786	1-216-089-00	s	METAL, CHIP 47K 5% 1/10W
R787	1-216-065-00	s	METAL, CHIP 4.7K 5% 1/10W
R788	1-216-033-00	s	METAL, CHIP 220 5% 1/10W
R789	1-216-073-00	s	METAL, CHIP 10K 5% 1/10W
R790	1-216-073-00	s	METAL, CHIP 10K 5% 1/10W
R791	1-216-049-00	s	METAL, CHIP 1K 5% 1/10W
R792	1-216-033-00	s	METAL, CHIP 220 5% 1/10W
R793	1-216-089-00	s	METAL, CHIP 47K 5% 1/10W
R794	1-216-073-00	s	METAL, CHIP 10K 5% 1/10W
R795	1-216-025-00	s	METAL, CHIP 100 5% 1/10W
R796	1-216-025-00	s	METAL, CHIP 100 5% 1/10W
R797	1-216-025-00	s	METAL, CHIP 100 5% 1/10W
R798	1-216-025-00	s	METAL, CHIP 100 5% 1/10W
R799	1-216-025-00	s	METAL, CHIP 100 5% 1/10W
R801	1-216-085-00	s	METAL, CHIP 33K 5% 1/10W
R802	1-216-089-00	s	METAL, CHIP 47K 5% 1/10W
R803	1-216-089-00	s	METAL, CHIP 47K 5% 1/10W
R804	1-216-089-00	s	METAL, CHIP 47K 5% 1/10W
R805	1-216-049-00	s	METAL, CHIP 1K 5% 1/10W
R806	1-216-057-00	s	METAL, CHIP 2.2K 5% 1/10W
R807	1-216-121-00	s	METAL, CHIP 1M 5% 1/10W
R808	1-216-049-00	s	METAL, CHIP 1K 5% 1/10W
R809	1-216-085-00	s	METAL, CHIP 33K 5% 1/10W
R810	1-216-089-00	s	METAL, CHIP 47K 5% 1/10W
R811	1-216-089-00	s	METAL, CHIP 47K 5% 1/10W
R812	1-216-089-00	s	METAL, CHIP 47K 5% 1/10W
R813	1-216-049-00	s	METAL, CHIP 1K 5% 1/10W
R814	1-216-057-00	s	METAL, CHIP 2.2K 5% 1/10W
R815	1-216-121-00	s	METAL, CHIP 1M 5% 1/10W
R816	1-216-049-00	s	METAL, CHIP 1K 5% 1/10W
R817	1-216-057-00	s	METAL, CHIP 2.2K 5% 1/10W
R818	1-216-097-00	s	METAL, CHIP 100K 5% 1/10W
R819	1-216-085-00	s	METAL, CHIP 33K 5% 1/10W
R820	1-216-065-00	s	METAL, CHIP 4.7K 5% 1/10W
R822	1-216-097-00	s	METAL, CHIP 100K 5% 1/10W
R823	1-216-049-00	s	METAL, CHIP 1K 5% 1/10W
R825	1-216-061-00	s	METAL, CHIP 3.3K 5% 1/10W
R826	1-216-097-00	s	METAL, CHIP 100K 5% 1/10W

(SS-48DP BOARD)

Ref. No. or Q'ty	Part No.	SP	Description
R827	1-216-085-00	s	METAL, CHIP 33K 5% 1/10W
R828	1-216-085-00	s	METAL, CHIP 33K 5% 1/10W
R829	1-216-049-00	s	METAL, CHIP 1K 5% 1/10W
R830	1-216-097-00	s	METAL, CHIP 100K 5% 1/10W
R831	1-216-061-00	s	METAL, CHIP 3.3K 5% 1/10W
R832	1-216-105-00	s	METAL, CHIP 220K 5% 1/10W
R833	1-216-121-00	s	METAL, CHIP 1M 5% 1/10W
R837	1-216-073-00	s	METAL, CHIP 10K 5% 1/10W
R838	1-216-077-00	s	METAL, CHIP 15K 5% 1/10W
R839	1-216-001-00	s	METAL, CHIP 10 5% 1/10W
R840	1-216-025-00	s	METAL, CHIP 100 5% 1/10W
R841	1-216-061-00	s	METAL, CHIP 3.3K 5% 1/10W
R842	1-216-089-00	s	METAL, CHIP 47K 5% 1/10W
R843	1-216-089-00	s	METAL, CHIP 47K 5% 1/10W
R844	1-216-089-00	s	METAL, CHIP 47K 5% 1/10W
R845	1-216-073-00	s	METAL, CHIP 10K 5% 1/10W
R846	1-216-049-00	s	METAL, CHIP 1K 5% 1/10W
R847	1-216-049-00	s	METAL, CHIP 1K 5% 1/10W
R848	1-216-049-00	s	METAL, CHIP 1K 5% 1/10W
R849	1-216-049-00	s	METAL, CHIP 1K 5% 1/10W
R850	1-216-049-00	s	METAL, CHIP 1K 5% 1/10W
R851	1-216-049-00	s	METAL, CHIP 1K 5% 1/10W
R852	1-216-049-00	s	METAL, CHIP 1K 5% 1/10W
R853	1-216-049-00	s	METAL, CHIP 1K 5% 1/10W
R854	1-216-049-00	s	METAL, CHIP 1K 5% 1/10W
R855	1-216-025-00	s	METAL, CHIP 100 5% 1/10W
R856	1-216-049-00	s	METAL, CHIP 1K 5% 1/10W
R857	1-216-049-00	s	METAL, CHIP 1K 5% 1/10W
R858	1-216-049-00	s	METAL, CHIP 1K 5% 1/10W
R859	1-216-049-00	s	METAL, CHIP 1K 5% 1/10W
R860	1-216-049-00	s	METAL, CHIP 1K 5% 1/10W
R861	1-216-049-00	s	METAL, CHIP 1K 5% 1/10W
R862	1-216-049-00	s	METAL, CHIP 1K 5% 1/10W
R863	1-216-049-00	s	METAL, CHIP 1K 5% 1/10W
R864	1-216-073-00	s	METAL, CHIP 10K 5% 1/10W
R865	1-216-073-00	s	METAL, CHIP 10K 5% 1/10W
R866	1-216-073-00	s	METAL, CHIP 10K 5% 1/10W
R867	1-216-061-00	s	METAL, CHIP 3.3K 5% 1/10W
R868	1-216-061-00	s	METAL, CHIP 3.3K 5% 1/10W
R869	1-216-089-00	s	METAL, CHIP 47K 5% 1/10W
R870	1-216-089-00	s	METAL, CHIP 47K 5% 1/10W
R871	1-216-089-00	s	METAL, CHIP 47K 5% 1/10W
R872	1-216-089-00	s	METAL, CHIP 47K 5% 1/10W
R873	1-216-089-00	s	METAL, CHIP 47K 5% 1/10W
R874	1-216-089-00	s	METAL, CHIP 47K 5% 1/10W
R875	1-216-295-00	s	METAL, CHIP 0-OHM
R901	1-216-295-00	s	METAL, CHIP 0-OHM
S1	1-553-812-00	s	SWITCH, PUSH
S2	1-571-987-11	s	SWITCH, DIP 8-CKT
S201	1-570-856-11	s	SWITCH, SLIDE
S301	1-571-080-11	s	SWITCH, SLIDE
S302	1-553-812-00	s	SWITCH, PUSH
S303	1-553-812-00	s	SWITCH, PUSH
S304	1-553-812-00	s	SWITCH, PUSH
S801	1-571-987-11	s	SWITCH, DIP 8-CKT
S802	1-553-812-00	s	SWITCH, PUSH
X1	1-577-076-11	s	CRYSTAL, 16.000MHz
X101	1-567-870-11	s	RESONATOR, CERAMIC 614KHz

(SS-48DP BOARD)

Ref. No. or Q'ty	Part No.	SP	Description
X401	1-567-132-00	s	RESONATOR, CERAMIC 8.00MHz
X402	1-579-458-11	s	CRYSTAL 17.734475MHz
X501	1-567-867-11	s	CRYSTAL, 14.500MHz
X601	1-577-121-11	s	CRYSTAL 20.000MHz
X701	1-577-121-11	s	CRYSTAL 20.000MHz
X702	1-577-076-11	s	CRYSTAL, 16.000MHz

SWC-10 BOARD

Ref. No. or Q'ty	Part No.	SP	Description
1pc	A-6717-632-A	o	MOUNTED CIRCUIT BOARD, SWC-10
1pc	3-172-465-01	o	HOLDER, LED
1pc	3-172-464-01	o	HOLDER (R), LED
C1	1-163-037-11	s	CERAMIC, CHIP 0.022uF 10% 25V
C2	1-124-455-00	s	ELECT 100uF 20% 16V
C3	1-163-037-11	s	CERAMIC, CHIP 0.022uF 10% 25V
C4	1-124-455-00	s	ELECT 100uF 20% 16V
C5	1-163-037-11	s	CERAMIC, CHIP 0.022uF 10% 25V
C6	1-124-589-11	s	ELECT 47uF 20% 16V
C7	1-163-037-11	s	CERAMIC, CHIP 0.022uF 10% 25V
C8	1-124-589-11	s	ELECT 47uF 20% 16V
C9	1-163-105-00	s	CERAMIC, CHIP 33PF 5% 50V
C10	1-163-105-00	s	CERAMIC, CHIP 33PF 5% 50V
C11	1-163-037-11	s	CERAMIC, CHIP 0.022uF 10% 25V
C12	1-163-037-11	s	CERAMIC, CHIP 0.022uF 10% 25V
CN572	1-506-485-11	s	CONNECTOR, 6P, MALE
CN573	1-506-486-11	s	CONNECTOR, 7P, MALE
CN578	1-506-481-11	s	CONNECTOR, 2P, MALE
CN579	1-506-481-11	s	CONNECTOR, 2P, MALE
D1	8-719-820-28	s	LED TLG-256, GRN
D2	8-719-820-28	s	LED TLG-256, GRN
D3	8-719-820-28	s	LED TLG-256, GRN
D4	8-719-820-27	s	LED TLY-256, YEL
D5	8-719-820-27	s	LED TLY-256, YEL
D6	8-719-820-28	s	LED TLG-256, GRN
D11	8-719-820-28	s	LED TLG-256, GRN
D12	8-719-820-28	s	LED TLG-256, GRN
D13	8-719-820-28	s	LED TLG-256, GRN
D14	8-719-820-28	s	LED TLG-256, GRN
D16	8-719-820-28	s	LED TLG-256, GRN
D18	8-719-820-28	s	LED TLG-256, GRN
IC1	8-759-926-64	s	IC SN74HC367ANS
IC2	8-759-043-36	s	IC MC68HC05N4-SC406673
L1	1-412-533-11	s	INDUCTOR 47uH
L2	1-412-533-11	s	INDUCTOR 47uH
Q1	8-729-924-56	s	TRANSISTOR DTC123JU
Q2	8-729-924-56	s	TRANSISTOR DTC123JU
Q3	8-729-924-56	s	TRANSISTOR DTC123JU
Q10	8-729-924-56	s	TRANSISTOR DTC123JU
Q11	8-729-924-56	s	TRANSISTOR DTC123JU
Q12	8-729-924-56	s	TRANSISTOR DTC123JU
Q13	8-729-924-56	s	TRANSISTOR DTC123JU
Q15	8-729-924-56	s	TRANSISTOR DTC123JU
Q17	8-729-924-56	s	TRANSISTOR DTC123JU
R1	1-218-089-00	s	METAL, CHIP 47K 5% 1/10W
R2	1-216-089-00	s	METAL, CHIP 47K 5% 1/10W
R3	1-216-089-00	s	METAL, CHIP 47K 5% 1/10W
R4	1-216-041-00	s	METAL, CHIP 47Q 5% 1/10W
R5	1-216-065-00	s	METAL, CHIP 4.7K 5% 1/10W
R6	1-216-049-00	s	METAL, CHIP 1K 5% 1/10W
R7	1-216-073-00	s	METAL, CHIP 10K 5% 1/10W
R8	1-216-073-00	s	METAL, CHIP 10K 5% 1/10W
R9	1-216-073-00	s	METAL, CHIP 10K 5% 1/10W
R10	1-216-049-00	s	METAL, CHIP 1K 5% 1/10W
R11	1-216-073-00	s	METAL, CHIP 10K 5% 1/10W
R12	1-216-073-00	s	METAL, CHIP 10K 5% 1/10W

(SWC-10 BOARD)

Ref. No. or Q'ty	Part No.	SP	Description
R13	1-216-073-00	s	METAL, CHIP 10K 5% 1/10W
R14	1-216-073-00	s	METAL, CHIP 10K 5% 1/10W
R15	1-216-073-00	s	METAL, CHIP 10K 5% 1/10W
R16	1-216-049-00	s	METAL, CHIP 1K 5% 1/10W
R17	1-216-073-00	s	METAL, CHIP 10K 5% 1/10W
R18	1-216-121-00	s	METAL, CHIP 1M 5% 1/10W
R19	1-216-065-00	s	METAL, CHIP 4.7K 5% 1/10W
R20	1-216-089-00	s	METAL, CHIP 47K 5% 1/10W
R21	1-216-089-00	s	METAL, CHIP 47K 5% 1/10W
R22	1-216-073-00	s	METAL, CHIP 10K 5% 1/10W
R23	1-249-415-11	s	CARBON 680 5% 1/4W
R24	1-249-415-11	s	CARBON 680 5% 1/4W
R25	1-249-415-11	s	CARBON 680 5% 1/4W
R26	1-249-415-11	s	CARBON 680 5% 1/4W
R27	1-249-415-11	s	CARBON 680 5% 1/4W
R28	1-249-415-11	s	CARBON 680 5% 1/4W
R38	1-249-415-11	s	CARBON 680 5% 1/4W
R39	1-249-415-11	s	CARBON 680 5% 1/4W
R40	1-249-415-11	s	CARBON 680 5% 1/4W
R41	1-249-415-11	s	CARBON 680 5% 1/4W
R43	1-249-415-11	s	CARBON 680 5% 1/4W
R45	1-249-415-11	s	CARBON 680 5% 1/4W
S1	1-516-995-00	s	SWITCH, LEVER SLIDE
S2	1-516-961-00	s	SWITCH, LEVER SLIDE
S3	1-516-995-00	s	SWITCH, LEVER SLIDE
S4	1-516-961-00	s	SWITCH, LEVER SLIDE
S5	3-717-672-01	o	STOPPER, KY
S6	1-516-996-00	s	SWITCH, LEVER SLIDE
X1	1-567-192-11	s	RESONATOR, CERAMIC 4.00MHz

SMC-11 BOARD

Ref. No. or Q'ty	Part No.	SP	Description
1pc	A-6717-629-A	o	MOUNTED CIRCUIT BOARD, SMC-11
C1	1-126-177-11	s	ELECT 100uF 20% 10V
C2	1-163-037-11	s	CERAMIC, CHIP 0.022uF 10% 25V
C3	1-126-177-11	s	ELECT 100uF 20% 10V
C4	1-163-037-11	s	CERAMIC, CHIP 0.022uF 10% 25V
CN587	1-566-342-11	s	CONNECTOR, 30P, MALE
IC1	8-759-300-71	s	IC HD14053BFP
L1	1-410-470-11	s	INDUCTOR 10uH
L2	1-410-470-11	s	INDUCTOR 10uH
R1	1-218-061-00	s	METAL, CHIP 3.3K 5% 1/10W
R2	1-218-061-00	s	METAL, CHIP 3.3K 5% 1/10W
R3	1-216-057-00	s	METAL, CHIP 2.2K 5% 1/10W
R4	1-216-057-00	s	METAL, CHIP 2.2K 5% 1/10W
R6	1-216-085-00	s	METAL, CHIP 33K 5% 1/10W
R7	1-216-057-00	s	METAL, CHIP 2.2K 5% 1/10W
R9	1-216-049-00	s	METAL, CHIP 1K 5% 1/10W
R11	1-216-049-00	s	METAL, CHIP 1K 5% 1/10W
R13	1-216-049-00	s	METAL, CHIP 1K 5% 1/10W
RV1	1-237-696-11	s	RES, VAR, CARBON 5K
RV2	1-237-696-11	s	RES, VAR, CARBON 5K
RV3	1-237-696-11	s	RES, VAR, CARBON 5K
RV4	1-237-695-11	s	RES, VAR, CARBON 5K
RV6	1-237-695-11	s	RES, VAR, CARBON 5K
RV7	1-237-695-11	s	RES, VAR, CARBON 5K
S1	1-570-157-51	s	SWITCH, SLIDE
S2	1-570-157-51	s	SWITCH, SLIDE
S3	1-570-157-51	s	SWITCH, SLIDE
S4	1-570-157-51	s	SWITCH, SLIDE
S6	1-571-061-11	s	SWITCH, SLIDE
S7	1-570-157-51	s	SWITCH, SLIDE
S8	1-570-157-51	s	SWITCH, SLIDE
S9	1-570-157-51	s	SWITCH, SLIDE
S10	1-570-157-51	s	SWITCH, SLIDE
S11	1-570-157-51	s	SWITCH, SLIDE
S12	1-570-157-51	s	SWITCH, SLIDE
S15	1-554-949-11	s	SWITCH, SLIDE

SMC-12P BOARD

Ref. No. or Q'ty	Part No.	SP	Description
1pc	A-6717-630-A	o	MOUNTED CIRCUIT BOARD, SMC-12P
C1	1-163-037-11	s	CERAMIC, CHIP 0.022uF 10% 25V
C2	1-126-177-11	s	ELECT 100uF 20% 10V
C3	1-163-037-11	s	CERAMIC, CHIP 0.022uF 10% 25V
C4	1-126-177-11	s	ELECT 100uF 20% 10V
C5	1-163-105-00	s	CERAMIC, CHIP 33PF 5% 50V
C6	1-163-105-00	s	CERAMIC, CHIP 33PF 5% 50V
C7	1-163-037-11	s	CERAMIC, CHIP 0.022uF 10% 25V
C101	1-163-037-11	s	CERAMIC, CHIP 0.022uF 10% 25V
C102	1-163-037-11	s	CERAMIC, CHIP 0.022uF 10% 25V
C103	1-163-037-11	s	CERAMIC, CHIP 0.022uF 10% 25V
C104	1-163-037-11	s	CERAMIC, CHIP 0.022uF 10% 25V
C900	1-161-021-11	s	CERAMIC 0.047uF 10% 25V
CN569	1-580-846-11	s	CONNECTOR, BB 16P, MALE
CN570	1-580-846-11	s	CONNECTOR, BB 19P, MALE
CN577	1-565-772-11	o	CONNECTOR, PS 10P, MALE
CP1	1-548-152-11	o	HOUR METER, DIGITAL
D1	8-719-802-11	s	LED TLUG154, GRN
D2	8-719-802-11	s	LED TLUG154, GRN
D3	8-719-802-11	s	LED TLUG154, GRN
IC1	8-759-043-36	s	IC MC88HC05M4-SC406673
IC2	8-759-043-36	s	IC MC88HC05M4-SC406673
IC3	8-759-926-64	s	IC SN74HC367ANS
IC4	8-759-926-64	s	IC SN74HC367ANS
L1	1-412-533-11	s	INDUCTOR 47uH
Q1	8-729-924-56	s	TRANSISTOR DTC123JU
Q2	8-729-924-56	s	TRANSISTOR DTC123JU
Q3	8-729-924-56	s	TRANSISTOR DTC123JU
R1	1-216-089-00	s	METAL, CHIP 47K 5% 1/10W
R2	1-216-089-00	s	METAL, CHIP 47K 5% 1/10W
R3	1-216-089-00	s	METAL, CHIP 47K 5% 1/10W
R4	1-216-041-00	s	METAL, CHIP 470 5% 1/10W
R5	1-216-065-00	s	METAL, CHIP 4.7K 5% 1/10W
R6	1-216-065-00	s	METAL, CHIP 4.7K 5% 1/10W
R7	1-216-065-00	s	METAL, CHIP 4.7K 5% 1/10W
R8	1-216-065-00	s	METAL, CHIP 4.7K 5% 1/10W
R9	1-216-065-00	s	METAL, CHIP 4.7K 5% 1/10W
R10	1-216-065-00	s	METAL, CHIP 4.7K 5% 1/10W
R11	1-216-065-00	s	METAL, CHIP 4.7K 5% 1/10W
R12	1-216-065-00	s	METAL, CHIP 4.7K 5% 1/10W
R13	1-216-065-00	s	METAL, CHIP 4.7K 5% 1/10W
R14	1-216-065-00	s	METAL, CHIP 4.7K 5% 1/10W
R15	1-216-065-00	s	METAL, CHIP 4.7K 5% 1/10W
R16	1-216-065-00	s	METAL, CHIP 4.7K 5% 1/10W
R17	1-216-065-00	s	METAL, CHIP 4.7K 5% 1/10W
R18	1-216-065-00	s	METAL, CHIP 4.7K 5% 1/10W
R19	1-216-065-00	s	METAL, CHIP 4.7K 5% 1/10W
R20	1-216-065-00	s	METAL, CHIP 4.7K 5% 1/10W
R21	1-216-065-00	s	METAL, CHIP 4.7K 5% 1/10W
R22	1-216-089-00	s	METAL, CHIP 47K 5% 1/10W
R23	1-216-089-00	s	METAL, CHIP 47K 5% 1/10W
R24	1-216-121-00	s	METAL, CHIP 1M 5% 1/10W
R25	1-216-065-00	s	METAL, CHIP 4.7K 5% 1/10W
R26	1-216-065-00	s	METAL, CHIP 4.7K 5% 1/10W
R27	1-216-065-00	s	METAL, CHIP 4.7K 5% 1/10W

(SMC-12P BOARD)

Ref. No. or Q'ty	Part No.	SP	Description
R28	1-216-065-00	s	METAL, CHIP 4.7K 5% 1/10W
R29	1-216-065-00	s	METAL, CHIP 4.7K 5% 1/10W
R30	1-216-065-00	s	METAL, CHIP 4.7K 5% 1/10W
R31	1-216-065-00	s	METAL, CHIP 4.7K 5% 1/10W
R32	1-216-065-00	s	METAL, CHIP 4.7K 5% 1/10W
R33	1-216-065-00	s	METAL, CHIP 4.7K 5% 1/10W
R34	1-216-065-00	s	METAL, CHIP 4.7K 5% 1/10W
R35	1-216-065-00	s	METAL, CHIP 4.7K 5% 1/10W
R36	1-216-065-00	s	METAL, CHIP 4.7K 5% 1/10W
R37	1-216-065-00	s	METAL, CHIP 4.7K 5% 1/10W
R38	1-216-065-00	s	METAL, CHIP 4.7K 5% 1/10W
R39	1-216-065-00	s	METAL, CHIP 4.7K 5% 1/10W
R40	1-216-065-00	s	METAL, CHIP 4.7K 5% 1/10W
R41	1-216-037-00	s	METAL, CHIP 330 5% 1/10W
R42	1-216-037-00	s	METAL, CHIP 330 5% 1/10W
R43	1-216-037-00	s	METAL, CHIP 330 5% 1/10W
R44	1-216-089-00	s	METAL, CHIP 47K 5% 1/10W
R45	1-216-089-00	s	METAL, CHIP 47K 5% 1/10W
R46	1-216-089-00	s	METAL, CHIP 47K 5% 1/10W
R47	1-216-089-00	s	METAL, CHIP 47K 5% 1/10W
R48	1-216-089-00	s	METAL, CHIP 47K 5% 1/10W
R49	1-216-089-00	s	METAL, CHIP 47K 5% 1/10W
R50	1-216-089-00	s	METAL, CHIP 47K 5% 1/10W
R51	1-216-089-00	s	METAL, CHIP 47K 5% 1/10W
S1	1-571-908-11	s	SWITCH, SLIDE
S2	1-570-157-51	s	SWITCH, SLIDE
S3	1-570-157-51	s	SWITCH, SLIDE
S4	1-570-157-51	s	SWITCH, SLIDE
S6	1-570-157-51	s	SWITCH, SLIDE
S7	1-570-157-51	s	SWITCH, SLIDE
S8	1-571-908-11	s	SWITCH, SLIDE
S9	1-570-157-51	s	SWITCH, SLIDE
S11	1-570-157-51	s	SWITCH, SLIDE
S12	1-570-157-51	s	SWITCH, SLIDE
S13	1-570-157-51	s	SWITCH, SLIDE
S14	1-554-909-11	s	SWITCH, PUSH
S15	1-554-909-11	s	SWITCH, PUSH
TP10	1-537-385-11	o	TERMINAL BOARD, TP
X1	1-567-182-11	s	RESONATOR, CERAMIC 4.00MHz

TBC-17P BOARD

Ref. No. or Q'ty	Part No.	SP	Description
1pc	A-6727-386-A	o	MOUNTED CIRCUIT BOARD, TBC-17P
1pc	3-171-453-01	o	PLATE (L), SHIELD, CARD
1pc	3-171-454-02	o	SHEET (L), CARD
1pc	7-621-759-45	s	+PSW, 2.6X6
C1	1-163-037-11	s	CERAMIC, CHIP 0.022uF 10% 25V
C2	1-126-101-11	s	ELECT 100uF 20% 16V
C3	1-163-037-11	s	CERAMIC, CHIP 0.022uF 10% 25V
C4	1-126-101-11	s	ELECT 100uF 20% 16V
C5	1-163-037-11	s	CERAMIC, CHIP 0.022uF 10% 25V
C6	1-126-101-11	s	ELECT 100uF 20% 16V
C7	1-163-037-11	s	CERAMIC, CHIP 0.022uF 10% 25V
C8	1-126-101-11	s	ELECT 100uF 20% 16V
C9	1-124-477-11	s	ELECT 47uF 20% 25V
C10	1-124-477-11	s	ELECT 47uF 20% 25V
C11	1-124-477-11	s	ELECT 47uF 20% 25V
C13	1-163-037-11	s	CERAMIC, CHIP 0.022uF 10% 25V
C14	1-126-101-11	s	ELECT 100uF 20% 16V
C15	1-163-037-11	s	CERAMIC, CHIP 0.022uF 10% 25V
C16	1-126-101-11	s	ELECT 100uF 20% 16V
C100	1-126-101-11	s	ELECT 100uF 20% 16V
C101	1-163-037-11	s	CERAMIC, CHIP 0.022uF 10% 25V
C102	1-124-903-11	s	ELECT 1uF 20% 50V
C103	1-124-907-11	s	ELECT 10uF 20% 50V
C105	1-163-037-11	s	CERAMIC, CHIP 0.022uF 10% 25V
C106	1-164-004-11	s	CERAMIC, CHIP 0.1uF 10% 25V
C107	1-163-809-11	s	CERAMIC, CHIP 0.047uF 10% 25V
C108	1-163-009-11	s	CERAMIC, CHIP 0.001uF 10% 50V
C109	1-163-809-11	s	CERAMIC, CHIP 0.047uF 10% 25V
C110	1-131-347-00	s	TANTALUM 1uF 10% 35V
C111	1-131-379-00	s	TANTALUM 22uF 10% 10V
C112	1-124-477-11	s	ELECT 47uF 20% 25V
C113	1-163-037-11	s	CERAMIC, CHIP 0.022uF 10% 25V
C114	1-124-907-11	s	ELECT 10uF 20% 50V
C115	1-124-477-11	s	ELECT 47uF 20% 25V
C116	1-163-037-11	s	CERAMIC, CHIP 0.022uF 10% 25V
C117	1-163-037-11	s	CERAMIC, CHIP 0.022uF 10% 25V
C118	1-163-037-11	s	CERAMIC, CHIP 0.022uF 10% 25V
C119	1-163-037-11	s	CERAMIC, CHIP 0.022uF 10% 25V
C120	1-163-037-11	s	CERAMIC, CHIP 0.022uF 10% 25V
C121	1-124-477-11	s	ELECT 47uF 20% 25V
C122	1-163-037-11	s	CERAMIC, CHIP 0.022uF 10% 25V
C123	1-163-037-11	s	CERAMIC, CHIP 0.022uF 10% 25V
C124	1-163-037-11	s	CERAMIC, CHIP 0.022uF 10% 25V
C125	1-163-227-11	s	CERAMIC, CHIP 10PF 5% 50V
C126	1-163-251-11	s	CERAMIC, CHIP 100PF 5% 50V
C128	1-164-004-11	s	CERAMIC, CHIP 0.1uF 10% 25V
C150	1-164-004-11	s	CERAMIC, CHIP 0.1uF 10% 25V
C151	1-164-004-11	s	CERAMIC, CHIP 0.1uF 10% 25V
C152	1-163-037-11	s	CERAMIC, CHIP 0.022uF 10% 25V
C153	1-163-037-11	s	CERAMIC, CHIP 0.022uF 10% 25V
C154	1-164-004-11	s	CERAMIC, CHIP 0.1uF 10% 25V
C155	1-124-907-11	s	ELECT 10uF 20% 50V
C156	1-163-037-11	s	CERAMIC, CHIP 0.022uF 10% 25V
C157	1-163-037-11	s	CERAMIC, CHIP 0.022uF 10% 25V
C158	1-124-477-11	s	ELECT 47uF 20% 25V
C159	1-163-251-11	s	CERAMIC, CHIP 100PF 5% 50V
C161	1-163-037-11	s	CERAMIC, CHIP 0.022uF 10% 25V
C162	1-163-037-11	s	CERAMIC, CHIP 0.022uF 10% 25V
C200	1-126-101-11	s	ELECT 100uF 20% 16V

(TBC-17P BOARD)

Ref. No. or Q'ty	Part No.	SP	Description
C201	1-163-037-11	s	CERAMIC, CHIP 0.022uF 10% 25V
C202	1-124-903-11	s	ELECT 1uF 20% 50V
C203	1-124-907-11	s	ELECT 10uF 20% 50V
C205	1-163-037-11	s	CERAMIC, CHIP 0.022uF 10% 25V
C206	1-164-004-11	s	CERAMIC, CHIP 0.1uF 10% 25V
C207	1-163-809-11	s	CERAMIC, CHIP 0.047uF 10% 25V
C208	1-163-009-11	s	CERAMIC, CHIP 0.001uF 10% 50V
C209	1-163-809-11	s	CERAMIC, CHIP 0.047uF 10% 25V
C210	1-131-347-00	s	TANTALUM 1uF 10% 35V
C211	1-124-477-11	s	ELECT 47uF 20% 25V
C212	1-163-037-11	s	CERAMIC, CHIP 0.022uF 10% 25V
C213	1-124-907-11	s	ELECT 10uF 20% 50V
C214	1-124-477-11	s	ELECT 47uF 20% 25V
C215	1-163-037-11	s	CERAMIC, CHIP 0.022uF 10% 25V
C216	1-163-037-11	s	CERAMIC, CHIP 0.022uF 10% 25V
C217	1-163-037-11	s	CERAMIC, CHIP 0.022uF 10% 25V
C218	1-163-037-11	s	CERAMIC, CHIP 0.022uF 10% 25V
C219	1-163-037-11	s	CERAMIC, CHIP 0.022uF 10% 25V
C220	1-124-477-11	s	ELECT 47uF 20% 25V
C221	1-163-037-11	s	CERAMIC, CHIP 0.022uF 10% 25V
C222	1-163-227-11	s	CERAMIC, CHIP 10PF 5% 50V
C223	1-131-377-00	s	TANTALUM 10uF 10% 10V
C224	1-163-251-11	s	CERAMIC, CHIP 100PF 5% 50V
C225	1-163-084-00	s	CERAMIC, CHIP 1.5PF 50V
C226	1-164-004-11	s	CERAMIC, CHIP 0.1uF 10% 25V
C227	1-126-157-11	s	ELECT 10uF 20% 16V
C300	1-163-251-11	s	CERAMIC, CHIP 100PF 5% 50V
C301	1-163-037-11	s	CERAMIC, CHIP 0.022uF 10% 25V
C302	1-163-251-11	s	CERAMIC, CHIP 100PF 5% 50V
C303	1-163-133-00	s	CERAMIC, CHIP 470PF 5% 50V
C304	1-163-263-11	s	CERAMIC, CHIP 330PF 5% 50V
C305	1-124-477-11	s	ELECT 47uF 20% 25V
C306	1-163-037-11	s	CERAMIC, CHIP 0.022uF 10% 25V
C307	1-124-477-11	s	ELECT 47uF 20% 25V
C308	1-163-037-11	s	CERAMIC, CHIP 0.022uF 10% 25V
C310	1-163-037-11	s	CERAMIC, CHIP 0.022uF 10% 25V
C311	1-124-907-11	s	ELECT 10uF 20% 50V
C312	1-124-907-11	s	ELECT 10uF 20% 50V
C313	1-163-809-11	s	CERAMIC, CHIP 0.047uF 10% 25V
C314	1-163-037-11	s	CERAMIC, CHIP 0.022uF 10% 25V
C315	1-163-037-11	s	CERAMIC, CHIP 0.022uF 10% 25V
C316	1-124-477-11	s	ELECT 47uF 20% 25V
C317	1-163-037-11	s	CERAMIC, CHIP 0.022uF 10% 25V
C318	1-163-037-11	s	CERAMIC, CHIP 0.022uF 10% 25V
C319	1-163-037-11	s	CERAMIC, CHIP 0.022uF 10% 25V
C320	1-163-037-11	s	CERAMIC, CHIP 0.022uF 10% 25V
C321	1-163-037-11	s	CERAMIC, CHIP 0.022uF 10% 25V
C322	1-124-477-11	s	ELECT 47uF 20% 25V
C324	1-163-109-00	s	CERAMIC, CHIP 47PF 5% 50V
C325	1-163-251-11	s	CERAMIC, CHIP 100PF 5% 50V
C328	1-163-251-11	s	CERAMIC, CHIP 100PF 5% 50V
C329	1-163-133-00	s	CERAMIC, CHIP 470PF 5% 50V
C330	1-164-004-11	s	CERAMIC, CHIP 0.1uF 10% 25V
C331	1-164-232-11	s	CERAMIC 0.01uF 10% 100V
C332	1-124-907-11	s	ELECT 10uF 20% 50V
C333	1-124-907-11	s	ELECT 10uF 20% 50V
C334	1-164-004-11	s	CERAMIC, CHIP 0.1uF 10% 25V
C335	1-163-106-00	s	CERAMIC, CHIP 33PF 5% 50V
C336	1-163-037-11	s	CERAMIC, CHIP 0.022uF 10% 25V

(TBC-17P BOARD)

Ref. No. or Q'ty	Part No.	SP	Description
C337	1-131-347-00	s	TANTALUM 1uF 10% 35V
C338	1-163-037-11	s	CERAMIC, CHIP 0.022uF 10% 25V
C339	1-163-037-11	s	CERAMIC, CHIP 0.022uF 10% 25V
C340	1-163-037-11	s	CERAMIC, CHIP 0.022uF 10% 25V
C341	1-163-037-11	s	CERAMIC, CHIP 0.022uF 10% 25V
C342	1-163-037-11	s	CERAMIC, CHIP 0.022uF 10% 25V
C345	1-163-251-11	s	CERAMIC, CHIP 100PF 5% 50V
C348	1-163-037-11	s	CERAMIC, CHIP 0.022uF 10% 25V
C348	1-163-125-09	s	CERAMIC, CHIP 220PF 5% 50V
C349	1-163-109-00	s	CERAMIC, CHIP 47PF 5% 50V
C350	1-163-251-11	s	CERAMIC, CHIP 100PF 5% 50V
C351	1-164-004-11	s	CERAMIC, CHIP 0.1uF 10% 25V
C352	1-126-101-11	s	ELECT 100uF 20% 16V
C353	1-164-222-11	s	CERAMIC 0.22uF 25V
C354	1-131-349-09	s	TANTALUM 2.2uF 10% 35V
C355	1-131-349-00	s	TANTALUM 2.2uF 10% 35V
C356	1-164-222-11	s	CERAMIC 0.22uF 25V
C357	1-131-363-00	s	TANTALUM 4.7uF 10% 20V
C358	1-131-363-00	s	TANTALUM 4.7uF 10% 20V
C359	1-124-477-11	s	ELECT 47uF 20% 25V
C360	1-164-232-11	s	CERAMIC 0.01uF 10% 100V
C362	1-163-037-11	s	CERAMIC, CHIP 0.022uF 10% 25V
C363	1-124-477-11	s	ELECT 47uF 20% 25V
C364	1-124-477-11	s	ELECT 47uF 20% 25V
C365	1-163-037-11	s	CERAMIC, CHIP 0.022uF 10% 25V
C366	1-124-477-11	s	ELECT 47uF 20% 25V
C367	1-163-037-11	s	CERAMIC, CHIP 0.022uF 10% 25V
C368	1-102-074-00	s	CERAMIC 0.001uF 10% 50V
C401	1-163-037-11	s	CERAMIC, CHIP 0.022uF 10% 25V
C402	1-124-477-11	s	ELECT 47uF 20% 25V
C403	1-163-037-11	s	CERAMIC, CHIP 0.022uF 10% 25V
C404	1-163-106-00	s	CERAMIC 36PF 5% 50V
C405	1-163-263-11	s	CERAMIC, CHIP 330PF 5% 50V
C406	1-163-120-00	s	CERAMIC 130PF 5% 50V
C407	1-124-477-11	s	ELECT 47uF 20% 25V
C408	1-163-037-11	s	CERAMIC, CHIP 0.022uF 10% 25V
C409	1-163-037-11	s	CERAMIC, CHIP 0.022uF 10% 25V
C410	1-163-037-11	s	CERAMIC, CHIP 0.022uF 10% 25V
C411	1-124-907-11	s	ELECT 10uF 20% 50V
C412	1-124-907-11	s	ELECT 10uF 20% 50V
C413	1-163-809-11	s	CERAMIC, CHIP 0.047uF 10% 25V
C414	1-163-037-11	s	CERAMIC, CHIP 0.022uF 10% 25V
C416	1-124-477-11	s	ELECT 47uF 20% 25V
C417	1-163-037-11	s	CERAMIC, CHIP 0.022uF 10% 25V
C418	1-163-037-11	s	CERAMIC, CHIP 0.022uF 10% 25V
C419	1-163-037-11	s	CERAMIC, CHIP 0.022uF 10% 25V
C420	1-163-037-11	s	CERAMIC, CHIP 0.022uF 10% 25V
C421	1-163-037-11	s	CERAMIC, CHIP 0.022uF 10% 25V
C422	1-124-477-11	s	ELECT 47uF 20% 25V
C425	1-163-251-11	s	CERAMIC, CHIP 100PF 5% 50V
C426	1-163-037-11	s	CERAMIC, CHIP 0.022uF 10% 25V
C427	1-164-004-11	s	CERAMIC, CHIP 0.1uF 10% 25V
C428	1-163-245-11	s	CERAMIC 56PF 5% 50V
C429	1-163-127-00	s	CERAMIC, CHIP 270PF 5% 50V
C430	1-164-232-11	s	CERAMIC 0.01uF 10% 100V
C431	1-164-232-11	s	CERAMIC 0.01uF 10% 100V
C432	1-124-907-11	s	ELECT 10uF 20% 50V
C433	1-163-037-11	s	CERAMIC, CHIP 0.022uF 10% 25V
C434	1-163-037-11	s	CERAMIC, CHIP 0.022uF 10% 25V

(TBC-17P BOARD)

Ref. No. or Q'ty	Part No.	SP	Description
C435	1-163-037-11	s	CERAMIC, CHIP 0.022uF 10% 25V
C436	1-124-907-11	s	ELECT 10uF 20% 50V
C437	1-164-004-11	s	CERAMIC, CHIP 0.1uF 10% 25V
C438	1-163-105-00	s	CERAMIC, CHIP 33PF 5% 50V
C439	1-163-251-11	s	CERAMIC, CHIP 100PF 5% 50V
C440	1-163-037-11	s	CERAMIC, CHIP 0.022uF 10% 25V
C442	1-163-125-00	s	CERAMIC, CHIP 220PF 5% 50V
C443	1-163-109-00	s	CERAMIC, CHIP 47PF 5% 50V
C444	1-163-251-11	s	CERAMIC, CHIP 100PF 5% 50V
C445	1-164-004-11	s	CERAMIC, CHIP 0.1uF 10% 25V
C446	1-126-101-11	s	ELECT 100uF 20% 16V
C447	1-131-349-00	s	TANTALUM 2.2uF 10% 35V
C448	1-131-349-00	s	TANTALUM 2.2uF 10% 35V
C449	1-164-222-11	s	CERAMIC 0.22uF 25V
C450	1-124-477-11	s	ELECT 47uF 20% 25V
C451	1-164-232-11	s	CERAMIC 0.01uF 10% 100V
C453	1-163-037-11	s	CERAMIC, CHIP 0.022uF 10% 25V
C454	1-124-477-11	s	ELECT 47uF 20% 25V
C455	1-124-477-11	s	ELECT 47uF 20% 25V
C456	1-163-037-11	s	CERAMIC, CHIP 0.022uF 10% 25V
C457	1-124-477-11	s	ELECT 47uF 20% 25V
C458	1-163-037-11	s	CERAMIC, CHIP 0.022uF 10% 25V
C459	1-163-088-00	s	CERAMIC, CHIP 5PF 50V
C460	1-163-102-00	s	CERAMIC, CHIP 24PF 5% 50V
C461	1-163-109-00	s	CERAMIC, CHIP 47PF 5% 50V
C462	1-163-109-00	s	CERAMIC, CHIP 47PF 5% 50V
C463	1-102-074-00	s	CERAMIC 0.001uF 10% 50V
C500	1-163-037-11	s	CERAMIC, CHIP 0.022uF 10% 25V
C501	1-163-037-11	s	CERAMIC, CHIP 0.022uF 10% 25V
C502	1-163-037-11	s	CERAMIC, CHIP 0.022uF 10% 25V
C503	1-163-037-11	s	CERAMIC, CHIP 0.022uF 10% 25V
C504	1-163-037-11	s	CERAMIC, CHIP 0.022uF 10% 25V
C505	1-163-037-11	s	CERAMIC, CHIP 0.022uF 10% 25V
C506	1-163-037-11	s	CERAMIC, CHIP 0.022uF 10% 25V
C507	1-163-037-11	s	CERAMIC, CHIP 0.022uF 10% 25V
C508	1-163-037-11	s	CERAMIC, CHIP 0.022uF 10% 25V
C509	1-163-037-11	s	CERAMIC, CHIP 0.022uF 10% 25V
C510	1-163-037-11	s	CERAMIC, CHIP 0.022uF 10% 25V
C511	1-163-037-11	s	CERAMIC, CHIP 0.022uF 10% 25V
C512	1-163-037-11	s	CERAMIC, CHIP 0.022uF 10% 25V
C513	1-163-037-11	s	CERAMIC, CHIP 0.022uF 10% 25V
C514	1-163-037-11	s	CERAMIC, CHIP 0.022uF 10% 25V
C515	1-163-037-11	s	CERAMIC, CHIP 0.022uF 10% 25V
C516	1-163-037-11	s	CERAMIC, CHIP 0.022uF 10% 25V
C517	1-163-037-11	s	CERAMIC, CHIP 0.022uF 10% 25V
C518	1-163-037-11	s	CERAMIC, CHIP 0.022uF 10% 25V
C519	1-164-004-11	s	CERAMIC, CHIP 0.1uF 10% 25V
C520	1-164-004-11	s	CERAMIC, CHIP 0.1uF 10% 25V
C521	1-163-009-11	s	CERAMIC, CHIP 0.001uF 10% 50V
C522	1-163-009-11	s	CERAMIC, CHIP 0.001uF 10% 50V
C523	1-163-237-11	s	CERAMIC, CHIP 27PF 5% 50V
C524	1-163-037-11	s	CERAMIC, CHIP 0.022uF 10% 25V
C525	1-124-907-11	s	ELECT 10uF 20% 50V
C526	1-163-037-11	s	CERAMIC, CHIP 0.022uF 10% 25V
C527	1-163-037-11	s	CERAMIC, CHIP 0.022uF 10% 25V
C528	1-163-037-11	s	CERAMIC, CHIP 0.022uF 10% 25V
C529	1-124-907-11	s	ELECT 10uF 20% 50V
C530	1-163-037-11	s	CERAMIC, CHIP 0.022uF 10% 25V
C531	1-124-907-11	s	ELECT 10uF 20% 50V

(TBC-17P BOARD)

Ref. No. or Q'ty	Part No.	SP	Description
C532	1-164-004-11	s	CERAMIC, CHIP 0.1uF 10% 25V
C533	1-164-004-11	s	CERAMIC, CHIP 0.1uF 10% 25V
C534	1-163-009-11	s	CERAMIC, CHIP 0.001uF 10% 50V
C535	1-163-009-11	s	CERAMIC, CHIP 0.001uF 10% 50V
C536	1-163-237-11	s	CERAMIC, CHIP 27PF 5% 50V
C537	1-163-037-11	s	CERAMIC, CHIP 0.022uF 10% 25V
C538	1-164-004-11	s	CERAMIC, CHIP 0.1uF 10% 25V
C539	1-124-907-11	s	ELECT 10uF 20% 50V
C540	1-164-004-11	s	CERAMIC, CHIP 0.1uF 10% 25V
C541	1-163-009-11	s	CERAMIC, CHIP 0.001uF 10% 50V
C542	1-163-009-11	s	CERAMIC, CHIP 0.001uF 10% 50V
C543	1-163-237-11	s	CERAMIC, CHIP 27PF 5% 50V
C544	1-163-037-11	s	CERAMIC, CHIP 0.022uF 10% 25V
C545	1-124-903-11	s	ELECT 1uF 20% 50V
C546	1-124-903-11	s	ELECT 1uF 20% 50V
C547	1-164-004-11	s	CERAMIC, CHIP 0.1uF 10% 25V
C548	1-164-004-11	s	CERAMIC, CHIP 0.1uF 10% 25V
C549	1-124-477-11	s	ELECT 47uF 20% 25V
C550	1-163-037-11	s	CERAMIC, CHIP 0.022uF 10% 25V
C551	1-163-037-11	s	CERAMIC, CHIP 0.022uF 10% 25V
C552	1-124-477-11	s	ELECT 47uF 20% 25V
C553	1-124-477-11	s	ELECT 47uF 20% 25V
C554	1-163-037-11	s	CERAMIC, CHIP 0.022uF 10% 25V
C555	1-124-903-11	s	ELECT 1uF 20% 50V
C556	1-124-903-11	s	ELECT 1uF 20% 50V
C557	1-164-004-11	s	CERAMIC, CHIP 0.1uF 10% 25V
C558	1-164-004-11	s	CERAMIC, CHIP 0.1uF 10% 25V
C559	1-124-477-11	s	ELECT 47uF 20% 25V
C560	1-163-037-11	s	CERAMIC, CHIP 0.022uF 10% 25V
C561	1-163-037-11	s	CERAMIC, CHIP 0.022uF 10% 25V
C562	1-124-477-11	s	ELECT 47uF 20% 25V
C563	1-163-037-11	s	CERAMIC, CHIP 0.022uF 10% 25V
C564	1-124-903-11	s	ELECT 1uF 20% 50V
C565	1-124-903-11	s	ELECT 1uF 20% 50V
C566	1-164-004-11	s	CERAMIC, CHIP 0.1uF 10% 25V
C567	1-164-004-11	s	CERAMIC, CHIP 0.1uF 10% 25V
C568	1-124-477-11	s	ELECT 47uF 20% 25V
C569	1-163-037-11	s	CERAMIC, CHIP 0.022uF 10% 25V
C570	1-163-251-11	s	CERAMIC, CHIP 100PF 5% 50V
C571	1-163-086-00	s	CERAMIC, CHIP 3PF 50V
C572	1-163-037-11	s	CERAMIC, CHIP 0.022uF 10% 25V
C573	1-163-037-11	s	CERAMIC, CHIP 0.022uF 10% 25V
C574	1-163-251-11	s	CERAMIC, CHIP 100PF 5% 50V
C575	1-163-251-11	s	CERAMIC, CHIP 100PF 5% 50V
C576	1-163-037-11	s	CERAMIC, CHIP 0.022uF 10% 25V
C577	1-163-809-11	s	CERAMIC, CHIP 0.047uF 10% 25V
C578	1-124-907-11	s	ELECT 10uF 20% 50V
C580	1-163-037-11	s	CERAMIC, CHIP 0.022uF 10% 25V
C581	1-163-037-11	s	CERAMIC, CHIP 0.022uF 10% 25V
C582	1-163-037-11	s	CERAMIC, CHIP 0.022uF 10% 25V
C583	1-131-368-00	s	TANTALUM 3.3uF 10% 16V
C584	1-131-368-00	s	TANTALUM 3.3uF 10% 16V
C585	1-163-037-11	s	CERAMIC, CHIP 0.022uF 10% 25V
C586	1-124-903-11	s	ELECT 1uF 20% 50V
C587	1-124-907-11	s	ELECT 10uF 20% 50V
C588	1-163-037-11	s	CERAMIC, CHIP 0.022uF 10% 25V
C589	1-163-125-00	s	CERAMIC, CHIP 220PF 5% 50V
C590	1-163-235-11	s	CERAMIC, CHIP 22PF 5% 50V
C591	1-124-477-11	s	ELECT 47uF 20% 25V

(TEC-17P BOARD)

Ref. No. or Q'ty	Part No.	SP	Description
C592	1-163-251-11	s	CERAMIC, CHIP 100PF 5% 50V
C593	1-124-477-11	s	ELECT 47uF 20% 25V
C594	1-124-477-11	s	ELECT 47uF 20% 25V
C595	1-163-037-11	s	CERAMIC, CHIP 0.022uF 10% 25V
C596	1-163-037-11	s	CERAMIC, CHIP 0.022uF 10% 25V
C597	1-163-009-11	s	CERAMIC, CHIP 0.001uF 10% 50V
C598	1-163-009-11	s	CERAMIC, CHIP 0.001uF 10% 50V
C599	1-163-037-11	s	CERAMIC, CHIP 0.022uF 10% 25V
C701	1-163-037-11	s	CERAMIC, CHIP 0.022uF 10% 25V
C702	1-124-477-11	s	ELECT 47uF 20% 25V
C703	1-163-037-11	s	CERAMIC, CHIP 0.022uF 10% 25V
C704	1-126-157-11	s	ELECT 10uF 20% 16V
C705	1-102-074-00	s	CERAMIC 0.001uF 10% 50V
C706	1-163-037-11	s	CERAMIC, CHIP 0.022uF 10% 25V
C707	1-163-037-11	s	CERAMIC, CHIP 0.022uF 10% 25V
C708	1-163-105-00	s	CERAMIC, CHIP 33PF 5% 50V
C709	1-163-125-00	s	CERAMIC, CHIP 220PF 5% 50V
C710	1-163-037-11	s	CERAMIC, CHIP 0.022uF 10% 25V
C711	1-163-037-11	s	CERAMIC, CHIP 0.022uF 10% 25V
C712	1-124-477-11	s	ELECT 47uF 20% 25V
C713	1-124-903-11	s	ELECT 1uF 20% 50V
C714	1-163-037-11	s	CERAMIC, CHIP 0.022uF 10% 25V
C715	1-163-037-11	s	CERAMIC, CHIP 0.022uF 10% 25V
C716	1-163-037-11	s	CERAMIC, CHIP 0.022uF 10% 25V
C717	1-163-125-00	s	CERAMIC, CHIP 220PF 5% 50V
C718	1-163-251-11	s	CERAMIC, CHIP 100PF 5% 50V
C719	1-163-235-11	s	CERAMIC, CHIP 22PF 5% 50V
C720	1-124-477-11	s	ELECT 47uF 20% 25V
C721	1-163-037-11	s	CERAMIC, CHIP 0.022uF 10% 25V
C722	1-124-477-11	s	ELECT 47uF 20% 25V
C723	1-163-037-11	s	CERAMIC, CHIP 0.022uF 10% 25V
C737	1-163-037-11	s	CERAMIC, CHIP 0.022uF 10% 25V
C738	1-124-477-11	s	ELECT 47uF 20% 25V
C739	1-163-037-11	s	CERAMIC, CHIP 0.022uF 10% 25V
C740	1-163-037-11	s	CERAMIC, CHIP 0.022uF 10% 25V
C741	1-164-004-11	s	CERAMIC, CHIP 0.1uF 10% 25V
C742	1-124-477-11	s	ELECT 47uF 20% 25V
C743	1-164-004-11	s	CERAMIC, CHIP 0.1uF 10% 25V
C744	1-164-004-11	s	CERAMIC, CHIP 0.1uF 10% 25V
C745	1-163-121-00	s	CERAMIC, CHIP 150PF 5% 50V
C746	1-163-037-11	s	CERAMIC, CHIP 0.022uF 10% 25V
C747	1-163-037-11	s	CERAMIC, CHIP 0.022uF 10% 25V
C748	1-163-009-11	s	CERAMIC, CHIP 0.001uF 10% 50V
C749	1-131-347-00	s	TANTALUM 1uF 10% 35V
C750	1-163-037-11	s	CERAMIC, CHIP 0.022uF 10% 25V
C751	1-163-037-11	s	CERAMIC, CHIP 0.022uF 10% 25V
C752	1-163-037-11	s	CERAMIC, CHIP 0.022uF 10% 25V
C753	1-164-004-11	s	CERAMIC, CHIP 0.1uF 10% 25V
C754	1-131-363-00	s	TANTALUM 4.7uF 10% 20V
C755	1-163-037-11	s	CERAMIC, CHIP 0.022uF 10% 25V
C756	1-163-037-11	s	CERAMIC, CHIP 0.022uF 10% 25V
C757	1-163-037-11	s	CERAMIC, CHIP 0.022uF 10% 25V
C758	1-124-477-11	s	ELECT 47uF 20% 25V
C759	1-163-037-11	s	CERAMIC, CHIP 0.022uF 10% 25V
C760	1-124-477-11	s	ELECT 47uF 20% 25V
C761	1-163-037-11	s	CERAMIC, CHIP 0.022uF 10% 25V
C762	1-163-105-00	s	CERAMIC, CHIP 33PF 5% 50V
C763	1-163-037-11	s	CERAMIC, CHIP 0.022uF 10% 25V
C764	1-163-037-11	s	CERAMIC, CHIP 0.022uF 10% 25V

(TEC-17P BOARD)

Ref. No. or Q'ty	Part No.	SP	Description
C765	1-124-477-11	s	ELECT 47uF 20% 25V
C766	1-163-037-11	s	CERAMIC, CHIP 0.022uF 10% 25V
C767	1-163-037-11	s	CERAMIC, CHIP 0.022uF 10% 25V
C768	1-163-037-11	s	CERAMIC, CHIP 0.022uF 10% 25V
C769	1-163-037-11	s	CERAMIC, CHIP 0.022uF 10% 25V
C770	1-163-037-11	s	CERAMIC, CHIP 0.022uF 10% 25V
C771	1-163-037-11	s	CERAMIC, CHIP 0.022uF 10% 25V
C772	1-130-489-00	s	MYLAR 0.033uF 5% 50V
C773	1-163-037-11	s	CERAMIC, CHIP 0.022uF 10% 25V
C774	1-163-037-11	s	CERAMIC, CHIP 0.022uF 10% 25V
C775	1-163-037-11	s	CERAMIC, CHIP 0.022uF 10% 25V
C776	1-163-037-11	s	CERAMIC, CHIP 0.022uF 10% 25V
C777	1-164-004-11	s	CERAMIC, CHIP 0.1uF 10% 25V
C778	1-164-004-11	s	CERAMIC, CHIP 0.1uF 10% 25V
C779	1-163-037-11	s	CERAMIC, CHIP 0.022uF 10% 25V
C780	1-126-233-11	s	ELECT 22uF 20% 50V
C781	1-126-233-11	s	ELECT 22uF 20% 50V
C782	1-163-251-11	s	CERAMIC, CHIP 100PF 5% 50V
C783	1-164-004-11	s	CERAMIC, CHIP 0.1uF 10% 25V
C784	1-164-004-11	s	CERAMIC, CHIP 0.1uF 10% 25V
C785	1-163-037-11	s	CERAMIC, CHIP 0.022uF 10% 25V
C786	1-163-037-11	s	CERAMIC, CHIP 0.022uF 10% 25V
C787	1-163-037-11	s	CERAMIC, CHIP 0.022uF 10% 25V
C788	1-163-037-11	s	CERAMIC, CHIP 0.022uF 10% 25V
C789	1-124-477-11	s	ELECT 47uF 20% 25V
C790	1-124-477-11	s	ELECT 47uF 20% 25V
C791	1-163-037-11	s	CERAMIC, CHIP 0.022uF 10% 25V
C792	1-163-037-11	s	CERAMIC, CHIP 0.022uF 10% 25V
C793	1-124-477-11	s	ELECT 47uF 20% 25V
C794	1-163-037-11	s	CERAMIC, CHIP 0.022uF 10% 25V
C795	1-124-477-11	s	ELECT 47uF 20% 25V
C796	1-163-037-11	s	CERAMIC, CHIP 0.022uF 10% 25V
C797	1-163-037-11	s	CERAMIC, CHIP 0.022uF 10% 25V
C798	1-163-037-11	s	CERAMIC, CHIP 0.022uF 10% 25V
C800	1-124-903-11	s	ELECT 1uF 20% 50V
CF701	1-527-497-00	s	FILTER, CERAMIC 4.55MHz
CN136	1-573-600-21	s	CONNECTOR, PHEC 100P, MALE
CN137	1-573-600-21	s	CONNECTOR, PHEC 100P, MALE
CN138	1-573-600-21	s	CONNECTOR, PHEC 100P, MALE
CP700	1-577-295-11	s	VCO, CRYSTAL 17.734475MHz
CP701	1-577-597-11	s	VCO, CRYSTAL 27.000MHz
D100	8-719-106-17	s	DIODE RD6.8M-B2
D101	8-719-941-23	s	DIODE DA204U
D200	8-719-106-17	s	DIODE RD6.8M-B2
D201	8-719-941-23	s	DIODE DA204U
D301	8-719-123-82	s	DIODE 1SS303-T1
D302	8-719-941-23	s	DIODE DA204U
D303	8-719-941-23	s	DIODE DA204U
D304	8-719-915-30	s	DIODE, VARICAP FC53M
D305	8-719-915-30	s	DIODE, VARICAP FC53M
D307	8-719-123-82	s	DIODE 1SS303-T1
D308	8-719-109-63	s	DIODE RD3.0E-B
D401	8-719-123-82	s	DIODE 1SS303-T1
D402	8-719-941-23	s	DIODE DA204U
D404	8-719-941-23	s	DIODE DA204U
D405	8-719-915-30	s	DIODE, VARICAP FC53M
D406	8-719-915-30	s	DIODE, VARICAP FC53M

(TBC-17P BOARD)

Ref. No. or Q'ty	Part No.	SP	Description
D407	8-719-123-82	s	DIODE 1SS303-T1
D408	8-719-109-63	s	DIODE RD3.0E-B
D500	8-719-915-43	s	DIODE, VARICAP FC54M
D501	8-719-105-58	s	DIODE RD3.9M-B2
D502	8-719-915-43	s	DIODE, VARICAP FC54M
D503	8-719-915-43	s	DIODE, VARICAP FC54M
D504	8-719-105-58	s	DIODE RD3.9M-B2
D505	8-719-105-28	s	DIODE RD2.4M-B
D506	8-719-105-40	s	DIODE RD3.0M-B2
D507	8-719-105-40	s	DIODE RD3.0M-B2
D508	8-719-123-82	s	DIODE 1SS303-T1
D509	8-719-123-85	s	DIODE 1SS304
D510	8-719-123-82	s	DIODE 1SS303-T1
D511	8-719-123-82	s	DIODE 1SS303-T1
D512	8-719-123-82	s	DIODE 1SS303-T1
D513	8-719-123-85	s	DIODE 1SS304
D514	8-719-123-82	s	DIODE 1SS303-T1
D515	8-719-123-82	s	DIODE 1SS303-T1
D516	8-719-123-82	s	DIODE 1SS303-T1
D700	8-719-123-82	s	DIODE 1SS303-T1
D701	8-719-105-52	s	DIODE RD3.6M-B2
D702	8-719-123-82	s	DIODE 1SS303-T1
D703	8-719-941-23	s	DIODE DA204U
D704	8-719-123-82	s	DIODE 1SS303-T1
D705	8-719-123-82	s	DIODE 1SS303-T1
D706	8-719-123-82	s	DIODE 1SS303-T1
FB100	1-535-180-00	s	BEAD, FERRITE
FB200	1-535-180-00	s	BEAD, FERRITE
FL100	1-239-163-11	s	FILTER, LOW-PASS
FL200	1-239-162-11	s	FILTER, LOW-PASS
FL500	1-239-134-11	s	FILTER, LOW-PASS
FL501	1-239-136-11	s	FILTER, LOW-PASS
FL502	1-239-136-11	s	FILTER, LOW-PASS
FL700	1-239-165-11	s	FILTER, LOW-PASS
IC1	8-759-982-31	s	IC RC78M05FA
IC2	8-759-982-31	s	IC RC78M05FA
IC3	8-759-982-31	s	IC RC78M05FA
IC13	8-752-306-51	s	IC CX23065A
IC100	8-752-052-76	s	IC CXA1480Q
IC101	1-809-333-11	s	IC H8D7151
IC102	8-759-908-17	s	IC TL082CPS
IC103	8-752-334-55	s	IC CXD1175M
IC104	8-759-300-71	s	IC HD14053BFP
IC105	8-759-300-71	s	IC HD14053BFP
IC150	8-759-100-95	s	IC UPC324G2
IC151	8-759-100-95	s	IC UPC324G2
IC152	8-759-908-15	s	IC TL431CLP
IC153	8-759-702-08	s	IC NJM360M
IC200	8-752-052-76	s	IC CXA1480Q
IC201	1-809-333-11	s	IC H8D7151
IC202	8-759-908-92	s	IC TL084CNS
IC203	8-752-334-55	s	IC CXD1175M
IC300	8-752-339-03	s	IC CXD2207Q
IC301	8-759-908-17	s	IC TL082CPS
IC302	8-759-030-74	s	IC SC14S86F
IC303	8-759-973-82	s	IC TLC5491PS
IC304	8-759-711-52	s	IC NJU8001M

(TBC-17P BOARD)

Ref. No. or Q'ty	Part No.	SP	Description
IC305	8-759-981-92	s	IC RC4558M
IC309	8-759-981-92	s	IC RC4558M
IC310	8-759-981-92	s	IC RC4558M
IC311	8-759-907-81	s	IC SN74LS221NS
IC312	8-759-941-17	s	IC SN74LS06NS
IC313	8-759-991-85	s	IC 74F00SJ
IC400	8-759-908-17	s	IC TL082CPS
IC401	8-759-030-74	s	IC SC14S86F
IC402	8-759-973-82	s	IC TLC5491PS
IC403	8-759-711-52	s	IC NJU8001M
IC404	8-759-981-92	s	IC RC4558M
IC406	8-759-030-74	s	IC SC14S86F
IC407	8-752-339-03	s	IC CXD2207Q
IC408	8-759-907-81	s	IC SN74LS221NS
IC409	8-759-941-17	s	IC SN74LS06NS
IC410	8-759-991-85	s	IC 74F00SJ
IC411	8-759-981-92	s	IC RC4558M
IC412	8-759-981-92	s	IC RC4558M
IC500	8-759-926-52	s	IC SN74HC257ANS
IC501	8-759-513-77	s	IC CXD8152Q
IC502	8-759-513-77	s	IC CXD8152Q
IC503	8-752-337-41	s	IC CXK1206M
IC504	8-752-337-41	s	IC CXK1206M
IC505	8-752-337-41	s	IC CXK1206M
IC506	8-752-337-41	s	IC CXK1206M
IC507	8-752-341-30	s	IC CXD2210Q
IC508	8-752-341-30	s	IC CXD2210Q
IC509	8-752-341-32	s	IC CXD2209Q
IC510	8-759-513-78	s	IC CXD8160Q
IC511	8-759-043-37	s	IC CXD8166Q
IC512	8-759-981-92	s	IC RC4558M
IC513	8-759-981-92	s	IC RC4558M
IC514	8-759-421-09	s	IC MN6557AS
IC515	8-759-421-09	s	IC MN6557AS
IC516	8-759-421-09	s	IC MN6557AS
IC517	8-759-908-15	s	IC TL431CLP
IC518	8-759-702-08	s	IC NJM360M
IC519	8-759-239-23	s	IC TC74HC86AF
IC521	8-759-971-95	s	IC LM317LZ
IC522	8-759-908-17	s	IC TL082CPS
IC523	8-759-100-93	s	IC UPC393G2
IC524	8-759-206-28	s	IC TC74HC123F
IC525	8-759-008-67	s	IC MC14066BF
IC526	8-759-925-72	s	IC SN74HC02NS
IC527	8-759-925-90	s	IC SN74HC74NS
IC528	8-759-926-24	s	IC SN74HC164NS
IC529	8-759-926-85	s	IC SN74HC32NS
IC701	8-759-300-71	s	IC HD14053BFP
IC702	8-759-908-17	s	IC TL082CPS
IC703	8-759-105-49	s	IC UPC319G2
IC704	8-759-702-08	s	IC NJM360M
IC705	8-759-925-72	s	IC SN74HC02NS
IC706	8-759-702-08	s	IC NJM360M
IC707	8-759-925-90	s	IC SN74HC74NS
IC709	8-759-908-15	s	IC TL431CLP
IC710	8-759-981-92	s	IC RC4558M
IC711	8-759-206-28	s	IC TC74HC123F
IC712	8-752-306-51	s	IC CX23065A
IC713	8-752-335-47	s	IC CXD1216M

(TBC-17P BOARD)

Ref. No. or Q'ty	Part No.	SP	Description
IC714	8-759-206-28	S	IC TC74HC123F
IC715	8-759-808-15	S	IC TL431CLP
IC716	8-759-099-05	S	IC MC14051BF
IC717	8-759-981-92	S	IC RC4558M
IC718	8-759-908-17	S	IC TL082CPS
IC719	8-759-300-71	S	IC HD14053BFP
IC720	8-759-980-04	S	IC LM311PS
IC721	8-759-926-18	S	IC SN74HC157NS
IC722	8-759-041-53	S	IC MC68HC05M4-SC406682
IC723	8-759-925-90	S	IC SN74HC74NS
IC724	8-759-519-49	S	IC CXD8165Q
IC725	8-752-334-64	S	IC CXD1171M
IC726	8-752-334-64	S	IC CXD1171M
IC727	8-759-948-01	S	IC 74F04SJ
IC728	8-759-926-35	S	IC SN74HC191NS
IC729	8-759-927-46	S	IC SN74HC00NS
IC730	8-759-702-08	S	IC NJM360M
IC731	8-759-300-71	S	IC HD14053BFP
IC732	8-759-925-90	S	IC SN74HC74NS
IC733	8-759-300-71	S	IC HD14053BFP
L1	1-412-533-11	S	INDUCTOR 47uH
L2	1-412-533-11	S	INDUCTOR 47uH
L3	1-412-533-11	S	INDUCTOR 47uH
L100	1-408-413-00	S	INDUCTOR 22uH
L101	1-408-413-00	S	INDUCTOR 22uH
L102	1-408-413-00	S	INDUCTOR 22uH
L150	1-408-419-00	S	INDUCTOR 68uH
L200	1-408-413-00	S	INDUCTOR 22uH
L201	1-408-413-00	S	INDUCTOR 22uH
L202	1-408-413-00	S	INDUCTOR 22uH
L300	1-408-427-00	S	INDUCTOR 330uH
L301	1-410-482-11	S	INDUCTOR 680uH
L302	1-410-478-11	S	INDUCTOR 47uH
L303	1-410-478-11	S	INDUCTOR 47uH
L304	1-410-478-11	S	INDUCTOR 47uH
L305	1-408-419-00	S	INDUCTOR 68uH
L306	1-410-478-11	S	INDUCTOR 47uH
L307	1-410-478-11	S	INDUCTOR 47uH
L400	1-410-478-11	S	INDUCTOR 47uH
L401	1-410-482-31	S	INDUCTOR 100uH
L402	1-408-425-00	S	INDUCTOR 220uH
L403	1-410-478-11	S	INDUCTOR 47uH
L404	1-410-478-11	S	INDUCTOR 47uH
L405	1-408-416-00	S	INDUCTOR 39uH
L406	1-410-478-11	S	INDUCTOR 47uH
L407	1-410-478-11	S	INDUCTOR 47uH
L408	1-408-411-00	S	INDUCTOR 15uH
L409	1-410-476-11	S	INDUCTOR 33uH
L500	1-408-413-00	S	INDUCTOR 22uH
L501	1-408-413-00	S	INDUCTOR 22uH
L502	1-408-413-00	S	INDUCTOR 22uH
L503	1-408-419-00	S	INDUCTOR 68uH
L504	1-408-413-00	S	INDUCTOR 22uH
L505	1-408-413-00	S	INDUCTOR 22uH
L700	1-410-482-31	S	INDUCTOR 100uH
L701	1-410-478-11	S	INDUCTOR 47uH
L702	1-408-419-00	S	INDUCTOR 68uH
L703	1-410-478-11	S	INDUCTOR 47uH
L704	1-410-478-11	S	INDUCTOR 47uH

(TBC-17P BOARD)

Ref. No. or Q'ty	Part No.	SP	Description
L706	1-410-478-11	S	INDUCTOR 47uH
L707	1-410-478-11	S	INDUCTOR 47uH
L708	1-410-478-11	S	INDUCTOR 47uH
L710	1-410-478-11	S	INDUCTOR 47uH
L713	1-410-478-11	S	INDUCTOR 47uH
L714	1-410-478-11	S	INDUCTOR 47uH
L715	1-410-478-11	S	INDUCTOR 47uH
L716	1-410-478-11	S	INDUCTOR 47uH
LV300	1-407-569-00	S	COIL, VAR 10UH
LV400	1-407-569-00	S	COIL, VAR 10UH
Q100	8-729-140-63	S	TRANSISTOR 2SA1611-M5M6
Q101	8-729-117-32	S	TRANSISTOR 2SC4177
Q102	8-729-903-82	S	TRANSISTOR PMW2
Q200	8-729-140-63	S	TRANSISTOR 2SA1611-M5M6
Q201	8-729-117-32	S	TRANSISTOR 2SC4177
Q202	8-729-903-82	S	TRANSISTOR PMW2
Q300	8-729-117-32	S	TRANSISTOR 2SC4177
Q301	8-729-117-32	S	TRANSISTOR 2SC4177
Q302	8-729-117-32	S	TRANSISTOR 2SC4177
Q304	8-729-140-63	S	TRANSISTOR 2SA1611-M5M6
Q305	8-729-117-32	S	TRANSISTOR 2SC4177
Q400	8-729-117-32	S	TRANSISTOR 2SC4177
Q401	8-729-117-32	S	TRANSISTOR 2SC4177
Q402	8-729-117-32	S	TRANSISTOR 2SC4177
Q403	8-729-140-63	S	TRANSISTOR 2SA1611-M5M6
Q405	8-729-117-32	S	TRANSISTOR 2SC4177
Q500	8-729-117-32	S	TRANSISTOR 2SC4177
Q501	8-729-118-58	S	TRANSISTOR 2SK852-X4
Q502	8-729-117-32	S	TRANSISTOR 2SC4177
Q503	8-729-117-32	S	TRANSISTOR 2SC4177
Q504	8-729-117-32	S	TRANSISTOR 2SC4177
Q505	8-729-118-58	S	TRANSISTOR 2SK852-X4
Q506	8-729-117-32	S	TRANSISTOR 2SC4177
Q508	8-729-117-32	S	TRANSISTOR 2SC4177
Q509	8-729-118-58	S	TRANSISTOR 2SK852-X4
Q510	8-729-117-32	S	TRANSISTOR 2SC4177
Q512	8-729-108-68	S	TRANSISTOR 2SC1815A-GP
Q513	8-729-905-18	S	TRANSISTOR DTC144EU
Q703	8-729-118-56	S	TRANSISTOR 2SK852-X2
Q704	8-729-118-56	S	TRANSISTOR 2SK852-X2
Q705	8-729-117-32	S	TRANSISTOR 2SC4177
Q706	8-729-117-32	S	TRANSISTOR 2SC4177
Q716	8-729-117-32	S	TRANSISTOR 2SC4177
Q717	8-729-117-32	S	TRANSISTOR 2SC4177
Q718	8-729-117-32	S	TRANSISTOR 2SC4177
R100	1-216-636-11	S	METAL, CHIP 300 0.5% 1/10W
R101	1-216-045-00	S	METAL, CHIP 680 5% 1/10W
R102	1-216-639-11	S	METAL, CHIP 330 0.5% 1/10W
R103	1-216-639-11	S	METAL, CHIP 330 0.5% 1/10W
R104	1-216-049-00	S	METAL, CHIP 1K 5% 1/10W
R105	1-216-057-00	S	METAL, CHIP 2.2K 5% 1/10W
R106	1-216-025-00	S	METAL, CHIP 100 5% 1/10W
R107	1-216-037-00	S	METAL, CHIP 330 5% 1/10W
R108	1-216-667-11	S	METAL, CHIP 4.7K 0.5% 1/10W
R109	1-216-667-11	S	METAL, CHIP 4.7K 0.5% 1/10W
R110	1-216-662-11	S	METAL, CHIP 3K 0.5% 1/10W
R111	1-216-679-11	S	METAL, CHIP 15K 0.5% 1/10W
R112	1-216-667-11	S	METAL, CHIP 4.7K 0.5% 1/10W

(TBC-17P BOARD)

Ref. No. or Q'ty	Part No.	SP	Description
R113	1-216-065-00	s	METAL, CHIP 4.7K 5% 1/10W
R114	1-216-045-00	s	METAL, CHIP 680 5% 1/10W
R115	1-216-651-11	s	METAL, CHIP 1K 0.5% 1/10W
R117	1-216-651-11	s	METAL, CHIP 1K 0.5% 1/10W
R118	1-216-073-00	s	METAL, CHIP 10K 5% 1/10W
R119	1-216-073-00	s	METAL, CHIP 10K 5% 1/10W
R120	1-216-667-11	s	METAL, CHIP 4.7K 0.5% 1/10W
R121	1-216-653-11	s	METAL, CHIP 1.2K 0.5% 1/10W
R122	1-216-667-11	s	METAL, CHIP 4.7K 0.5% 1/10W
R123	1-216-041-00	s	METAL, CHIP 470 5% 1/10W
R124	1-216-691-11	s	METAL, CHIP 47K 0.5% 1/10W
R125	1-216-699-11	s	METAL, CHIP 100K 0.5% 1/10W
R126	1-216-648-11	s	METAL, CHIP 750 0.5% 1/10W
R127	1-216-121-00	s	METAL, CHIP 1M 5% 1/10W
R128	1-216-097-00	s	METAL, CHIP 100K 5% 1/10W
R129	1-216-061-00	s	METAL, CHIP 3.3K 5% 1/10W
R130	1-216-673-11	s	METAL, CHIP 8.2K 0.5% 1/10W
R132	1-216-059-00	s	METAL, CHIP 2.7K 5% 1/10W
R133	1-216-017-00	s	METAL, CHIP 47 5% 1/10W
R134	1-216-025-00	s	METAL, CHIP 100 5% 1/10W
R135	1-216-053-00	s	METAL, CHIP 1.5K 5% 1/10W
R150	1-216-683-11	s	METAL, CHIP 22K 0.5% 1/10W
R151	1-216-667-11	s	METAL, CHIP 4.7K 0.5% 1/10W
R152	1-216-667-11	s	METAL, CHIP 4.7K 0.5% 1/10W
R153	1-216-673-11	s	METAL, CHIP 8.2K 0.5% 1/10W
R154	1-216-667-11	s	METAL, CHIP 4.7K 0.5% 1/10W
R156	1-216-683-11	s	METAL, CHIP 22K 0.5% 1/10W
R156	1-216-667-11	s	METAL, CHIP 4.7K 0.5% 1/10W
R157	1-216-667-11	s	METAL, CHIP 4.7K 0.5% 1/10W
R158	1-216-667-11	s	METAL, CHIP 4.7K 0.5% 1/10W
R159	1-216-673-11	s	METAL, CHIP 8.2K 0.5% 1/10W
R160	1-216-667-11	s	METAL, CHIP 4.7K 0.5% 1/10W
R161	1-216-679-11	s	METAL, CHIP 15K 0.5% 1/10W
R162	1-216-659-11	s	METAL, CHIP 2.2K 0.5% 1/10W
R163	1-216-675-11	s	METAL, CHIP 10K 0.5% 1/10W
R164	1-216-677-11	s	METAL, CHIP 12K 0.5% 1/10W
R165	1-216-667-11	s	METAL, CHIP 4.7K 0.5% 1/10W
R168	1-216-667-11	s	METAL, CHIP 4.7K 0.5% 1/10W
R169	1-216-659-11	s	METAL, CHIP 2.2K 0.5% 1/10W
R170	1-216-667-11	s	METAL, CHIP 4.7K 0.5% 1/10W
R171	1-216-025-00	s	METAL, CHIP 100 5% 1/10W
R172	1-216-049-00	s	METAL, CHIP 1K 5% 1/10W
R173	1-216-049-00	s	METAL, CHIP 1K 5% 1/10W
R174	1-216-695-11	s	METAL, CHIP 68K 0.5% 1/10W
R200	1-216-638-11	s	METAL, CHIP 300 0.5% 1/10W
R201	1-216-045-00	s	METAL, CHIP 680 5% 1/10W
R202	1-216-639-11	s	METAL, CHIP 330 0.5% 1/10W
R203	1-216-639-11	s	METAL, CHIP 330 0.5% 1/10W
R204	1-216-049-00	s	METAL, CHIP 1K 5% 1/10W
R205	1-216-057-00	s	METAL, CHIP 2.2K 5% 1/10W
R206	1-216-025-00	s	METAL, CHIP 100 5% 1/10W
R207	1-216-037-00	s	METAL, CHIP 330 5% 1/10W
R208	1-216-667-11	s	METAL, CHIP 4.7K 0.5% 1/10W
R209	1-216-667-11	s	METAL, CHIP 4.7K 0.5% 1/10W
R210	1-216-662-11	s	METAL, CHIP 3K 0.5% 1/10W
R211	1-216-679-11	s	METAL, CHIP 15K 0.5% 1/10W
R212	1-216-667-11	s	METAL, CHIP 4.7K 0.5% 1/10W
R213	1-216-065-00	s	METAL, CHIP 4.7K 5% 1/10W
R214	1-216-045-00	s	METAL, CHIP 680 5% 1/10W

(TBC-17P BOARD)

Ref. No. or Q'ty	Part No.	SP	Description
R215	1-216-651-11	s	METAL, CHIP 1K 0.5% 1/10W
R217	1-216-651-11	s	METAL, CHIP 1K 0.5% 1/10W
R218	1-216-073-00	s	METAL, CHIP 10K 5% 1/10W
R219	1-216-073-00	s	METAL, CHIP 10K 5% 1/10W
R220	1-216-667-11	s	METAL, CHIP 4.7K 0.5% 1/10W
R221	1-216-653-11	s	METAL, CHIP 1.2K 0.5% 1/10W
R222	1-216-667-11	s	METAL, CHIP 4.7K 0.5% 1/10W
R223	1-216-041-00	s	METAL, CHIP 470 5% 1/10W
R224	1-216-691-11	s	METAL, CHIP 47K 0.5% 1/10W
R225	1-216-699-11	s	METAL, CHIP 100K 0.5% 1/10W
R226	1-216-648-11	s	METAL, CHIP 750 0.5% 1/10W
R227	1-216-121-00	s	METAL, CHIP 1M 5% 1/10W
R228	1-216-097-00	s	METAL, CHIP 100K 5% 1/10W
R229	1-216-061-00	s	METAL, CHIP 3.3K 5% 1/10W
R230	1-216-673-11	s	METAL, CHIP 8.2K 0.5% 1/10W
R231	1-216-017-00	s	METAL, CHIP 47 5% 1/10W
R232	1-216-025-00	s	METAL, CHIP 100 5% 1/10W
R233	1-216-053-00	s	METAL, CHIP 1.5K 5% 1/10W
R234	1-216-085-00	s	METAL, CHIP 33K 5% 1/10W
R235	1-216-073-00	s	METAL, CHIP 10K 5% 1/10W
R236	1-216-065-00	s	METAL, CHIP 4.7K 5% 1/10W
R237	1-216-121-00	s	METAL, CHIP 1M 5% 1/10W
R300	1-216-651-11	s	METAL, CHIP 1K 0.5% 1/10W
R301	1-216-073-00	s	METAL, CHIP 10K 5% 1/10W
R302	1-216-081-00	s	METAL, CHIP 22K 5% 1/10W
R303	1-216-065-00	s	METAL, CHIP 4.7K 5% 1/10W
R304	1-216-017-00	s	METAL, CHIP 47 5% 1/10W
R305	1-216-049-00	s	METAL, CHIP 1K 5% 1/10W
R306	1-216-653-11	s	METAL, CHIP 1.2K 0.5% 1/10W
R307	1-216-025-00	s	METAL, CHIP 100 5% 1/10W
R308	1-216-057-00	s	METAL, CHIP 2.2K 5% 1/10W
R309	1-216-033-00	s	METAL, CHIP 220 5% 1/10W
R310	1-216-057-00	s	METAL, CHIP 2.2K 5% 1/10W
R311	1-216-057-00	s	METAL, CHIP 2.2K 5% 1/10W
R312	1-216-073-00	s	METAL, CHIP 10K 5% 1/10W
R313	1-216-053-00	s	METAL, CHIP 1.5K 5% 1/10W
R314	1-216-053-00	s	METAL, CHIP 1.5K 5% 1/10W
R315	1-216-073-00	s	METAL, CHIP 10K 5% 1/10W
R316	1-216-085-00	s	METAL, CHIP 33K 5% 1/10W
R317	1-216-085-00	s	METAL, CHIP 33K 5% 1/10W
R318	1-216-085-00	s	METAL, CHIP 33K 5% 1/10W
R319	1-216-073-00	s	METAL, CHIP 10K 5% 1/10W
R320	1-216-081-00	s	METAL, CHIP 22K 5% 1/10W
R321	1-216-683-11	s	METAL, CHIP 22K 0.5% 1/10W
R324	1-216-057-00	s	METAL, CHIP 2.2K 5% 1/10W
R325	1-216-097-00	s	METAL, CHIP 100K 5% 1/10W
R326	1-216-675-11	s	METAL, CHIP 10K 0.5% 1/10W
R327	1-216-675-11	s	METAL, CHIP 10K 0.5% 1/10W
R328	1-216-097-00	s	METAL, CHIP 100K 5% 1/10W
R329	1-216-073-00	s	METAL, CHIP 10K 5% 1/10W
R330	1-216-049-00	s	METAL, CHIP 1K 5% 1/10W
R331	1-216-041-00	s	METAL, CHIP 470 5% 1/10W
R333	1-216-065-00	s	METAL, CHIP 4.7K 5% 1/10W
R334	1-216-117-00	s	METAL 680K 5% 1/10W
R335	1-216-661-11	s	METAL, CHIP 2.7K 0.5% 1/10W
R336	1-216-627-11	s	METAL, CHIP 100 0.5% 1/10W
R337	1-216-659-11	s	METAL, CHIP 2.2K 0.5% 1/10W
R338	1-216-675-11	s	METAL, CHIP 10K 0.5% 1/10W
R339	1-216-675-11	s	METAL, CHIP 10K 0.5% 1/10W

(TBC-17P BOARD)

Ref. No. or Q'ty	Part No.	SP	Description
R340	1-216-121-00	s	METAL, CHIP 1M 5% 1/10W
R341	1-216-871-11	s	METAL, CHIP 6.8K 0.5% 1/10W
R342	1-216-873-00	s	METAL, CHIP 10K 5% 1/10W
R343	1-216-675-11	s	METAL, CHIP 10K 0.5% 1/10W
R344	1-216-675-11	s	METAL, CHIP 10K 0.5% 1/10W
R345	1-216-675-11	s	METAL, CHIP 10K 0.5% 1/10W
R346	1-216-677-11	s	METAL, CHIP 12K 0.5% 1/10W
R347	1-216-678-11	s	METAL, CHIP 13K 0.5% 1/10W
R348	1-216-871-11	s	METAL, CHIP 6.8K 0.5% 1/10W
R349	1-216-675-11	s	METAL, CHIP 10K 0.5% 1/10W
R350	1-216-057-00	s	METAL, CHIP 2.2K 5% 1/10W
R351	1-216-675-11	s	METAL, CHIP 10K 0.5% 1/10W
R352	1-216-073-00	s	METAL, CHIP 10K 5% 1/10W
R353	1-216-065-00	s	METAL, CHIP 4.7K 5% 1/10W
R354	1-216-065-00	s	METAL, CHIP 4.7K 5% 1/10W
R355	1-216-065-00	s	METAL, CHIP 4.7K 5% 1/10W
R356	1-216-059-00	s	METAL, CHIP 2.7K 5% 1/10W
R358	1-216-665-11	s	METAL, CHIP 3.9K 0.5% 1/10W
R359	1-216-081-00	s	METAL, CHIP 22K 5% 1/10W
R360	1-216-057-00	s	METAL, CHIP 2.2K 5% 1/10W
R361	1-216-057-00	s	METAL, CHIP 2.2K 5% 1/10W
R362	1-216-097-00	s	METAL, CHIP 100K 5% 1/10W
R363	1-216-057-00	s	METAL, CHIP 2.2K 5% 1/10W
R364	1-216-057-00	s	METAL, CHIP 2.2K 5% 1/10W
R365	1-216-057-00	s	METAL, CHIP 2.2K 5% 1/10W
R366	1-216-061-00	s	METAL, CHIP 3.3K 5% 1/10W
R367	1-216-061-00	s	METAL, CHIP 3.3K 5% 1/10W
R368	1-216-109-00	s	METAL, CHIP 330K 5% 1/10W
R369	1-216-057-00	s	METAL, CHIP 2.2K 5% 1/10W
R370	1-216-085-00	s	METAL, CHIP 33K 5% 1/10W
R371	1-216-025-00	s	METAL, CHIP 100 5% 1/10W
R372	1-216-675-11	s	METAL, CHIP 10K 0.5% 1/10W
R373	1-216-675-11	s	METAL, CHIP 10K 0.5% 1/10W
R374	1-216-049-00	s	METAL, CHIP 1K 5% 1/10W
R375	1-216-089-00	s	METAL, CHIP 47K 5% 1/10W
R376	1-249-411-11	s	CARBON 330 5% 1/4W
R377	1-216-073-00	s	METAL, CHIP 10K 5% 1/10W
R378	1-216-041-00	s	METAL, CHIP 470 5% 1/10W
R379	1-216-041-00	s	METAL, CHIP 470 5% 1/10W
R380	1-216-057-00	s	METAL, CHIP 2.2K 5% 1/10W
R381	1-216-053-00	s	METAL, CHIP 1.5K 5% 1/10W
R382	1-216-025-00	s	METAL, CHIP 100 5% 1/10W
R383	1-216-065-00	s	METAL, CHIP 4.7K 5% 1/10W
R384	1-216-049-00	s	METAL, CHIP 1K 5% 1/10W
R385	1-216-081-00	s	METAL, CHIP 22K 5% 1/10W
R386	1-216-033-00	s	METAL, CHIP 220 5% 1/10W
R387	1-216-033-00	s	METAL, CHIP 220 5% 1/10W
R388	1-216-033-00	s	METAL, CHIP 220 5% 1/10W
R390	1-216-049-00	s	METAL, CHIP 1K 5% 1/10W
R391	1-249-413-11	s	CARBON 470 5% 1/4W
R401	1-216-065-00	s	METAL, CHIP 4.7K 5% 1/10W
R402	1-216-081-00	s	METAL, CHIP 22K 5% 1/10W
R403	1-216-073-00	s	METAL, CHIP 10K 5% 1/10W
R404	1-216-017-00	s	METAL, CHIP 47 5% 1/10W
R405	1-216-057-00	s	METAL, CHIP 2.2K 5% 1/10W
R406	1-216-033-00	s	METAL, CHIP 220 5% 1/10W
R407	1-216-057-00	s	METAL, CHIP 2.2K 5% 1/10W
R408	1-216-651-11	s	METAL, CHIP 1K 0.5% 1/10W
R409	1-216-025-00	s	METAL, CHIP 100 5% 1/10W

(TBC-17P BOARD)

Ref. No. or Q'ty	Part No.	SP	Description
R410	1-216-651-11	s	METAL, CHIP 1K 0.5% 1/10W
R413	1-216-057-00	s	METAL, CHIP 2.2K 5% 1/10W
R414	1-216-073-00	s	METAL, CHIP 10K 5% 1/10W
R415	1-216-053-00	s	METAL, CHIP 1.5K 5% 1/10W
R416	1-216-053-00	s	METAL, CHIP 1.5K 5% 1/10W
R417	1-216-073-00	s	METAL, CHIP 10K 5% 1/10W
R418	1-216-085-00	s	METAL, CHIP 33K 5% 1/10W
R419	1-216-085-00	s	METAL, CHIP 33K 5% 1/10W
R420	1-216-085-00	s	METAL, CHIP 33K 5% 1/10W
R421	1-216-073-00	s	METAL, CHIP 10K 5% 1/10W
R422	1-216-081-00	s	METAL, CHIP 22K 5% 1/10W
R423	1-216-683-11	s	METAL, CHIP 22K 0.5% 1/10W
R426	1-216-097-00	s	METAL, CHIP 100K 5% 1/10W
R427	1-216-675-11	s	METAL, CHIP 10K 0.5% 1/10W
R428	1-216-675-11	s	METAL, CHIP 10K 0.5% 1/10W
R429	1-216-097-00	s	METAL, CHIP 100K 5% 1/10W
R430	1-216-073-00	s	METAL, CHIP 10K 5% 1/10W
R431	1-216-089-00	s	METAL, CHIP 47K 5% 1/10W
R432	1-216-049-00	s	METAL, CHIP 1K 5% 1/10W
R433	1-216-073-00	s	METAL, CHIP 10K 5% 1/10W
R434	1-216-073-00	s	METAL, CHIP 10K 5% 1/10W
R435	1-216-675-11	s	METAL, CHIP 10K 0.5% 1/10W
R436	1-216-667-11	s	METAL, CHIP 4.7K 0.5% 1/10W
R437	1-216-675-11	s	METAL, CHIP 10K 0.5% 1/10W
R438	1-216-675-11	s	METAL, CHIP 10K 0.5% 1/10W
R439	1-216-659-11	s	METAL, CHIP 2.2K 0.5% 1/10W
R441	1-216-041-00	s	METAL, CHIP 470 5% 1/10W
R442	1-216-687-11	s	METAL, CHIP 33K 0.5% 1/10W
R443	1-216-683-11	s	METAL, CHIP 22K 0.5% 1/10W
R444	1-216-675-11	s	METAL, CHIP 10K 0.5% 1/10W
R445	1-216-676-11	s	METAL, CHIP 11K 0.5% 1/10W
R446	1-216-065-00	s	METAL, CHIP 4.7K 5% 1/10W
R447	1-216-665-11	s	METAL, CHIP 3.9K 0.5% 1/10W
R448	1-216-117-00	s	METAL 680K 5% 1/10W
R449	1-216-668-11	s	METAL, CHIP 5.1K 0.5% 1/10W
R450	1-216-657-11	s	METAL, CHIP 1.8K 0.5% 1/10W
R451	1-216-631-11	s	METAL, CHIP 150 0.5% 1/10W
R452	1-216-663-11	s	METAL, CHIP 3.3K 0.5% 1/10W
R453	1-216-675-11	s	METAL, CHIP 10K 0.5% 1/10W
R454	1-216-053-00	s	METAL, CHIP 1.5K 5% 1/10W
R455	1-216-675-11	s	METAL, CHIP 10K 0.5% 1/10W
R456	1-216-675-11	s	METAL, CHIP 10K 0.5% 1/10W
R457	1-216-121-00	s	METAL, CHIP 1M 5% 1/10W
R458	1-216-671-11	s	METAL, CHIP 6.8K 0.5% 1/10W
R459	1-216-059-00	s	METAL, CHIP 2.7K 5% 1/10W
R461	1-216-057-00	s	METAL, CHIP 2.2K 5% 1/10W
R462	1-216-081-00	s	METAL, CHIP 22K 5% 1/10W
R463	1-216-665-11	s	METAL, CHIP 3.9K 0.5% 1/10W
R464	1-216-057-00	s	METAL, CHIP 2.2K 5% 1/10W
R465	1-216-097-00	s	METAL, CHIP 100K 5% 1/10W
R466	1-216-057-00	s	METAL, CHIP 2.2K 5% 1/10W
R467	1-216-057-00	s	METAL, CHIP 2.2K 5% 1/10W
R468	1-216-061-00	s	METAL, CHIP 3.3K 5% 1/10W
R469	1-216-109-00	s	METAL, CHIP 330K 5% 1/10W
R470	1-216-057-00	s	METAL, CHIP 2.2K 5% 1/10W
R471	1-216-675-11	s	METAL, CHIP 10K 0.5% 1/10W
R472	1-216-675-11	s	METAL, CHIP 10K 0.5% 1/10W
R473	1-216-073-00	s	METAL, CHIP 10K 5% 1/10W
R474	1-249-411-11	s	CARBON 330 5% 1/4W

(TBC-17P BOARD)

Ref. No. or Q'ty	Part No.	SP	Description
R475	1-216-041-00	s	METAL, CHIP 470 5% 1/10W
R476	1-216-041-00	s	METAL, CHIP 470 5% 1/10W
R477	1-216-057-00	s	METAL, CHIP 2.2K 5% 1/10W
R478	1-216-025-00	s	METAL, CHIP 100 5% 1/10W
R479	1-216-033-00	s	METAL, CHIP 220 5% 1/10W
R480	1-216-033-00	s	METAL, CHIP 220 5% 1/10W
R481	1-216-033-00	s	METAL, CHIP 220 5% 1/10W
R483	1-216-049-00	s	METAL, CHIP 1K 5% 1/10W
R484	1-249-413-11	s	CARBON 470 5% 1/4W
R500	1-216-057-00	s	METAL, CHIP 2.2K 5% 1/10W
R501	1-216-057-00	s	METAL, CHIP 2.2K 5% 1/10W
R502	1-216-057-00	s	METAL, CHIP 2.2K 5% 1/10W
R503	1-216-057-00	s	METAL, CHIP 2.2K 5% 1/10W
R504	1-216-057-00	s	METAL, CHIP 2.2K 5% 1/10W
R505	1-216-049-00	s	METAL, CHIP 1K 5% 1/10W
R506	1-216-057-00	s	METAL, CHIP 2.2K 5% 1/10W
R507	1-216-049-00	s	METAL, CHIP 1K 5% 1/10W
R508	1-216-049-00	s	METAL, CHIP 1K 5% 1/10W
R509	1-216-057-00	s	METAL, CHIP 2.2K 5% 1/10W
R510	1-216-057-00	s	METAL, CHIP 2.2K 5% 1/10W
R511	1-216-057-00	s	METAL, CHIP 2.2K 5% 1/10W
R512	1-216-049-00	s	METAL, CHIP 1K 5% 1/10W
R514	1-216-057-00	s	METAL, CHIP 2.2K 5% 1/10W
R515	1-216-057-00	s	METAL, CHIP 2.2K 5% 1/10W
R519	1-216-295-00	s	METAL, CHIP 0-OHM
R520	1-216-057-00	s	METAL, CHIP 2.2K 5% 1/10W
R521	1-216-057-00	s	METAL, CHIP 2.2K 5% 1/10W
R522	1-216-057-00	s	METAL, CHIP 2.2K 5% 1/10W
R523	1-216-057-00	s	METAL, CHIP 2.2K 5% 1/10W
R524	1-216-057-00	s	METAL, CHIP 2.2K 5% 1/10W
R527	1-216-057-00	s	METAL, CHIP 2.2K 5% 1/10W
R528	1-216-041-00	s	METAL, CHIP 470 5% 1/10W
R529	1-216-041-00	s	METAL, CHIP 470 5% 1/10W
R532	1-216-041-00	s	METAL, CHIP 470 5% 1/10W
R533	1-216-065-00	s	METAL, CHIP 4.7K 5% 1/10W
R535	1-216-655-11	s	METAL, CHIP 1.5K 0.5% 1/10W
R536	1-216-651-11	s	METAL, CHIP 1K 0.5% 1/10W
R537	1-216-073-00	s	METAL, CHIP 10K 5% 1/10W
R538	1-216-073-00	s	METAL, CHIP 10K 5% 1/10W
R539	1-216-121-00	s	METAL, CHIP 1M 5% 1/10W
R540	1-216-085-00	s	METAL, CHIP 33K 5% 1/10W
R541	1-216-085-00	s	METAL, CHIP 33K 5% 1/10W
R542	1-216-121-00	s	METAL, CHIP 1M 5% 1/10W
R543	1-216-033-00	s	METAL, CHIP 220 5% 1/10W
R544	1-216-655-11	s	METAL, CHIP 1.5K 0.5% 1/10W
R545	1-216-651-11	s	METAL, CHIP 1K 0.5% 1/10W
R546	1-216-073-00	s	METAL, CHIP 10K 5% 1/10W
R547	1-216-073-00	s	METAL, CHIP 10K 5% 1/10W
R548	1-216-121-00	s	METAL, CHIP 1M 5% 1/10W
R549	1-216-085-00	s	METAL, CHIP 33K 5% 1/10W
R550	1-216-085-00	s	METAL, CHIP 33K 5% 1/10W
R551	1-216-121-00	s	METAL, CHIP 1M 5% 1/10W
R552	1-216-033-00	s	METAL, CHIP 220 5% 1/10W
R553	1-216-655-11	s	METAL, CHIP 1.5K 0.5% 1/10W
R554	1-216-655-11	s	METAL, CHIP 1.5K 0.5% 1/10W
R555	1-216-073-00	s	METAL, CHIP 10K 5% 1/10W
R556	1-216-073-00	s	METAL, CHIP 10K 5% 1/10W
R557	1-216-121-00	s	METAL, CHIP 1M 5% 1/10W
R558	1-216-081-00	s	METAL, CHIP 22K 5% 1/10W

(TBC-17P BOARD)

Ref. No. or Q'ty	Part No.	SP	Description
R559	1-216-085-00	s	METAL, CHIP 33K 5% 1/10W
R560	1-216-121-00	s	METAL, CHIP 1M 5% 1/10W
R561	1-216-033-00	s	METAL, CHIP 220 5% 1/10W
R562	1-216-651-11	s	METAL, CHIP 1K 0.5% 1/10W
R563	1-216-659-11	s	METAL, CHIP 2.2K 0.5% 1/10W
R564	1-216-660-11	s	METAL, CHIP 2.4K 0.5% 1/10W
R565	1-216-639-11	s	METAL, CHIP 330 0.5% 1/10W
R566	1-216-639-11	s	METAL, CHIP 330 0.5% 1/10W
R567	1-216-017-00	s	METAL, CHIP 47 5% 1/10W
R568	1-216-049-00	s	METAL, CHIP 1K 5% 1/10W
R569	1-216-017-00	s	METAL, CHIP 47 5% 1/10W
R570	1-216-045-00	s	METAL, CHIP 680 5% 1/10W
R571	1-216-621-11	s	METAL 56 0.5% 1/10W
R572	1-216-675-11	s	METAL, CHIP 10K 0.5% 1/10W
R573	1-216-675-11	s	METAL, CHIP 10K 0.5% 1/10W
R574	1-216-017-00	s	METAL, CHIP 47 5% 1/10W
R575	1-216-041-00	s	METAL, CHIP 470 5% 1/10W
R576	1-216-651-11	s	METAL, CHIP 1K 0.5% 1/10W
R577	1-216-657-11	s	METAL, CHIP 1.8K 0.5% 1/10W
R578	1-216-659-11	s	METAL, CHIP 2.2K 0.5% 1/10W
R579	1-216-639-11	s	METAL, CHIP 330 0.5% 1/10W
R580	1-216-639-11	s	METAL, CHIP 330 0.5% 1/10W
R581	1-216-017-00	s	METAL, CHIP 47 5% 1/10W
R582	1-216-041-00	s	METAL, CHIP 470 5% 1/10W
R585	1-216-622-11	s	METAL FILM CHIP 62 0.50% 1/10W
R587	1-216-651-11	s	METAL, CHIP 1K 0.5% 1/10W
R588	1-216-657-11	s	METAL, CHIP 1.8K 0.5% 1/10W
R589	1-216-659-11	s	METAL, CHIP 2.2K 0.5% 1/10W
R590	1-216-639-11	s	METAL, CHIP 330 0.5% 1/10W
R591	1-216-639-11	s	METAL, CHIP 330 0.5% 1/10W
R592	1-216-017-00	s	METAL, CHIP 47 5% 1/10W
R593	1-216-041-00	s	METAL, CHIP 470 5% 1/10W
R596	1-216-622-11	s	METAL FILM CHIP 62 0.50% 1/10W
R598	1-216-049-00	s	METAL, CHIP 1K 5% 1/10W
R599	1-216-049-00	s	METAL, CHIP 1K 5% 1/10W
R600	1-216-049-00	s	METAL, CHIP 1K 5% 1/10W
R602	1-216-049-00	s	METAL, CHIP 1K 5% 1/10W
R604	1-216-643-11	s	METAL, CHIP 470 0.5% 1/10W
R605	1-216-097-00	s	METAL, CHIP 100K 5% 1/10W
R606	1-216-667-11	s	METAL, CHIP 4.7K 0.5% 1/10W
R607	1-216-675-11	s	METAL, CHIP 10K 0.5% 1/10W
R608	1-216-667-11	s	METAL, CHIP 4.7K 0.5% 1/10W
R609	1-216-659-11	s	METAL, CHIP 2.2K 0.5% 1/10W
R610	1-216-651-11	s	METAL, CHIP 1K 0.5% 1/10W
R611	1-216-659-11	s	METAL, CHIP 2.2K 0.5% 1/10W
R612	1-216-057-00	s	METAL, CHIP 2.2K 5% 1/10W
R613	1-216-695-11	s	METAL, CHIP 68K 0.5% 1/10W
R614	1-216-089-00	s	METAL, CHIP 47K 5% 1/10W
R615	1-216-065-00	s	METAL, CHIP 4.7K 5% 1/10W
R616	1-216-065-00	s	METAL, CHIP 4.7K 5% 1/10W
R617	1-216-065-00	s	METAL, CHIP 4.7K 5% 1/10W
R618	1-216-675-11	s	METAL, CHIP 10K 0.5% 1/10W
R619	1-216-057-00	s	METAL, CHIP 2.2K 5% 1/10W
R620	1-216-057-00	s	METAL, CHIP 2.2K 5% 1/10W
R621	1-216-057-00	s	METAL, CHIP 2.2K 5% 1/10W
R622	1-216-689-11	s	METAL, CHIP 39K 0.5% 1/10W
R623	1-216-073-00	s	METAL, CHIP 10K 5% 1/10W
R624	1-216-041-00	s	METAL, CHIP 470 5% 1/10W
R625	1-216-637-11	s	METAL, CHIP 270 0.5% 1/10W

(TBC-17P BOARD)

Ref. No. or Q'ty	Part No.	SP	Description
R626	1-216-057-00	s	METAL, CHIP 2.2K 5% 1/10W
R627	1-216-017-00	s	METAL, CHIP 47 5% 1/10W
R628	1-216-017-00	s	METAL, CHIP 47 5% 1/10W
R629	1-216-089-00	s	METAL, CHIP 47K 5% 1/10W
R630	1-216-065-00	s	METAL, CHIP 4.7K 5% 1/10W
R631	1-216-017-00	s	METAL, CHIP 47 5% 1/10W
R632	1-216-017-00	s	METAL, CHIP 47 5% 1/10W
R633	1-216-017-00	s	METAL, CHIP 47 5% 1/10W
R634	1-216-017-00	s	METAL, CHIP 47 5% 1/10W
R635	1-216-017-00	s	METAL, CHIP 47 5% 1/10W
R636	1-216-017-00	s	METAL, CHIP 47 5% 1/10W
R637	1-216-017-00	s	METAL, CHIP 47 5% 1/10W
R638	1-216-017-00	s	METAL, CHIP 47 5% 1/10W
R639	1-216-017-00	s	METAL, CHIP 47 5% 1/10W
R640	1-216-017-00	s	METAL, CHIP 47 5% 1/10W
R641	1-216-017-00	s	METAL, CHIP 47 5% 1/10W
R642	1-216-017-00	s	METAL, CHIP 47 5% 1/10W
R643	1-216-017-00	s	METAL, CHIP 47 5% 1/10W
R644	1-216-017-00	s	METAL, CHIP 47 5% 1/10W
R645	1-216-017-00	s	METAL, CHIP 47 5% 1/10W
R646	1-216-017-00	s	METAL, CHIP 47 5% 1/10W
R647	1-216-017-00	s	METAL, CHIP 47 5% 1/10W
R648	1-216-017-00	s	METAL, CHIP 47 5% 1/10W
R649	1-216-017-00	s	METAL, CHIP 47 5% 1/10W
R650	1-216-017-00	s	METAL, CHIP 47 5% 1/10W
R651	1-216-295-00	s	METAL, CHIP 0-OHM
R652	1-216-073-00	s	METAL, CHIP 10K 5% 1/10W
R653	1-216-057-00	s	METAL, CHIP 2.2K 5% 1/10W
R654	1-216-073-00	s	METAL, CHIP 10K 5% 1/10W
R655	1-216-073-00	s	METAL, CHIP 10K 5% 1/10W
R656	1-216-073-00	s	METAL, CHIP 10K 5% 1/10W
R657	1-216-081-00	s	METAL, CHIP 22K 5% 1/10W
R658	1-216-081-00	s	METAL, CHIP 22K 5% 1/10W
R660	1-216-295-00	s	METAL, CHIP 0-OHM
R661	1-216-295-00	s	METAL, CHIP 0-OHM
R701	1-216-033-00	s	METAL, CHIP 220 5% 1/10W
R702	1-216-049-00	s	METAL, CHIP 1K 5% 1/10W
R703	1-216-069-00	s	METAL, CHIP 6.8K 5% 1/10W
R704	1-216-049-00	s	METAL, CHIP 1K 5% 1/10W
R706	1-249-425-11	s	CARBON 4.7K 5% 1/4W
R707	1-249-429-11	s	CARBON 10K 5% 1/4W
R711	1-216-089-00	s	METAL, CHIP 47K 5% 1/10W
R712	1-216-017-00	s	METAL, CHIP 47 5% 1/10W
R713	1-216-025-00	s	METAL, CHIP 100 5% 1/10W
R714	1-216-653-11	s	METAL, CHIP 1.2K 0.5% 1/10W
R715	1-216-057-00	s	METAL, CHIP 2.2K 5% 1/10W
R716	1-216-025-00	s	METAL, CHIP 100 5% 1/10W
R717	1-216-121-00	s	METAL, CHIP 1M 5% 1/10W
R718	1-216-121-00	s	METAL, CHIP 1M 5% 1/10W
R719	1-216-025-00	s	METAL, CHIP 100 5% 1/10W
R720	1-216-657-11	s	METAL, CHIP 1.8K 0.5% 1/10W
R721	1-216-049-00	s	METAL, CHIP 1K 5% 1/10W
R722	1-216-657-11	s	METAL, CHIP 1.8K 0.5% 1/10W
R723	1-216-121-00	s	METAL, CHIP 1M 5% 1/10W
R724	1-216-053-00	s	METAL, CHIP 1.5K 5% 1/10W
R725	1-216-053-00	s	METAL, CHIP 1.5K 5% 1/10W
R726	1-216-121-00	s	METAL, CHIP 1M 5% 1/10W
R727	1-216-049-00	s	METAL, CHIP 1K 5% 1/10W
R728	1-216-049-00	s	METAL, CHIP 1K 5% 1/10W

(TBC-17P BOARD)

Ref. No. or Q'ty	Part No.	SP	Description
R729	1-216-057-00	s	METAL, CHIP 2.2K 5% 1/10W
R730	1-216-085-00	s	METAL, CHIP 4.7K 5% 1/10W
R731	1-216-045-00	s	METAL, CHIP 680 5% 1/10W
R732	1-216-065-00	s	METAL, CHIP 4.7K 5% 1/10W
R733	1-216-681-11	s	METAL, CHIP 18K 0.5% 1/10W
R734	1-216-049-00	s	METAL, CHIP 1K 5% 1/10W
R735	1-216-081-00	s	METAL, CHIP 22K 5% 1/10W
R736	1-216-049-00	s	METAL, CHIP 1K 5% 1/10W
R776	1-216-675-11	s	METAL, CHIP 10K 0.5% 1/10W
R777	1-216-675-11	s	METAL, CHIP 10K 0.5% 1/10W
R778	1-216-651-11	s	METAL, CHIP 1K 0.5% 1/10W
R779	1-216-671-11	s	METAL, CHIP 6.8K 0.5% 1/10W
R780	1-216-045-00	s	METAL, CHIP 680 5% 1/10W
R781	1-216-675-11	s	METAL, CHIP 10K 0.5% 1/10W
R783	1-216-081-00	s	METAL, CHIP 22K 5% 1/10W
R784	1-216-041-00	s	METAL, CHIP 470 5% 1/10W
R785	1-216-689-11	s	METAL, CHIP 39K 0.5% 1/10W
R786	1-216-065-00	s	METAL, CHIP 4.7K 5% 1/10W
R787	1-216-295-00	s	METAL, CHIP 0-OHM
R788	1-216-065-00	s	METAL, CHIP 4.7K 5% 1/10W
R789	1-216-295-00	s	METAL, CHIP 0-OHM
R790	1-216-049-00	s	METAL, CHIP 1K 5% 1/10W
R791	1-216-085-00	s	METAL, CHIP 33K 5% 1/10W
R792	1-216-687-11	s	METAL, CHIP 4.7K 0.5% 1/10W
R793	1-216-683-11	s	METAL, CHIP 3.3K 0.5% 1/10W
R794	1-216-057-00	s	METAL, CHIP 2.2K 5% 1/10W
R795	1-216-085-00	s	METAL, CHIP 33K 5% 1/10W
R796	1-216-077-00	s	METAL, CHIP 15K 5% 1/10W
R797	1-216-085-00	s	METAL, CHIP 33K 5% 1/10W
R798	1-216-671-11	s	METAL, CHIP 6.8K 0.5% 1/10W
R799	1-216-033-00	s	METAL, CHIP 220 5% 1/10W
R800	1-216-687-11	s	METAL, CHIP 4.7K 0.5% 1/10W
R801	1-216-687-11	s	METAL, CHIP 4.7K 0.5% 1/10W
R802	1-216-648-11	s	METAL, CHIP 620 0.5% 1/10W
R803	1-216-671-11	s	METAL, CHIP 6.8K 0.5% 1/10W
R804	1-216-097-00	s	METAL, CHIP 100K 5% 1/10W
R805	1-216-675-11	s	METAL, CHIP 10K 0.5% 1/10W
R806	1-216-687-11	s	METAL, CHIP 4.7K 0.5% 1/10W
R807	1-216-683-11	s	METAL, CHIP 22K 0.5% 1/10W
R808	1-216-675-11	s	METAL, CHIP 10K 0.5% 1/10W
R809	1-216-683-11	s	METAL, CHIP 22K 0.5% 1/10W
R810	1-216-669-11	s	METAL, CHIP 5.6K 0.5% 1/10W
R811	1-216-041-00	s	METAL, CHIP 470 5% 1/10W
R812	1-216-681-11	s	METAL, CHIP 18K 0.5% 1/10W
R813	1-216-619-11	s	METAL, CHIP 47 0.5% 1/10W
R814	1-216-663-11	s	METAL, CHIP 3.3K 0.5% 1/10W
R815	1-216-089-00	s	METAL, CHIP 47K 5% 1/10W
R816	1-216-065-00	s	METAL, CHIP 4.7K 5% 1/10W
R822	1-216-041-00	s	METAL, CHIP 470 5% 1/10W
R823	1-216-041-00	s	METAL, CHIP 470 5% 1/10W
R824	1-216-041-00	s	METAL, CHIP 470 5% 1/10W
R825	1-216-041-00	s	METAL, CHIP 470 5% 1/10W
R826	1-216-041-00	s	METAL, CHIP 470 5% 1/10W
R827	1-216-041-00	s	METAL, CHIP 470 5% 1/10W
R828	1-216-041-00	s	METAL, CHIP 470 5% 1/10W
R829	1-216-041-00	s	METAL, CHIP 470 5% 1/10W
R830	1-216-673-11	s	METAL, CHIP 8.2K 0.5% 1/10W
R831	1-216-673-11	s	METAL, CHIP 8.2K 0.5% 1/10W
R832	1-216-663-11	s	METAL, CHIP 3.3K 0.5% 1/10W

(TBC-17P BOARD)

Ref. No. or Q'ty	Part No.	SP	Description
R833	1-216-683-11	s	METAL, CHIP 3.3K 0.5% 1/10W
R834	1-216-843-11	s	METAL, CHIP 470 0.5% 1/10W
R835	1-216-843-11	s	METAL, CHIP 470 0.5% 1/10W
R836	1-216-659-11	s	METAL, CHIP 2.2K 0.5% 1/10W
R837	1-216-659-11	s	METAL, CHIP 2.2K 0.5% 1/10W
R838	1-216-041-00	s	METAL, CHIP 470 5% 1/10W
R839	1-216-041-00	s	METAL, CHIP 470 5% 1/10W
R840	1-216-651-11	s	METAL, CHIP 1K 0.5% 1/10W
R841	1-216-619-11	s	METAL, CHIP 47 0.5% 1/10W
R842	1-216-619-11	s	METAL, CHIP 47 0.5% 1/10W
R843	1-216-651-11	s	METAL, CHIP 1K 0.5% 1/10W
R844	1-216-651-11	s	METAL, CHIP 1K 0.5% 1/10W
R845	1-216-009-00	s	METAL, CHIP 22 5% 1/10W
R846	1-216-057-00	s	METAL, CHIP 2.2K 5% 1/10W
R847	1-216-057-00	s	METAL, CHIP 2.2K 5% 1/10W
R848	1-216-057-00	s	METAL, CHIP 2.2K 5% 1/10W
R849	1-216-057-00	s	METAL, CHIP 2.2K 5% 1/10W
R850	1-216-041-00	s	METAL, CHIP 470 5% 1/10W
R851	1-216-041-00	s	METAL, CHIP 470 5% 1/10W
R852	1-216-041-00	s	METAL, CHIP 470 5% 1/10W
R853	1-216-041-00	s	METAL, CHIP 470 5% 1/10W
R855	1-216-041-00	s	METAL, CHIP 470 5% 1/10W
R856	1-216-041-00	s	METAL, CHIP 470 5% 1/10W
R860	1-216-101-00	s	METAL, CHIP 150K 5% 1/10W
R861	1-216-049-00	s	METAL, CHIP 1K 5% 1/10W
R866	1-216-065-00	s	METAL, CHIP 4.7K 5% 1/10W
R867	1-216-295-00	s	METAL, CHIP 0-OHM
R868	1-216-073-00	s	METAL, CHIP 10K 5% 1/10W
R869	1-216-057-00	s	METAL, CHIP 2.2K 5% 1/10W
R870	1-216-049-00	s	METAL, CHIP 1K 5% 1/10W
R871	1-216-049-00	s	METAL, CHIP 1K 5% 1/10W
R872	1-216-671-11	s	METAL, CHIP 6.8K 0.5% 1/10W
R873	1-216-045-00	s	METAL, CHIP 680 5% 1/10W
R875	1-216-057-00	s	METAL, CHIP 2.2K 5% 1/10W
R876	1-216-057-00	s	METAL, CHIP 2.2K 5% 1/10W
R877	1-216-057-00	s	METAL, CHIP 2.2K 5% 1/10W
R879	1-216-073-00	s	METAL, CHIP 10K 5% 1/10W
R880	1-216-073-00	s	METAL, CHIP 10K 5% 1/10W
R881	1-216-049-00	s	METAL, CHIP 1K 5% 1/10W
R882	1-216-097-00	s	METAL, CHIP 100K 5% 1/10W
R883	1-216-049-00	s	METAL, CHIP 1K 5% 1/10W
R884	1-216-089-00	s	METAL, CHIP 47K 5% 1/10W
R885	1-216-089-00	s	METAL, CHIP 47K 5% 1/10W
R886	1-216-089-00	s	METAL, CHIP 47K 5% 1/10W
RV150	1-238-801-11	s	RES, ADJ METAL 5K
RV151	1-238-801-11	s	RES, ADJ METAL 5K
RV152	1-238-802-11	s	RES, ADJ METAL 10K
RV201	1-238-802-11	s	RES, ADJ METAL 10K
RV300	1-238-804-11	s	RES, ADJ METAL 50K
RV301	1-238-802-11	s	RES, ADJ METAL 10K
RV302	1-238-804-11	s	RES, ADJ METAL 50K
RV303	1-238-801-11	s	RES, ADJ METAL 5K
RV304	1-238-801-11	s	RES, ADJ METAL 5K
RV400	1-238-804-11	s	RES, ADJ METAL 50K
RV401	1-238-801-11	s	RES, ADJ METAL 5K
RV402	1-238-801-11	s	RES, ADJ METAL 5K
RV403	1-238-801-11	s	RES, ADJ METAL 5K
RV404	1-238-801-11	s	RES, ADJ METAL 5K
RV500	1-238-786-11	s	RES, ADJ METAL 5K

(TBC-17P BOARD)

Ref. No. or Q'ty	Part No.	SP	Description
RV501	1-238-786-11	s	RES, ADJ METAL 5K
RV502	1-238-785-11	s	RES, ADJ METAL 2K
RV503	1-238-784-11	s	RES, ADJ METAL 1K
RV504	1-238-784-11	s	RES, ADJ METAL 1K
RV505	1-238-784-11	s	RES, ADJ METAL 1K
RV703	1-238-800-11	s	RES, ADJ METAL 2K
RV704	1-238-801-11	s	RES, ADJ METAL 5K
RV705	1-238-787-11	s	RES, ADJ METAL 10K
RV706	1-238-787-11	s	RES, ADJ METAL 10K
RV707	1-238-787-11	s	RES, ADJ METAL 10K
RV708	1-238-802-11	s	RES, ADJ METAL 10K
RV709	1-238-802-11	s	RES, ADJ METAL 10K
RV710	1-238-787-11	s	RES, ADJ METAL 10K
RV712	1-238-787-11	s	RES, ADJ METAL 10K
S1	1-571-967-11	s	SWITCH, DIP 8-CKT
X500	1-579-459-11	s	CRYSTAL 13.5MHz
X501	1-579-459-11	s	CRYSTAL 13.5MHz
X502	1-579-459-11	s	CRYSTAL 13.5MHz

TR-73 BOARD

Ref. No. or Q'ty	Part No.	SP	Description
1pc	1-640-161-11	o	PRINTED CIRCUIT BOARD, TR-73
1pc	3-171-392-01	s	HOLDER, DME
CN920	1-506-483-21	s	CONNECTOR, 4P, MALE
SS1	8-745-001-07	s	DN-230-1

VR-110 BOARD

Ref. No. or Q'ty	Part No.	SP	Description
1pc	A-6713-464-A	o	MOUNTED CIRCUIT BOARD, VR-110
C101	1-124-477-11	s	ELECT 47uF 20% 25V
C102	1-163-037-11	s	CERAMIC, CHIP 0.022uF 10% 25V
C103	1-124-477-11	s	ELECT 47uF 20% 25V
C104	1-163-037-11	s	CERAMIC, CHIP 0.022uF 10% 25V
C111	1-163-251-11	s	CERAMIC, CHIP 100PF 5% 50V
C112	1-124-477-11	s	ELECT 47uF 20% 25V
C121	1-163-251-11	s	CERAMIC, CHIP 100PF 5% 50V
C122	1-124-477-11	s	ELECT 47uF 20% 25V
C131	1-163-235-11	s	CERAMIC, CHIP 22PF 5% 50V
C132	1-124-477-11	s	ELECT 47uF 20% 25V
C141	1-163-235-11	s	CERAMIC, CHIP 22PF 5% 50V
C142	1-124-477-11	s	ELECT 47uF 20% 25V
CN501	1-506-468-11	s	CONNECTOR, 3P, MALE
CN502	1-580-533-11	s	CONNECTOR, LY 8P, MALE
CN503	1-580-534-11	o	CONNECTOR, LY 10P, MALE
IC111	8-759-106-02	s	IC UPC4570G2
IC112	8-759-106-02	s	IC UPC4570G2
IC113	8-759-982-04	s	IC RC5532M
IC114	8-759-982-04	s	IC RC5532M
R111	1-216-675-11	s	METAL, CHIP 10K 0.5% 1/10W
R112	1-216-675-11	s	METAL, CHIP 10K 0.5% 1/10W
R113	1-216-675-11	s	METAL, CHIP 10K 0.5% 1/10W
R114	1-216-675-11	s	METAL, CHIP 10K 0.5% 1/10W
R115	1-216-677-11	s	METAL, CHIP 12K 0.5% 1/10W
R116	1-216-662-11	s	METAL, CHIP 3K 0.5% 1/10W
R117	1-216-655-11	s	METAL, CHIP 1.5K 0.5% 1/10W
R118	1-216-676-11	s	METAL, CHIP 11K 0.5% 1/10W
R119	1-216-679-11	s	METAL, CHIP 15K 0.5% 1/10W
R121	1-216-675-11	s	METAL, CHIP 10K 0.5% 1/10W
R122	1-216-675-11	s	METAL, CHIP 10K 0.5% 1/10W
R123	1-216-675-11	s	METAL, CHIP 10K 0.5% 1/10W
R124	1-216-675-11	s	METAL, CHIP 10K 0.5% 1/10W
R125	1-216-677-11	s	METAL, CHIP 12K 0.5% 1/10W
R126	1-216-662-11	s	METAL, CHIP 3K 0.5% 1/10W
R127	1-216-655-11	s	METAL, CHIP 1.5K 0.5% 1/10W
R128	1-216-676-11	s	METAL, CHIP 11K 0.5% 1/10W
R129	1-216-679-11	s	METAL, CHIP 15K 0.5% 1/10W
R131	1-216-675-11	s	METAL, CHIP 10K 0.5% 1/10W
R132	1-216-675-11	s	METAL, CHIP 10K 0.5% 1/10W
R133	1-216-675-11	s	METAL, CHIP 10K 0.5% 1/10W
R134	1-216-675-11	s	METAL, CHIP 10K 0.5% 1/10W
R135	1-216-677-11	s	METAL, CHIP 12K 0.5% 1/10W
R136	1-216-662-11	s	METAL, CHIP 3K 0.5% 1/10W
R137	1-216-655-11	s	METAL, CHIP 1.5K 0.5% 1/10W
R138	1-216-690-11	s	METAL, CHIP 43K 0.5% 1/10W
R139	1-216-679-11	s	METAL, CHIP 15K 0.5% 1/10W
R141	1-216-675-11	s	METAL, CHIP 10K 0.5% 1/10W
R142	1-216-675-11	s	METAL, CHIP 10K 0.5% 1/10W
R143	1-216-675-11	s	METAL, CHIP 10K 0.5% 1/10W
R144	1-216-675-11	s	METAL, CHIP 10K 0.5% 1/10W
R145	1-216-677-11	s	METAL, CHIP 12K 0.5% 1/10W
R146	1-216-662-11	s	METAL, CHIP 3K 0.5% 1/10W
R147	1-216-655-11	s	METAL, CHIP 1.5K 0.5% 1/10W
R148	1-216-690-11	s	METAL, CHIP 43K 0.5% 1/10W
R149	1-216-679-11	s	METAL, CHIP 15K 0.5% 1/10W

(VR-110 BOARD)

Ref. No. or Q'ty	Part No.	SP	Description
RV111	1-241-248-11	s	RES, VAR (WITH SW) CARBON 10K
RV121	1-241-248-11	s	RES, VAR (WITH SW) CARBON 10K
RV131	1-241-248-11	s	RES, VAR (WITH SW) CARBON 10K
RV141	1-241-248-11	s	RES, VAR (WITH SW) CARBON 10K

VR-111 BOARD

Ref. No. or Q'ty	Part No.	SP	Description
1pc	A-6713-463-A	o	MOUNTED CIRCUIT BOARD, VR-111
C211	1-163-227-11	s	CERAMIC, CHIP 10PF 5% 50V
C212	1-124-477-11	s	ELECT 47uF 20% 25V
C221	1-163-227-11	s	CERAMIC, CHIP 10PF 5% 50V
C222	1-124-477-11	s	ELECT 47uF 20% 25V
C231	1-163-227-11	s	CERAMIC, CHIP 10PF 5% 50V
C232	1-124-477-11	s	ELECT 47uF 20% 25V
C241	1-163-227-11	s	CERAMIC, CHIP 10PF 5% 50V
C242	1-124-477-11	s	ELECT 47uF 20% 25V
CN504	1-506-468-11	s	CONNECTOR, 3P, MALE
CN505	1-580-533-11	s	CONNECTOR, LY 8P, MALE
CN506	1-580-534-11	o	CONNECTOR, LY 10P, MALE
CN507	1-506-468-11	s	CONNECTOR, 3P, MALE
IC211	8-759-106-02	s	IC UPC4570G2
IC212	8-759-106-02	s	IC UPC4570G2
IC213	8-759-982-04	s	IC RC5532M
IC214	8-759-982-04	s	IC RC5532M
R211	1-216-675-11	s	METAL, CHIP 10K 0.5% 1/10W
R212	1-216-675-11	s	METAL, CHIP 10K 0.5% 1/10W
R213	1-216-675-11	s	METAL, CHIP 10K 0.5% 1/10W
R214	1-216-675-11	s	METAL, CHIP 10K 0.5% 1/10W
R215	1-216-683-11	s	METAL, CHIP 22K 0.5% 1/10W
R216	1-216-675-11	s	METAL, CHIP 10K 0.5% 1/10W
R217	1-216-651-11	s	METAL, CHIP 1K 0.5% 1/10W
R218	1-216-659-11	s	METAL, CHIP 2.2K 0.5% 1/10W
R219	1-216-683-11	s	METAL, CHIP 22K 0.5% 1/10W
R221	1-216-675-11	s	METAL, CHIP 10K 0.5% 1/10W
R222	1-216-675-11	s	METAL, CHIP 10K 0.5% 1/10W
R223	1-216-675-11	s	METAL, CHIP 10K 0.5% 1/10W
R224	1-216-675-11	s	METAL, CHIP 10K 0.5% 1/10W
R225	1-216-683-11	s	METAL, CHIP 22K 0.5% 1/10W
R226	1-216-675-11	s	METAL, CHIP 10K 0.5% 1/10W
R227	1-216-651-11	s	METAL, CHIP 1K 0.5% 1/10W
R228	1-216-659-11	s	METAL, CHIP 2.2K 0.5% 1/10W
R229	1-216-683-11	s	METAL, CHIP 22K 0.5% 1/10W
R231	1-216-675-11	s	METAL, CHIP 10K 0.5% 1/10W
R232	1-216-675-11	s	METAL, CHIP 10K 0.5% 1/10W
R233	1-216-675-11	s	METAL, CHIP 10K 0.5% 1/10W
R234	1-216-675-11	s	METAL, CHIP 10K 0.5% 1/10W
R235	1-216-683-11	s	METAL, CHIP 22K 0.5% 1/10W
R236	1-216-675-11	s	METAL, CHIP 10K 0.5% 1/10W
R237	1-216-651-11	s	METAL, CHIP 1K 0.5% 1/10W
R238	1-216-659-11	s	METAL, CHIP 2.2K 0.5% 1/10W
R239	1-216-683-11	s	METAL, CHIP 22K 0.5% 1/10W
R241	1-216-675-11	s	METAL, CHIP 10K 0.5% 1/10W
R242	1-216-675-11	s	METAL, CHIP 10K 0.5% 1/10W
R243	1-216-675-11	s	METAL, CHIP 10K 0.5% 1/10W
R244	1-216-675-11	s	METAL, CHIP 10K 0.5% 1/10W
R245	1-216-683-11	s	METAL, CHIP 22K 0.5% 1/10W
R246	1-216-675-11	s	METAL, CHIP 10K 0.5% 1/10W
R247	1-216-651-11	s	METAL, CHIP 1K 0.5% 1/10W
R248	1-216-659-11	s	METAL, CHIP 2.2K 0.5% 1/10W
R249	1-216-683-11	s	METAL, CHIP 22K 0.5% 1/10W
RV211	1-241-248-11	s	RES, VAR (WITH SW) CARBON 10K
RV221	1-241-248-11	s	RES, VAR (WITH SW) CARBON 10K
RV231	1-241-248-11	s	RES, VAR (WITH SW) CARBON 10K
RV241	1-241-248-11	s	RES, VAR (WITH SW) CARBON 10K

VR-119 BOARD

Ref. No. or Q'ty	Part No.	SP	Description
1pc	1-640-696-11	o	PRINTED CIRCUIT BOARD, VR-119
CN574	1-506-473-11	s	CONNECTOR, 8P, MALE
RV1	1-241-578-11	s	RES, VAR CARBON 10K/10K

FRAME

Ref. No. or Q'ty	Part No.	SP	Description
1pc	A-6050-854-A	s	HEAD DRUM ASS'Y,DBH-30A-R
1pc	A-6050-863-A	s	MOUNTED CIRCUIT BOARD,PA-109
1pc	A-6782-468-A	s	DRUM ASS'Y, UPPER,DBR-30-R
1pc	--PENDING---	s	BRUSH ASS'Y
1pc	⚠ 1-413-675-11	s	REGULATOR, SWITCHING
2pcs	1-559-907-11	o	WIRE, FLEXIBLE CARD (DR-118B TO DM-82)
1pc	1-690-106-11	s	WIRE, FLEXIBLE CARD (5P) (KY-206 TO KY-118D)
1pc	1-690-255-11	o	WIRE ASS'Y, FLAT TYPE (30 CORE) (SWC-11 TO MB-394)
1pc	1-806-682-71	s	SENSOR, DEW CONDENSATION
CB001	⚠ 1-576-036-11	s	BREAKER, CIRCUIT
CN001	⚠ 1-580-375-21	o	INLET 3P

CN1F (to Drum Motor)
1-580-938-11 o HOUSING, 15P
1-569-191-21 o CONTACT, FEMALE AWG22-26

CN1F (to PTC-39 board)
1-562-151-11 o HOUSING, 6P
1-564-026-11 o CONTACT, FEMALE AWG26-30

CN1F (to Switching Reg.)
⚠ 1-562-285-11 o HOUSING, 4P
⚠ 1-562-210-11 o CONTACT, FEMALE AWG18-22

CN1F (to AH-34 board)
1-569-199-11 o HOUSING, 5P
1-569-193-11 o CONTACT, FEMALE AWG24-30

CN1F (to DD-17 board)
1-562-259-00 o HOUSING, 12P
1-562-260-11 o CONTACT, FEMALE AWG24-28

CN2F (to RP-53P board)
1-569-196-11 o HOUSING, 3P
1-569-194-11 o CONTACT, FEMALE AWG24-30

CN2F (to Switching Reg.)
1-562-286-11 o HOUSING, 5P
1-562-210-11 o CONTACT, FEMALE AWG18-22

CN3F (to Switching Reg.)
1-562-833-11 o HOUSING, 7P
1-562-210-11 o CONTACT, FEMALE AWG18-22

CN4F (to Switching Reg.)
1-562-287-11 o HOUSING, 6P
1-562-210-11 o CONTACT, FEMALE AWG18-22

CN31F (to RP-53P board)
1-569-196-11 o HOUSING, 3P
1-569-193-11 o CONTACT, FEMALE AWG24-30
1-569-191-11 o CONTACT, FEMALE AWG22-26

CN41F (to RP-53P board)
1-569-196-11 o HOUSING, 3P
1-569-193-11 o CONTACT, FEMALE AWG24-30
1-569-191-11 o CONTACT, FEMALE AWG22-26

CN51F (to RP-53P board)
1-569-197-11 o HOUSING, 4P
1-569-193-11 o CONTACT, FEMALE AWG24-30
1-569-191-11 o CONTACT, FEMALE AWG22-26

(FRAME)

Ref. No. or Q'ty	Part No.	SP	Description

CN61F (to RP-53P board)
1-569-197-11 o HOUSING, 4P
1-569-193-11 o CONTACT, FEMALE 24-30

CN71F (to RP-53P board)
1-569-196-41 o HOUSING, 3P
1-569-193-11 o CONTACT, FEMALE AWG24-30
1-569-191-11 o CONTACT, FEMALE AWG22-26

CN100 1-568-319-11 o D-SUB 15P (M), "TBC REMOTE"

CN101F (to RP-53P board)
1-569-196-11 o HOUSING, 3P
1-569-194-11 o CONTACT, FEMALE AWG24-30

CN102 1-569-719-11 o CONNECTOR 36P (F), "REMOTE 2"

CN102F (to RP-53P board)
1-569-196-11 o HOUSING, 3P
1-569-194-11 o HOUSING, FEMALE AWG24-30

CN103 1-563-770-11 s D-SUB 9P (F), "REMOTE 1 OUT"

CN104 1-563-770-11 s D-SUB 9P (F), "REMOTE 1 IN"

CN105 1-563-771-11 s D-SUB 15P(F), "KY REMOTE"

CN280F (to MB-394 board)
1-562-258-11 o HOUSING, 10P
1-562-260-11 o CONTACT, SOCKET

CN287F (to MB-394 board)
1-569-204-11 o HOUSING, 11P
1-569-193-11 o CONTACT, FEMALE AWG24-30

CN300F (to DR-118B board)
1-562-258-11 o HOUSING, 10P
1-562-260-11 o CONTACT, SOCKET

CN315F (to DR-118B board)
1-569-196-11 o HOUSING, 3P
1-569-193-21 o CONTACT, FEMALE AWG24-30
1-569-191-21 o CONTACT, FEMALE AWG22-26

CN322F (to KY-188B board)
1-562-151-11 o HOUSING, 6P
1-564-026-11 o CONTACT, FEMALE AWG26-30

CN323F (to DR-118B board)
1-569-196-11 o HOUSING, 3P
1-569-193-21 o CONTACT, FEMALE AWG24-30
1-569-191-21 o CONTACT, FEMALE AWG22-26

CN330F (to DR-118B board)
1-569-196-11 o HOUSING, 3P
1-569-193-21 o CONTACT, FEMALE AWG24-30
1-569-191-21 o CONTACT, FEMALE AWG22-26

CN350F (to DR-118B board)
1-569-199-11 o HOUSING, 6P
1-569-194-11 o CONTACT, FEMALE AWG24-30

CN352F (to DR-118B board)
1-562-259-00 o HOUSING, 12P
1-562-260-11 o CONTACT, FEMALE AWG24-28

CN390F (to DT-29 board)
1-569-204-11 o HOUSING, 11P
1-569-193-11 o CONTACT, FEMALE AWG24-30

(FRAME)

Ref. No. or Q'ty	Part No.	SP	Description
CN391F (to DT-29 board)			
	1-569-201-11	o	HOUSING, 8P
	1-569-194-11	o	CONTACT, FEMALE AWG24-30
CN421 ⚠	1-562-285-11	o	HOUSING, CONNECTOR 4P
⚠	1-562-210-11	o	CONTACT, CONNECTOR
CN927F (to RM-82 board)			
	1-562-149-11	o	HOUSING, 4P
	1-564-026-11	o	CONTACT, FEMALE AWG26-30
CN935F (to CL-25 board)			
	1-569-198-11	o	HOUSING, 3P
	1-569-193-21	o	CONTACT, FEMALE AWG24-30
CN961F (to SR-52 board)			
	1-569-201-11	o	HOUSING, 8P
	1-569-194-11	o	CONTACT, FEMALE AWG24-30
CN965F (to Drum Motor)			
	1-569-199-11	o	HOUSING, 6P
	1-569-194-11	o	CONTACT, FEMALE AWG24-30
CN968F (to Head Drum)			
	1-569-199-11	o	HOUSING, 6P
	1-569-194-11	o	CONTACT, FEMALE AWG24-30
CN969F (to Head Drum)			
	1-569-199-11	o	HOUSING, 6P
	1-569-194-11	o	CONTACT, FEMALE AWG24-30
	1-569-192-11	o	CONTACT, FEMALE AWG22-26
H001	8-825-770-72	s	HEAD, FE EF291-21 "FE"
H002	8-825-771-11	s	HEAD, PS244-2103C "CONF"
H003	8-825-778-41	s	HEAD, PS244-21C "CTL"
H004	8-825-776-71	s	HEAD, MAGNETIC EPS244-2103F "AUDIO/TIME CODE"
L001	1-543-316-31	s	HEAD, SENSING (SMALL TYPE) "TAPE END"
L002	1-543-316-31	s	HEAD, SENSING (SMALL TYPE) "TAPE BIGIN"
M001	1-541-431-31	s	MOTOR, DC "FAN"
M002	8-835-179-01	s	MOTOR, DC MCB2B15 "THREADING"
M003	8-875-179-01	s	MOTOR, DC MCB2B15 "POSITION"
M004	8-879-179-01	s	MOTOR, DC MCB2B15 "CASSITE UP/DOWN"
M005	8-835-080-02	s	MOTOR, DC (MNR-5000A) "S-REEL"
M006	8-835-080-02	s	MOTOR, DC (MNR-5000A) "T-REEL"
M007	8-835-445-01	s	MOTOR, DC SCV-0301A "CAPSTAN"
ME001	1-520-494-21	s	METER, LEVEL "VIDEO METER"
ME002	1-520-496-11	s	METER (VFD), "LEVEL, AUDIO"
PM001	1-454-372-11	s	SOLENOID, "CLEANER"
PM002	1-454-336-00	s	SOLENOID, "PINCH"
PM003	1-454-417-41	s	SOLENOID, "S-BRAKE"
PM004	1-454-417-41	s	SOLENOID, "T-BRAKE"
S001 ⚠	1-570-117-11	s	SWITCH, SEESAW (AC POWER) "POWER"

PACKING MATERIALS & SUPPLIED ACCESSORIES

Ref. No. or Q'ty	Part No.	SP	Description
1pc	A-6766-389-A	o	MOUNTED CIRCUIT BOARD, EX-286
1pc	A-6766-390-A	o	MOUNTED CIRCUIT BOARD, EX-347
1pc	1-555-873-13	o	CABLE, 9P (REMOTE CONTROL)
1pc ⚠	1-590-910-11	s	CORD, POWER 3P
1pc	3-721-888-01	o	SPACER (SIDE)
1pc	3-721-889-01	o	SLEEVE (A)
1pc	3-721-890-01	o	SLEEVE (B)
1pc	3-721-891-01	o	SPACER (A)
1pc	3-721-892-01	o	SPACER (B)
4pcs	7-682-965-01	s	SCREW +PSW 4X16

OPTIONAL FIXTURE

Part No.	SP	Description
A-6766-389-A	o	EXTENTION BOARD (L), EX-286
J-6001-820-A	o	DRUM ECCENTRICITY GAUGE (3)
J-6001-830-A	o	DRUM ECCENTRICITY GAUGE (2)
J-6001-840-B	o	DRUM ECCENTRICITY GAUGE (1)
J-6031-820-A	o	MULTI CONNECTOR CABLE (81BNC)
J-6031-830-A	o	MULTI CONNECTOR CABLE (80BNC)
J-6035-070-A	o	EXTRACTION TOOL (for PLCC socket)
J-6080-008-A	o	CASSETTE REFERENCE PLATE
J-6080-011-A	o	REEL TABLE TENSION GAUGE
J-6080-029-A	o	ADJUSTMENT MIRROR
J-6080-840-A	o	ADJUSTMENT MIRROR
J-6086-570-A	o	REFERENCE FLAT PLATE
J-6087-000-A	o	DRUM ECCENTRICITY GAUGE (5)
J-6150-960-A	o	REEL MOTOR SHAFT SLANTNESS CHECK FIXTURE
J-6152-450-A	o	WIRE CLEARANCE GAUGE
J-6320-680-A	o	REEL TABLE HEIGHT GAUGE
J-6320-870-A	o	REEL MOTOR SHAFT SLANTNESS CHECK FIXTURE
J-6320-880-A	o	CASSETTE BASE PLATE (L)
J-6321-500-A	o	TAPE GUIDE ADJUSTMENT DRIVER
J-6325-530-A	o	DRUM ECCENTRICITY GAUGE (5)
J-6327-930-A	o	TENSION MEASUREMENT TAPE
J-6338-130-A	o	EXTENTION BOARD (S), EX-287
J-6327-850-A	o	DIAL TENSION GAUGE (50g)
2-034-697-00	o	CLEANING PIECE
7-661-018-18	o	OIL
7-662-001-41	o	MOLYTON GREASE, NO.320 (30g bottle)
7-662-010-04	o	GREASE, SGL-506 (20g)
7-700-738-01	o	L-SHAPED HEXAGONAL WRENCH (d:1.27mm)
7-700-736-05	o	L-SHAPED HEXAGONAL WRENCH (d:1.5mm)
7-700-736-06	o	L-SHAPED HEXAGONAL WRENCH (d:0.89mm)
7-732-050-20	o	TENSION SCALE (50g full scale)
7-732-050-30	o	TENSION SCALE (100g full scale)
8-960-096-51	o	ALIGNMENT TAPE, CR2-1B PS
8-960-096-91	o	ALIGNMENT TAPE, CR5-1B PS
8-960-098-37	o	ALIGNMENT TAPE, CR5-1A PS
8-960-096-86	o	ALIGNMENT TAPE, CR8-1B PS
9-911-053-00	o	THICKNESS GAUGE
9-919-573-01	o	CLEANING FLUID
STANDARD		TENTELOMETER (TZ-H7-DMC)
PRODUCTS		